© Siemens AG 2015

SIEMENS

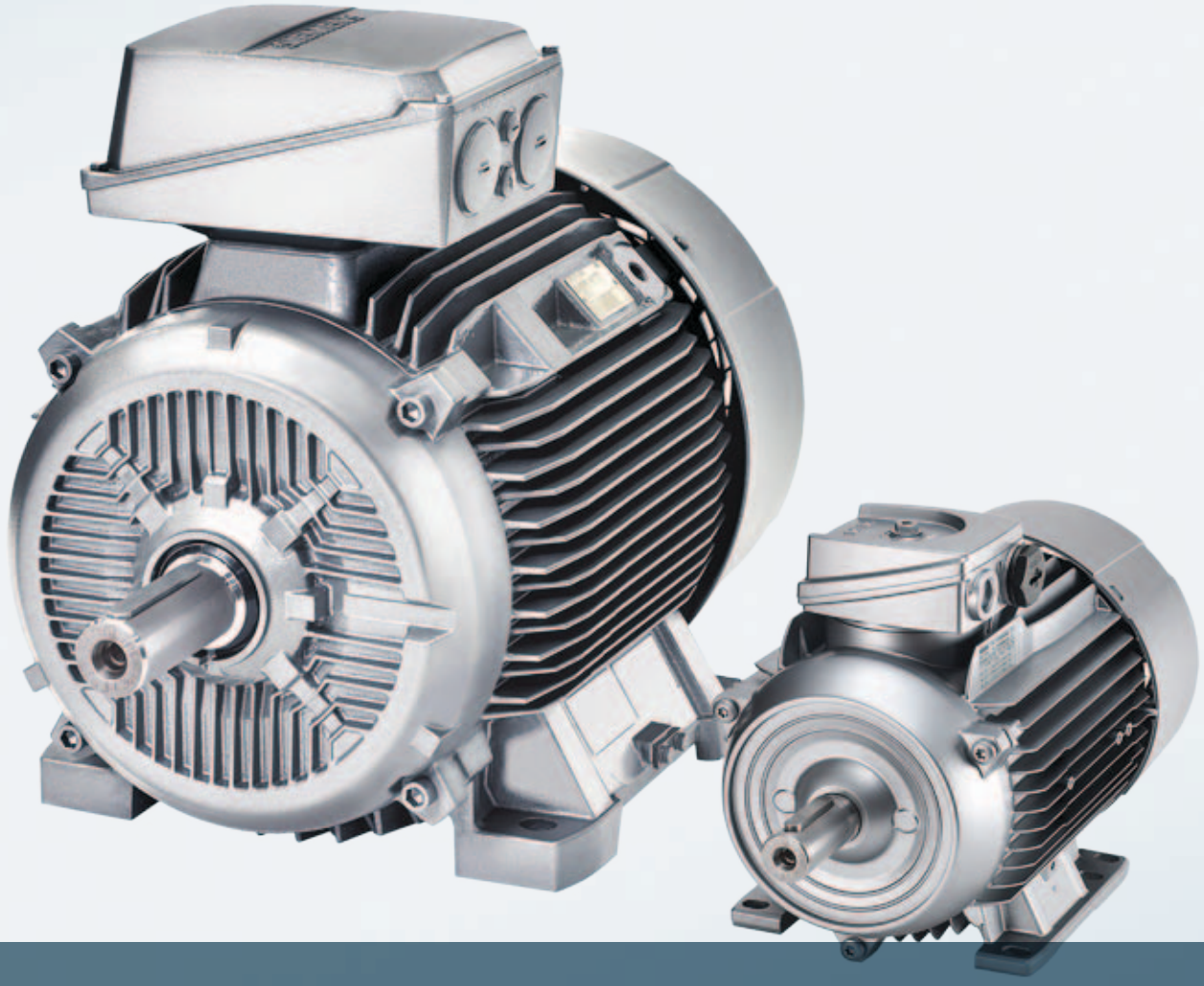

SIMOTICS GP, SD, XP, DP
Low-Voltage Motors

Type series 1LE1, 1MB1 and 1PC1
Frame sizes 71 to 315 · Power range 0.18 to 200 kW

Motors

Catalog
D 81.1

Edition
2015

© Siemens AG 2015

Related catalogs

SIMOTICS Standard/Reluctance Motors VSD10/VSD4000 Line D 81.1 AO

PDF



LOHER Low-Voltage Motors D 83.1
Type series 1MD5, 1PS0, 1PS1, 1PS4 and 1PS5
Frame sizes 71 to 500
Power range 0.25 to 1400 kW
E86060-K5583-A111-A2-7600



SIMOTICS FD D 81.8
Flexible Duty Motors

PDF (E86060-K5581-A181-A3-7600)



SIMOTICS NEMA Motors D 81.2
Low Voltage AC Motors
Selection and Pricing Guide

Further details available on the Internet at:
www.usa.siemens.com/motors



SINAMICS G130 D 11
Drive Converter Chassis Units
SINAMICS G150
Drive Converter Cabinet Units

E86060-K5511-A101-A6-7600



Motion Control PM 21
SIMOTION, SINAMICS S120 & SIMOTICS
Equipment for Production Machines

E86060-K4921-A101-A3-7600



SINAMICS S120 D 21.3
Chassis Format Units
and Cabinet Modules
SINAMICS S150
Converter Cabinet Units
PDF (E86060-K5521-A131-A4-7600)



Motion Control Drives D 31
SINAMICS Inverters for Single-Axis Drives
and SIMOTICS Motors

E86060-K5531-A101-A2-7600



Products for Automation and Drives CA 01
Interactive Catalog, DVD

E86060-D4001-A510-D6-7600



Mall
Information and ordering platform
on the Internet

www.siemens.com/industrymall



All catalogs and other information material, such as brochures, manuals and operating instructions for standard drive systems are available up-to-date on the Internet at the following address:
www.siemens.com/drives/catalogs

The listed documentation can be ordered here or it is available in commonly used file formats (PDF, ZIP) for downloading.

SinaSave energy saving/energy efficiency tool

Further information on the subject of energy saving and the SinaSave energy efficiency tool is available at the following address:
www.automation.siemens.com/sinasave

SIMOTICS EE-COMPARATOR:
www.siemens.com/simotics-ee-comparator

Interactive catalog CA 01 – Drive Technology Configurator

The **Drive Technology Configurator** (DT Configurator) is available in conjunction with the electronic catalog CA 01 on DVD.



In addition, the DT Configurator can be used on the Internet without requiring any installation.
The DT Configurator can be found in the Industry Mall at the following address:
www.siemens.com/dt-configurator

The Drive Technology Configurator for gear units, motors, mechanical components, converters, connection systems, control and licenses and system configuration can be found in the CA 01 main menu, under drive systems, selection and engineering tools.

- Data sheets in up to 7 languages in PDF or RTF format
- 2D/3D dimensional drawings in various formats
- Terminal box drawing and terminal connection diagram
- Operating instructions
- Certificates
- Start-up calculation for SIMOTICS motors
- EPLAN macros

System requirements for CA 01 installation with Drive Technology Configurator

- PC with 2 GHz CPU or faster
- 1 GB RAM (or 2 GB RAM when product configurators are installed)
- Windows XP Service Pack 2 / Windows Vista / Windows 7 / Windows 8
- Screen resolution 1024 x 768 pixels or higher (1280 x 1024 recommended)
- 6.5 GB of free hard disk space (full installation)
- 1.6 GB of free hard disk space for each additional data package (optional)

Installation

The CA 01 catalog can be directly installed on the hard disk or in the network from the DVD as a partial or full version.

Copper surcharges

The metal factors that are applicable for the copper surcharges are specified in the headers of the current Price List D 81.1 P. Further information about "Metal surcharges" can be found in the appendix to this catalog.

© Siemens AG 2015

SIMOTICS GP, SD, XP, DP Low-Voltage Motors

Type series 1LE1, 1MB1 and 1PC1

Motors

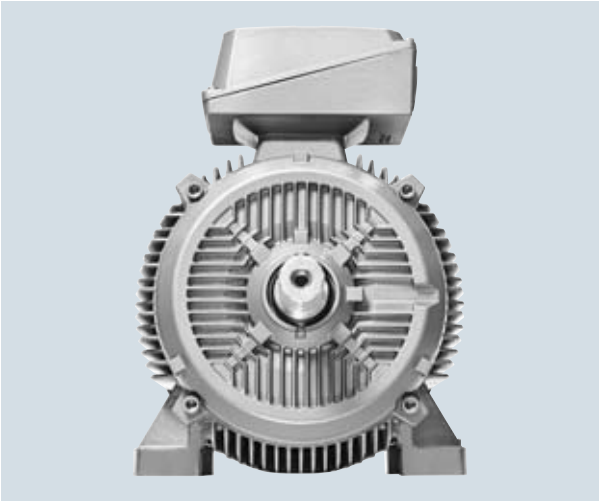

Catalog D 81.1 · 2015

Supersedes:
Catalog D 81.1 · 2014

Refer to the Industry Mall for current updates of this catalog:
www.siemens.com/industrymall

The products contained in this catalog can also be found in the Interactive Catalog CA 01.
Article No.: E86060-D4001-A510-D6-7600

Please contact your local Siemens branch.

© Siemens AG 2015

Introduction 1
General information regarding efficiency in accordance with International Efficiency,
Guide to selecting and ordering the motors,
General technical specifications

SIMOTICS GP/SD 1LE1/1PC1 Standard Motors 2

SIMOTICS GP/SD VSD10 Line/VSD4000 Line
Standard Motors for Converter Operation 3
(available soon)

SIMOTICS XP 1MB1 Explosion-Proof Motors 4

SIMOTICS DP Application-Specific Motors 5
- SIMOTICS GP/SD smoke-extraction motors
- SIMOTICS GP/SD/XP marine motors
- SIMOTICS DP 1PC14 steel plant motors

Appendix 6
NEMA motors, Service & Support, Partners,
Online Services, Tools and engineering, Indexes,
Metal surcharges, Conditions of sale and delivery,
Export regulations

PEFC™
PEFC/04-31-0835

Printed on paper from sustainably managed forests and controlled sources.

www.pefc.org

IQNet

The products and systems described in this catalog are manufactured/distributed under application of a certified quality management system in accordance with EN ISO 9001 (Certified Registration No. DE-000357 QM). The certificate is recognized by all IQNet countries.

© Siemens AG 2015

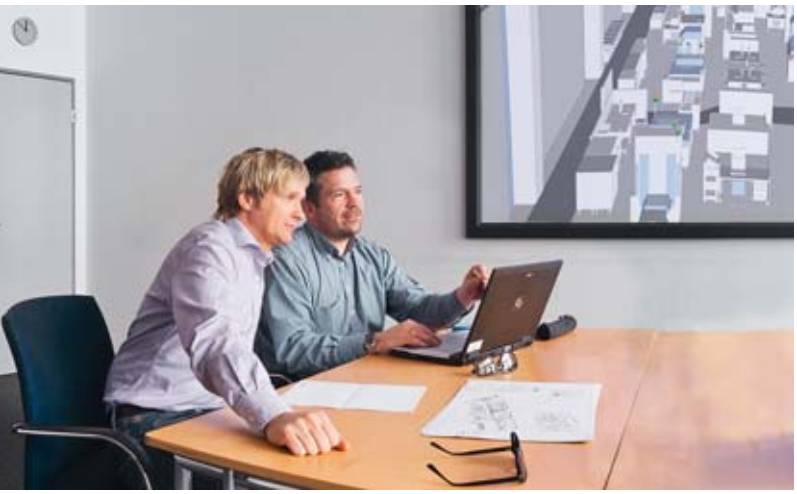





© Siemens AG 2015



Answers for industry.

Integrated technologies, vertical market expertise and services for greater productivity, energy efficiency, and flexibility.

Siemens is the world's leading supplier of innovative and environmentally friendly products and solutions for industrial companies. End-to-end automation technology and industrial software, solid market expertise, and technology-based services are the levers we use to increase our customers' productivity, efficiency and flexibility.

We consistently rely on integrated technologies and, thanks to our bundled portfolio, we can respond more quickly and flexibly to our customers' wishes. With our globally unmatched range of automation technology, industrial control and drive technology as well as industrial software, we equip companies with exactly what they need over their entire value chain – from product design and development to production, sales and service. Our industrial customers benefit from our comprehensive portfolio, which is tailored to their market and their needs.

Market launch times can be reduced by up to 50% due to the combination of powerful automation technology and industrial software. At the same time, the costs for energy or waste water for a manufacturing company can be reduced significantly. In this way, we increase our customers' competitive strength and make an important contribution to environmental protection with our energy-efficient products and solutions.

© Siemens AG 2015

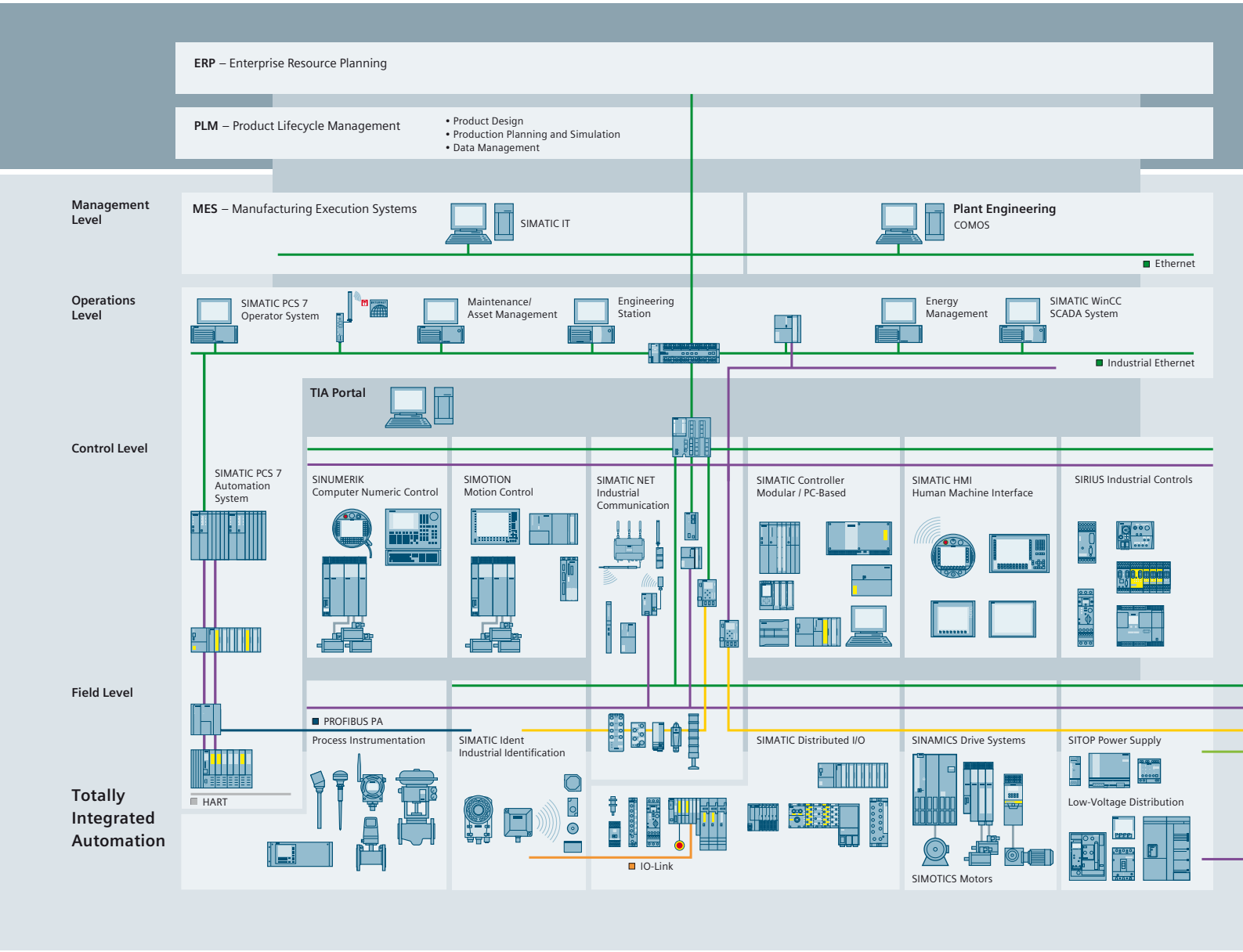

Efficient automation starts with efficient engineering.

Totally Integrated Automation: Efficiency driving productivity.

Efficient engineering is the first step toward better production that is faster, more flexible, and more intelligent. With all components interacting efficiently, Totally Integrated Automation (TIA) delivers enormous time savings right from the engineering phase. The result is lower costs, faster time-to-market, and greater flexibility.

© Siemens AG 2015

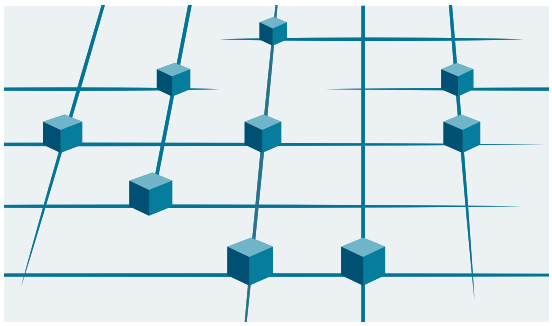

Totally Integrated Automation
Efficient interoperability of all automation components



A unique complete approach for all industries

As one of the world's leading automation suppliers, Siemens provides an integrated, comprehensive portfolio for all requirements in process and manufacturing industries. All components are mutually compatible and system-tested. This ensures that they reliably perform their tasks in industrial use and interact efficiently, and that each automation solution can be implemented with little time and effort based on standard products. The integration of many separate individual engineering tasks into a single engineering environment, for example, provides enormous time and cost savings.

With its comprehensive technology and industry-specific expertise, Siemens is continuously driving progress in manufacturing industries – and Totally Integrated Automation plays a key role.

Totally Integrated Automation creates real value added in all automation tasks, especially for:

- **Integrated engineering**
  Consistent, comprehensive engineering throughout the entire product development and production process
- **Industrial data management**
  Access to all important data occurring in productive operation – along the entire value chain and across all levels
- **Industrial communication**
  Integrated communication based on international cross-vendor standards that are mutually compatible
- **Industrial security**
  Systematic minimization of the risk of an internal or external attack on plants and networks
- **Safety Integrated**
  Reliable protection of personnel, machinery, and the environment thanks to seamless integration of safety technologies into the standard automation

Making things right with Totally Integrated Automation

Totally Integrated Automation, industrial automation from Siemens, stands for the efficient interoperability of all automation components. The open system architecture covers the entire production process and is based on end-to-end shared characteristics: consistent data management, global standards, and uniform hardware and software interfaces.

Totally Integrated Automation lays the foundation for comprehensive optimization of the production process:

- Time and cost savings due to efficient engineering
- Minimized downtime due to integrated diagnostic functions
- Simplified implementation of automation solutions due to global standards
- Better performance due to interoperability of system-tested components

© Siemens AG 2015



Totally Integrated Power
We bring power to the point – safely and reliably.

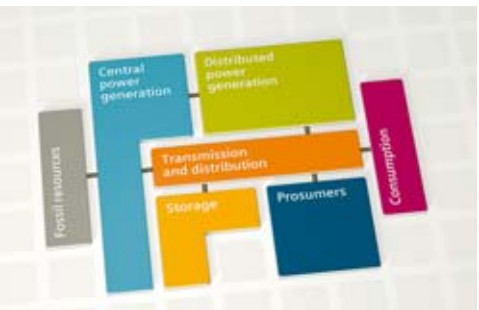

Comprehensive answers for power distribution in complex energy systems – from Siemens

Efficient, reliable, safe: These are the demands placed on electrification and especially power distribution. And our answer – for all application areas of the energy system – is Totally Integrated Power (TIP). It's based on our comprehensive range of products, systems, and solutions for low and medium voltage, rounded out by our support throughout the entire lifecycle – from planning with our own software tools to installation, operation, and services.

Smart interfaces allow linking to industrial or building automation, making it possible to fully exploit all the optimization potential of an integrated solution. This is how we provide our customers around the world with answers to their challenges. With highly efficient, reliable, and safe power distribution, we lay the foundation for sustainable infrastructure and cities, buildings, and industrial plants. We bring power to the point – wherever and whenever it is needed.

More information: www.siemens.com/tip

© Siemens AG 2015

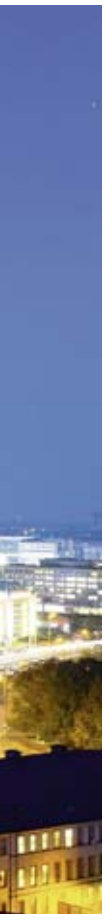

Totally Integrated Power offers more:

- **Consistency**:
  For simplified plant engineering and commissioning as well as smooth integration into automation solutions for building or production processes
- **One-stop-shop**:
  A reliable partner with a complete portfolio for the entire process and lifecycle – from the initial idea to after-sales service
- **Safety**:
  A comprehensive range of protection components for personnel safety and line and fire protection, safety by means of type testing
- **Reliability**:
  A reliable partner who works with customers to develop long-lasting solutions that meet the highest quality standards
- **Efficiency**:
  Bringing power to the point means greater plant availability and maximum energy efficiency in power distribution
- **Flexibility**:
  End-to-end consistency and modular design of Totally Integrated Power for any desired expansions and adaptation to future requirements
- **Advanced technology**:
  Reliable power distribution especially for applications in which supply is critical, continuous refinement of the technology

Challenges are our speciality

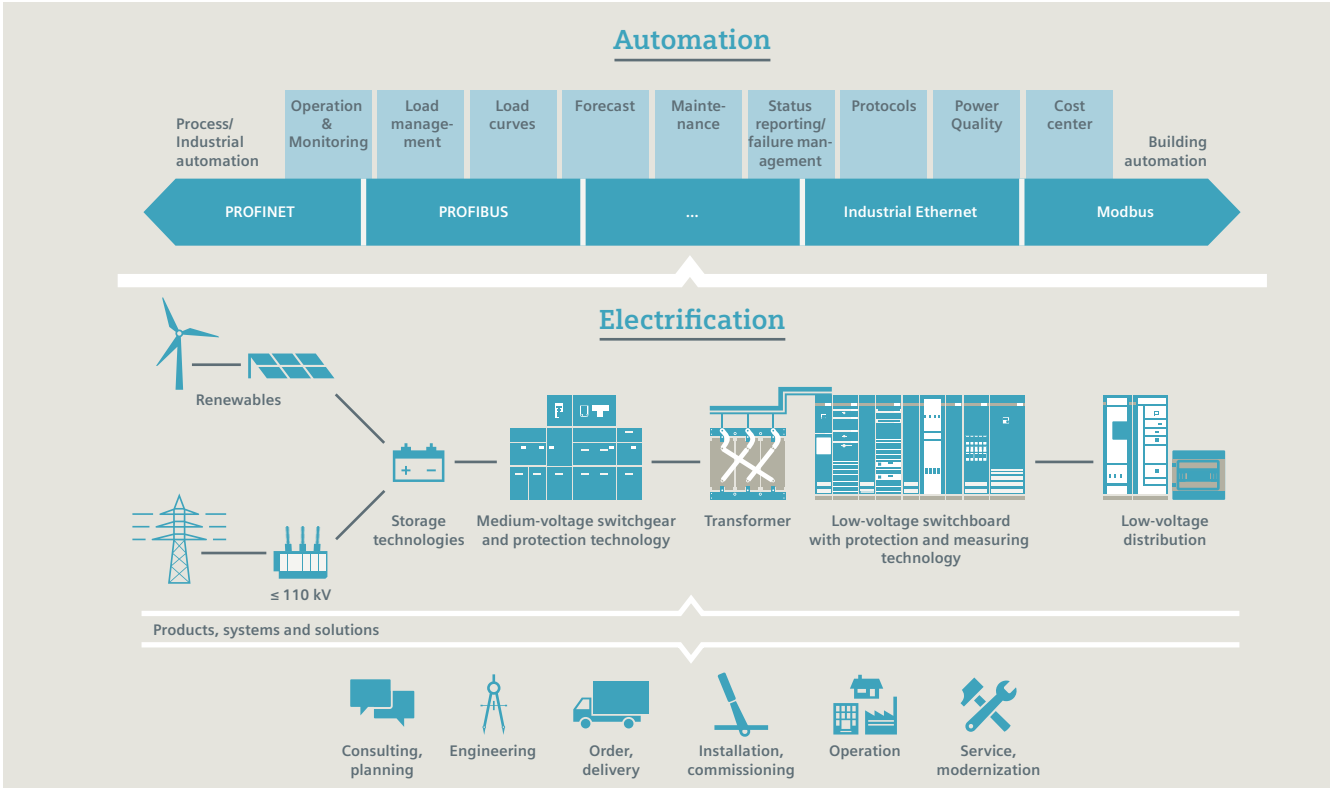

© Siemens AG 2015

Integrated Drive Systems

Faster on the market and in the black with Integrated Drive Systems

SIMOTICS is an important element of a Siemens Integrated Drive System, contributing significantly to increased efficiency, productivity, and availability in industrial production processes.

Integrated Drive Systems are Siemens' trendsetting answer to the high degree of complexity that characterizes drive and automation technology today. The world's only true one-stop solution for entire drive systems is characterized in particular by its threefold integration: Horizontal, vertical, and lifecycle integration ensure that every drive system component fits seamlessly into the whole system, into any automation environment, and even into the entire lifecycle of a plant.

The outcome is an optimal workflow – from engineering all the way to service that entails more productivity, increased efficiency, and better availability. That's how Integrated Drive Systems reduce time to market and time to profit.

Horizontal integration

Integrated drive portfolio: The core elements of a fully integrated drive portfolio are frequency converters, motors, couplings, and gear units. At Siemens, they're all available from a single source. Perfectly integrated, perfectly interacting. For all power and performance classes. As standard solutions or fully customized. No other player in the market can offer a comparable portfolio. Moreover, all Siemens drive components are perfectly matched, so they are optimally interacting.

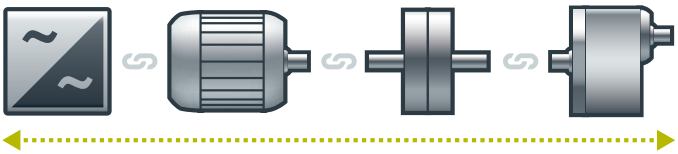

You can boost the availability of your application or plant to up to

99 %*

*e.g., conveyor application

Vertical integration

Thanks to **vertical integration**, the complete drive train is seamlessly integrated in the entire automation environment – an important prerequisite for production with maximum value added. Integrated Drive Systems are part of Totally Integrated Automation (TIA), which means that they are perfectly embedded into the system architecture of the entire industrial production process. This enables optimal processes through maximum communication and control.

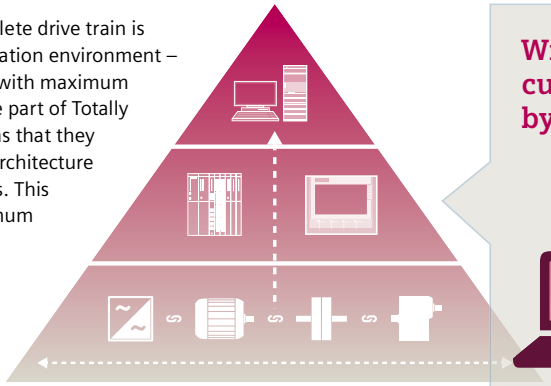

With TIA Portal you can cut your engineering time by up to

30 %

Lifecycle integration

Lifecycle integration adds the factor of time: Software and service are available for the entire lifecycle of an Integrated Drive System. That way, important optimization potential for maximum productivity, increased efficiency, and highest availability can be leveraged throughout the system's lifecycle – from planning, design, and engineering to operation, maintenance, and all the way even to modernization.

With Integrated Drive Systems, assets become important success factors. They ensure shorter time to market, maximum productivity and efficiency in operation, and shorter time to profit.

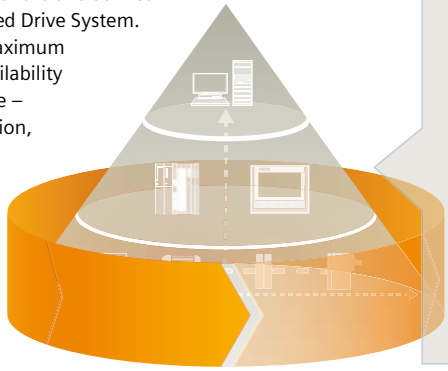

With Integrated Drive Systems you can reduce your maintenance costs by up to

15 %

www.siemens.com/ids

© Siemens AG 2015

Introduction



1/2	**General information regarding efficiency in accordance with International Efficiency**
1/2	Efficiency classes and efficiencies according to IEC 60034-30
1/4	**Guide to selecting and ordering the motors**
1/4	Catalog orientation and drive selection
1/8	Special versions
1/13	**General technical specifications**
1/13	Cut-away diagram of a low-voltage motor
1/14	Colors and paint finish
1/17	Packaging, safety notes, documentation, test certificates and extension of liability for defects
1/18	Designs in accordance with standards and specifications
1/22	Motor protection
1/25	Voltages, currents and frequencies
1/25	Outputs
1/26	Rating plate and extra rating plates
1/27	Efficiency and power factor, rated speed and direction of rotation, rated torque
1/28	Windings and insulation
1/30	Heating and ventilation
1/32	Types of construction
1/34	Flange dimensions
1/35	Motor connection and terminal box
1/44	Mechanical design and degrees of protection
1/46	Balance and vibration quantity
1/47	Shaft and rotor
1/49	Bearings and lubrication
1/72	Coolant temperature and installation altitude
1/73	Modular technology
1/73	• Separately driven fan
1/74	• Brakes
1/81	• Additional versions
1/82	• Basic versions
1/82	• 1XP8 012 rotary pulse encoder
1/83	Special technology
1/83	• LL 861 900 220 rotary pulse encoder
1/84	• HOG9 D 1024 I rotary pulse encoder
1/85	• POG9 rotary pulse encoder
1/85	• POG10 rotary pulse encoder
1/86	• HOG10 D 1024 I rotary pulse encoder
1/87	• Dimensions and weights

© Siemens AG 2015

Overview

Harmonization of the efficiency classes

Different energy efficiency standards exist worldwide for induction motors. To promote international harmonization, the international standard IEC 60034-30-1 03/2014 (Rotating electrical machines – Part 30: Efficiency classes of single-speed, three-phase, cage-induction motors (IE code)) was created. This groups low-voltage asynchronous motors into new efficiency classes (first released in October 2008).

Applicability (excerpt)

- Low-voltage motors up to 1000 V (50/60 Hz with line operation)
- Rating: 0.12 to 1000 kW; with 2, 4, 6 or 8-poles
- Operating mode: S1

The efficiencies in IEC 60034-30-1 are based on the method for determining losses according to IEC 60034-2-1:2014.

IE efficiency classes

The efficiency classes are grouped according to the following nomenclature (IE = International Efficiency):

- IE1 (Standard Efficiency)
- IE2 (High Efficiency)
- IE3 (Premium Efficiency)
- IE4 (Super Premium Efficiency)

IEC 60034-30-1	NEMA-MG1	GB 18613-2012
IE4 [1]		**Grade 1 (IE4)**
IE3	**Premium Efficient (60 Hz)**	**Grade 2 (IE3)**
IE2	**Energy Efficient (60 Hz)**	**Grade 3 (IE2)**

Comparison of IE efficiency classes

Note:
All efficiency classes are stated with reference to 50 Hz data (unless specified otherwise).

Measuring method according to IEC 60034-2-1:2014 for determining the efficiency

With this measuring method, motor losses are no longer applied as a percentage, but are determined by standard methods. The nominal efficiencies are therefore reduced from EFF1 to IE2 and from EFF2 to IE1, even though there have been no technical or physical changes to the motors.

Previously: P_{LL} = 0.5 % of P_1 added (IEC 60034-2)
Now: P_{LL} = individual measurement (IEC 60034-1)

P_{LL} = Load-dependent supplementary losses

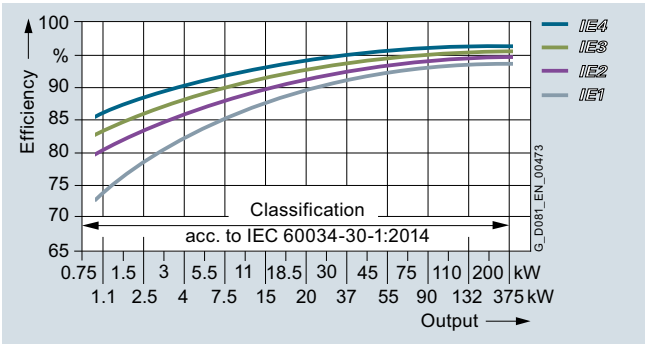

IE1-IE4 efficiencies, 4-pole, 50 Hz, according to the output

Minimum efficiencies according to IEC 60034-30-1:2014

Rated output	Efficiency η in % IEC IE class							
$P_{rated, 50\ Hz}$	**IE1** – Standard Efficiency				**IE2** – High Efficiency			
kW	2-pole	4-pole	6-pole	8-pole	2-pole	4-pole	6-pole	8-pole
0.18	52.8	57.0	45.5	38.0	60.4	64.7	56.6	45.9
0.20	54.6	58.5	47.6	39.7	61.9	65.9	58.2	47.4
0.25	58.2	61.5	52.1	43.4	64.8	68.5	61.6	50.6
0.37	63.9	66.0	59.7	49.7	69.5	72.7	67.6	56.1
0.40	64.9	66.8	61.1	50.9	70.4	73.5	68.8	57.2
0.55	69.0	70.0	65.8	56.1	74.1	77.1	73.1	61.7
0.75	72.1	72.1	70.0	61.2	77.4	79.6	75.9	66.2
1.1	75.0	75.0	72.9	66.5	79.6	81.4	78.1	70.8
1.5	77.2	77.2	75.2	70.2	81.3	82.8	79.8	74.1
2.2	79.7	79.7	77.7	74.2	83.2	84.3	81.8	77.6
3	81.5	81.5	79.7	77.0	84.6	85.5	83.3	80.0
4	83.1	83.1	81.4	79.2	85.8	86.6	84.6	81.9
5.5	84.7	84.7	83.1	81.4	87.0	87.7	86.0	83.8
7.5	86.0	86.0	84.7	83.1	88.1	88.7	87.2	85.3
11	87.6	87.6	86.4	85.0	89.4	89.8	88.7	86.9
15	88.7	88.7	87.7	86.2	90.3	90.6	89.7	88.0
18.5	89.3	89.3	88.6	86.9	90.9	91.2	90.4	88.6
22	89.9	89.9	89.2	87.4	91.3	91.6	90.9	89.1
30	90.7	90.7	90.2	88.3	92.0	92.3	91.7	89.8
37	91.2	91.2	90.8	88.8	92.5	92.7	92.2	90.3
45	91.7	91.7	91.4	89.2	92.9	93.1	92.7	90.7
55	92.1	92.1	91.9	89.7	93.2	93.5	93.1	91.0
75	92.7	92.7	92.6	90.3	93.8	94.0	93.7	91.6
90	93.0	93.0	92.9	90.7	94.1	94.2	94.0	91.9
110	93.3	93.3	93.3	91.1	94.3	94.5	94.3	92.3
132	93.5	93.5	93.5	91.5	94.6	94.7	94.6	92.6
160	93.8	93.8	93.8	91.9	94.8	94.9	94.8	93.0
200 … 375	94.0	94.0	94.0	92.5	95.0	95.1	95.0	93.5

Rated output	Efficiency η in % IEC IE class							
$P_{rated, 50\ Hz}$	**IE3** – Premium Efficiency Standard Efficiency				**IE4** – Super Premium Efficiency High Efficiency			
kW	2-pole	4-pole	6-pole	8-pole	2-pole	4-pole	6-pole	8-pole
0.18	65.9	69.9	63.9	58.7	70.8	74.7	70.1	67.2
0.20	67.2	71.1	65.4	60.6	71.9	75.8	71.4	68.4
0.25	69.7	73.5	68.6	64.1	74.3	77.9	74.1	70.8
0.37	73.8	77.3	73.5	69.3	78.1	81.1	78.0	74.3
0.40	74.6	78.0	74.4	70.1	78.9	81.7	78.7	74.9
0.55	77.8	80.8	77.2	73.0	81.5	83.9	80.9	77.0
0.75	80.7	82.5	78.9	75.0	83.5	85.7	82.7	78.4
1.1	82.7	84.1	81.0	77.7	85.2	87.2	84.5	80.8
1.5	84.2	85.3	82.5	79.7	86.5	88.2	85.9	82.6
2.2	85.9	86.7	84.3	81.9	88.0	89.5	87.4	84.5
3	87.1	87.7	85.6	83.5	89.1	90.4	88.6	85.9
4	88.1	88.6	86.8	84.8	90.0	91.1	89.5	87.1
5.5	89.2	89.6	88.0	86.2	90.9	91.9	90.5	88.3
7.5	90.1	90.4	89.1	87.3	91.7	92.6	91.3	89.3
11	91.2	91.4	90.3	88.6	92.6	93.3	92.3	90.4
15	91.9	92.1	91.2	89.6	93.3	93.9	92.9	91.2
18.5	92.4	92.6	91.7	90.1	93.7	94.2	93.4	91.7
22	92.7	93.0	92.2	90.6	94.0	94.5	93.7	92.1
30	93.3	93.6	92.9	91.3	94.5	94.9	94.2	92.7
37	93.7	93.9	93.3	91.8	94.8	95.2	94.5	93.1
45	94.0	94.2	93.7	92.2	95.0	95.4	94.8	93.4
55	94.3	94.6	94.1	92.5	95.3	95.7	95.1	93.7
75	94.7	95.0	94.6	93.1	95.6	96.0	95.4	94.2
90	95.0	95.2	94.9	93.4	95.8	96.1	95.6	94.4
110	95.2	95.4	95.1	93.7	96.0	96.3	95.8	94.7
132	95.4	95.6	95.4	94.0	96.2	96.4	96.0	94.9
160	95.6	95.8	95.6	94.3	96.3	96.6	96.2	95.1
200	95.8	96.0	95.8	94.6	96.5	96.7	96.3	95.4
250	95.8	96.0	95.8	94.6	96.5	96.7	96.5	95.4
315 … 375	95.8	96.0	95.8	94.6	96.5	96.7	96.6	95.4

[1] Defined in IEC/TS 60034-31.

© Siemens AG 2015

Overview (continued)

Background information

Comprehensive laws have been introduced in the European Union with the objective of reducing energy consumption and therefore CO_2 emissions. EU Directive 640/2009 concerns the energy consumption or efficiency of induction motors in the industrial environment. This Directive is now in force in every country of the European economic area.

For further details on internationally applicable standards and legal requirements, visit:
www.siemens.com/international-efficiency

Exceptions to the EU Directive:

- Motors that are designed to be operated totally submerged in a liquid;
- Motors fully integrated into a product (e.g. a gear unit, pump, fan or compressor) whose energy efficiency cannot be measured independently of the product;
- Motors that are specially designed for operation under the following conditions:
  - At altitudes greater than 4000 meters above sea level;
  - At ambient temperatures above 60 °C;
  - At maximum operating temperatures above 400 °C;
  - At ambient temperatures below -30 °C (any motor)
  - With cooling liquid temperatures at the product intake of below 5 °C or above 25 °C;
  - In hazardous areas in the context of Directive 94/9/EU of the European Parliament and Council;
- Brake motors

The following motors are not involved:

- 8-pole motors
- Pole-changing motors
- Synchronous motors
- Motors for intermittent duty S2 to S9
- Single-phase motors
- Motors specially developed for converter operation in accordance with IEC 60034-25

The following changes will come into effect on the dates below:

Since July 27, 2014, the following exceptions have been valid in accordance with EU Regulation 4/2014:

- At altitudes exceeding 4000 m (above sea level)
- Where ambient temperatures exceed 60 °C
- At ambient temperatures of less than -30 °C, or less than 0 °C with water cooling
- Where coolant temperatures at the inlet to a product are less than 0 °C or exceed 32 °C

Since January 1, 2015:
Compliance with the legally required minimum efficiency class IE3 for outputs from 7.5 to 375 kW or, as an alternative, IE2 motor plus frequency converter

Changes in accordance with EU Commission Regulation 640/2009
Low-voltage motors with an output rating of between 7.5 and 375 kW and efficiency IE2 must be labeled as follows with effect from January 1, 2015:



This obligation applies only within the European Economic Area. Correct application is the sole responsibility of the customer.

Other potential restrictions as described in the technical documentation may apply to converter operation and must be taken into account!

The following are generally recommended for converter operation:

- Motor temperature detection by embedded temperature sensor
- Bearing insulation with frame size 225 and larger

Motor series SIMOTICS VSD10 (1LE1092/1LE1592), VSD4000 (1FP10/1FP15) and SIMOTICS FD (1LH1) are the preferred motor types for converter operation.

January 1, 2017:
Compliance with the legally required minimum efficiency class IE3 for outputs from 0.75 to 375 kW or, as an alternative, IE2 motor plus frequency converter

Note:
Different minimum efficiency class requirements apply in China, Korea and Australia. Other countries will be available soon.

Motors for the North American market

The Energy Policy Act (EPAct) was superseded in December 2010 by the Energy Independence Security Act (EISA).

The following motors must fulfill the NEMA Premium Efficient Level:

- 1 to 200 hp
- 2, 4 and 6-pole
- 230 V, 460 V, motors with feet

In addition, the following motors, for example, must fulfill the NEMA Energy Efficient Level:

- 201 to 500 hp
- 8-pole
- All voltages < 600 V
- Flange-mounting motors without feet (footless motors) (IM B5 and other flange types)
- NEMA design C (increased starting torque)

For details, see NEMA MG1, Table 12-11 and Table 12-12.

Abbreviations

NEMA: National Electrical Manufacturers Association
IEC: International Electrotechnical Commission

© Siemens AG 2015

Overview

Steps for drive selection

Step 1	Orientation and general technical information		
Technical requirements for the motor	Rated frequency and rated voltage	3 AC 50/60 Hz, 400, 500 or 690 V	
	Operating mode	Standard duty (continuous duty S1 according to EN 60034-1)	
	Degree of protection or type of explosion protection required	IP..	
	Rated speed (No. of poles)	n = ... rpm	
	Rated output	P =..... kW	
	Rated torque	$T = P \cdot 9550/n$ = ... Nm	
	Type of construction	IM..	
Step 2	**Preselection in accordance with the application**		
Determination of the installation conditions and definition of the application, if necessary	Ambient temperature	≤ 40 °C	> 40 °C
	Installation altitude	≤ 1000 m	> 1000 m
	Factors for derating	None	Determine the factor for derating (for reduction factor, see "Coolant temperature and installation altitude" on Page 1/72)
Cross-reference to other motors	These can be Loher motors for special requirements in the area of explosion protection and applications or motors to the NEMA standard		
Step 3	**Preliminary selection of the motor**		
Determination of the range of possible motors	Select the frame size and therefore the possible motors on the basis of the following parameters: cooling method, degree of protection, rated output, rated speed and rated torque range. Note: The standard temperature range of the motors is from –20 to +40 °C.		

Layout of the selection and ordering tables and description of the columns of the table headers

Output, frame size, temperature class					Operating values at rated output																		Article No., add. data			
Table header – Meaning																										
P_{rated}, 50 Hz	Temperature class	P_{rated}, 60 Hz	P_{rated}, 60 Hz	Frame size	n_{rated}, 50 Hz	T_{rated}, 50 Hz	IE class	CC No. CC032A	η_{rated}, 50 Hz, 4/4	η_{rated}, 50 Hz, 3/4	η_{rated}, 50 Hz, 2/4	cos-φ_{rated}, 50 Hz, 4/4	I_{rated}, 50 Hz, 400 V	I_{rated}, 50 Hz, 690 V	T_{LR}/T_{rated}	I_{LR}/I_{rated}	T_B/T_{rated}	L_{pfA}, 50 Hz	L_{WA}, 50 Hz	t_E, 50 Hz, T1/T2	t_E, 50 Hz, T3	Article No.	m IM B3	J	Torque class
kW		**kW**	**hp**	FS	rpm	Nm			%	%	%		A	A				dB (A)	dB (A)	s	s		kg	kgm^2	CL

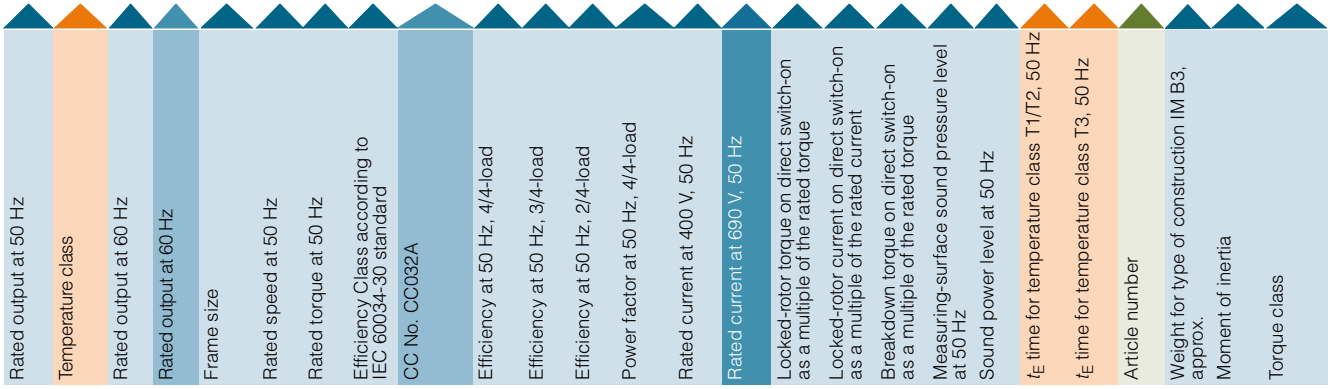

Legend:

Primary key
Standard values for all motors
Specially for NEMA Energy Efficient MG1 motors, Table 12-11 or NEMA Premium Efficient MG1 motors, Table 12-12
Specially for explosion-proof motors for Zone 1 in type of protection Ex e
Specially for versions for converter operation

Note on pole-changing motors:
The operating values are specified here for the rated output for the two different pole numbers.

Step 4	Detailed selection of the motors in the selection and ordering data tables
Determination of the basic Article No. of the motor	Determine the motor Article No. according to the following parameters: rated output, rated speed, rated torque and rated current from the "Selection and ordering data" for the motors that have already been identified as possibilities.
Step 5	**Selection of the special versions or options**
Completing the motor Article No.	Determine special versions and the associated order codes (e.g. special voltages and types of construction, motor protection and degrees of protection, windings and insulation, colors and paint finish, mountings and mounting technology, etc.).
Step 6	**Additional information for motor selection**
Checking the required measurements	The dimensions are specified in each catalog section under the heading of "Dimensions"
Selection of the frequency converter, if required	Article No. of the converter as well as its selection, see Catalogs D 11, D 11.1, D 18.1, D 21.3, D 31 and DA 51.2.

© Siemens AG 2015

Overview (continued)

Steps for drive selection in the catalog

Catalog section

Step 1 Introduction — 1

Step 2 SIMOTICS GP/SD 1LE1/1PC1 Standard Motors — 2

Orientation

Step 3
- Motors with IE2 High Efficiency
- Motors with IE3 Premium Efficiency
- Motors with IE4 Super Premium Efficiency
- Motors with IE1 Standard Efficiency
- NEMA Energy Efficient MG1 motors, Table 12-11
- NEMA Premium Efficient MG1 motors, Table 12-12
- Pole-changing motors

Step 4 Supplements to article numbers and special versions

Step 5 Dimensions

Step 2 SIMOTICS XP 1MB1 Explosion-Proof Motors — 4

Orientation

Step 3 Motors for Zone 21/22 or 2 in type of protection Ex t or Ex n
- Motors with IE1 Standard Efficiency
  - Aluminum series 1MB10
- Motors with IE2 High Efficiency
  - Aluminum series 1MB10
  - Cast-iron series 1MB15/6
- Motors with IE3 Premium Efficiency
  - Aluminum series 1MB10
  - Cast-iron series 1MB15/6

Step 4 Supplements to article numbers and special versions

Step 5 Dimensions

Step 2 SIMOTICS DP Application-Specific Motors — 5

Step 3 SIMOTICS GP/SD smoke-extraction motors

Orientation

Step 4 Motors with IE2 High Efficiency
- Aluminum series 1PC1300
- Aluminum series 1PC1303
- Cast-iron series 1PC1301
- Cast-iron series IPC1304

Step 5 Supplements to article numbers and special versions

Step 6 Dimensions

Step 3 SIMOTICS GP/SD/XP marine motors

Orientation

Step 4 Motors with IE2 High Efficiency
- Aluminum series 1LE10.1, 1MB10.1
- Cast-iron series 1LE1..1, 1MB1..1

Motors with IE3 Premium Efficiency
- Aluminum series 1LE10.3, 1MB10.3
- Cast-iron series 1LE1..3, 1MB1..3

Motors with IE4 Super Premium Efficiency
- Aluminum series 1LE10.4
- Cast-iron series 1LE1..4

Motors with IE1 Standard Efficiency
- Aluminum series 1LE10.2, 1MB10.2
- Cast-iron series 1LE1..2

Pole-changing motors
- Aluminum series 1LE1011, 1LE1012

Step 4 Supplements to article numbers and special versions

Step 6 Dimensions

Step 3 SIMOTICS DP 1PC14 steel plant motors

Orientation

Step 4 Motors with IE3 High Efficiency for line operation
- Cast-iron series 1PC1433

Motors for converter operation
- Cast-iron series 1PC1443
- Cast-iron series 1PC1446

Step 5 Supplements to article numbers and special versions

Step 6 Dimensions

© Siemens AG 2015

Overview (continued)

Aluminum series spectrum – Standard degree of protection IP55; optionally IP56 or IP65

Catalog section	Motor version	Motor type (alum.)	Motor type – Frame size – Rated output at 50 Hz (values in kW) or 60 Hz (values in hp)									
			71	80	90	100	112	132	160	180	200	225
2	**SIMOTICS GP 1LE10/1PC10 Standard Motors**											
	IE2 High Efficiency	1LE1001		1LE1001							0.37 … 45 kW	
		1PC1001 [1]				1PC1001 [1]		0.37 … 9 kW				
		1LE1041		1LE1041				0.75 … 22 kW				
	IE3 Premium Efficiency	1LE1003		1LE1003							0.37 … 45 kW	
		1LE1043		1LE1043							0.75 … 37 kW	
	IE4 Super Premium Efficiency	1LE1004				1LE1004					2.2 … 18.5 kW	
	IE1 Standard Efficiency	1LE1002				1LE1002		0.75 … 18.5 kW				
		1PC1002 [1]				1PC1002 [1]		0.3 … 7.4 kW				
	NEMA Energy Efficient	1LE1021		1LE1021 Eagle Line							0.37 … 37 kW 0.5 … 50 hp	
	NEMA Premium Efficient	1LE1023		1LE1023 Eagle Line							0.37 … 37 kW 0.5 … 50 hp	
	Pole-changing	1LE1011				1LE1011					0.55 … 28 kW	
		1LE1012				1LE1012					0.6 … 26 kW	
3	**SIMOTICS GP/SD VSD10 Line Standard Motors for Converter Operation** (available soon)											
4	**SIMOTICS XP 1MB10 Explosion-Proof Motors – Ex tb (Zone 21), Ex tc (Zone 22), Ex n (Zone 2)**											
	IE1 Standard Efficiency	1MB10.2		1MB1012/1MB1022/1MB1032				0.37 … 18.5 kW				
	IE2 High Efficiency	1MB10.1		1MB1011/1MB1021/1MB1031				0.37 … 18.5 kW				
	IE3 Premium Efficiency	1MB10.3		1MB1013/1MB1023/1MB1033				0.37 … 18.5 kW				
5	**SIMOTICS DP Application-Specific Motors**											
	SIMOTICS GP smoke-extraction motors											
	IE2 High Efficiency	1PC1300		1PC1300				0.37 … 18.5 kW				
	IE3 Premium Efficiency	1PC1303						1PC1303 0.37 … 18.5 kW				
	SIMOTICS GP/XP marine motors											
	IE2 High Efficiency	1LE1001		1LE1001							0.37 … 45 kW	
		1MB10.1		1MB10.1				0.37 … 18.5 kW				
	IE3 Premium Efficiency	1LE1003		1LE1003							0.37 … 45 kW	
		1MB10.3		1MB10.3				0.37 … 18.5 kW				
	IE4 Super Premium Efficiency	1LE1004				1LE1004		2.2 … 18.5 kW				
	IE1 Standard Efficiency	1LE1002				1LE1002		0.75 … 18.5 kW				
		1MB10.2		1MB10.2				0.37 … 18.5 kW				
	NEMA Energy Efficient	1LE1021		1LE1021							0.37 … 37 kW 0.5 … 50 hp	
	NEMA Premium Efficient	1LE1023		1LE1023							0.37 … 37 kW 0.5 … 50 hp	
	Pole-changing	1LE1011				1LE1011					0.55 … 28 kW	
		1LE1012				1LE1012					0.6 … 26 kW	

[1] Start of delivery ex stock planned for end of 2015.

© Siemens AG 2015

Overview (continued)

Cast-iron series spectrum – Standard degree of protection IP55; optionally IP56 or IP65

Catalog section	Motor version	Motor type (cast-iron)	Motor type – Frame size – Rated output at 50 Hz (values in kW) or 60 Hz (values in hp)												
			71	80	90	100	112	132	160	180	200	225	250	280	315
2	**SIMOTICS SD 1LE15/1LE16 Standard Motors**														
	IE2 High Efficiency	1LE1501	1LE1501 Basic Line												0.18 … 200 kW
		1LE1601				1LE1601 Performance Line									0.75 … 200 kW
		1LE1541								1LE1541					22 … 200 kW
	IE3 Premium Efficiency	1LE1503	1LE1503 Basic Line												0.18 … 200 kW
		1LE1603				1LE1603 Performance Line									1.5 … 200 kW
		1LE1543									1LE1543				37 … 185 kW
		1LE1643									1LE1543				37 … 185 kW
	IE4 Super Premium Efficiency	1LE1504				1LE1504									2.2 … 200 kW
		1LE1604				1LE1604									2.2 … 200 kW
	NEMA Energy Efficient	1LE1521	1LE1521 Eagle Line Basic												0.18 … 200 kW 0.25 … 250 hp
		1LE1621				1LE1621 Eagle Line Performance									0.18 … 200 kW 0.25 … 250 hp
	NEMA Premium Efficient	1LE1523	1LE1523 Eagle Line Basic												0.18 … 200 kW 0.25 … 250 hp
		1LE1623				1LE1623 Eagle Line Performance									0.18 … 200 kW 0.25 … 250 hp
3	**SIMOTICS GP/SD VSD10 Line Standard Motors for Converter Operation** (available soon)														
4	**SIMOTICS XP 1MB15/1MB16 Explosion-Proof Motors – Ex tb (Zone 21), Ex tc (Zone 22), Ex n (Zone 2)**														
	IE2 High Efficiency	1MB15.1				1MB15.1 Basic Line									0.75 … 200 kW
		1MB16.1				1MB16.1 Performance Line									0.75 … 200 kW
	IE3 Premium Efficiency	1MB15.3				1MB15.3 Basic Line									1.5 … 200 kW
		1MB16.3				1MB16.3 Performance Line									1.5 … 200 kW
5	**SIMOTICS DP Application-Specific Motors**														
	SIMOTICS SD smoke-extraction motors														
	IE2 High Efficiency	1PC1301								1PC1301					15 … 200 kW
	IE3 Premium Efficiency	1PC1304								1PC1304					18.5 … 200 kW
	SIMOTICS SD/XP marine motors														
	IE2 High Efficiency	1LE1501	1LE1501												0.18 … 200 kW
		1LE1601				1LE1601									0.75 … 200 kW
		1MB15.1				1MB15.1									0.75 … 200 kW
		1MB16.1				1MB16.1									0.75 … 200 kW
	IE3 Premium Efficiency	1LE1503	1LE1503												0.18 … 200 kW
		1LE1603				1LE1603									1.5 … 200 kW
		1MB15.3				1MB15.3									1.5 … 200 kW
		1MB16.3				1MB16.3									1.5 … 200 kW
	IE4 Super Premium Efficiency	1LE1504				1LE1504									2.2 … 200 kW
		1LE1604				1LE1604									2.2 … 200 kW
	NEMA Energy Efficient	1LE1521	1LE1521												0.18 … 200 kW 0.25 … 250 hp
		1LE1621				1LE1621									0.18 … 200 kW 0.25 … 250 hp
	NEMA Premium Efficient	1LE1523	1LE1523												0.18 … 200 kW 0.25 … 250 hp
		1LE1623				1LE1623									0.18 … 200 kW 0.25 … 250 hp
	SIMOTICS DP 1PC14 steel plant motors														
	IE3 Premium Efficiency	1PC1433					1PC1433								2.2 … 90 kW
	Converter operation	1PC1443					1PC1443								2.2 … 90 kW
		1PC1463						1PC1463							4.8 … 36 kW

© Siemens AG 2015

Overview

The following table contains a listing of all available special versions according to category and availability in the individual catalog sections. The order codes are listed here according to the function. An alphanumerical listing of all special versions can be found in the Appendix in the Index of order codes.

Note:
Options cannot always be freely combined. It is not possible to describe every single impermissible option combination in the catalog. Incompatibility between options may result in rejection of an order when multiple options are ordered.

Special versions	Additional identification code **-Z** with order code and plain text if required	For further information, see Page	Catalog section – Page						
			2 Standard motors		4 Ex motors		5 Smoke-extraction motors		Steel plant motors
			Aluminum series 1LE10	Cast-iron series 1LE15 1LE16	Aluminum series 1MB10	Cast-iron series 1MB15 1MB16	Aluminum series 1PC1300 1PC1303	Cast-iron series 1PC1301 1PC1304	Cast-iron series 1PC14
Design for Zones according to ATEX									
Design (IP55) for Zone 2 in Ex nA II C and 22 in Ex tc IIIB, for non-conductive dust	**B30**	4/6			4/31	4/34			
Design for Zone 2 in Ex nA IIB T3 Gc	**B31**	4/6			4/31	4/34			
VIK design marked with Ex nA II on rating plate	**C02**	4/7			4/31	4/34			
Motor protection (bearing protection)									
Prepared for mounting a SIPLUS CMS 1000 vibration sensor	**Q05**	1/49		2/80			5/22	5/24	5/65
Motor protection with PTC thermistor with 3 embedded temperature sensors for tripping	**Q11** *New!*			2/80					
Motor protection with PTC thermistor with 6 embedded temperature sensors for tripping and alarm	**Q12** *New!*			2/80					
Motor temperature detection with embedded temperature sensor KTY 84-130	**Q23** *New!*			2/80					
Motor temperature detection with 2x embedded KTY 84-130 temperature sensors	**Q25** *New!*			2/80					
Temperature detectors for tripping	**Q31** *New!*			2/80					
2 × 3 temperature detectors for alarm and tripping	**Q32**			2/80					
Installation of 3 Pt100 resistance thermometers in stator winding (2-wire circuit)	**Q60** *New!*			2/80					
Installation of 6 Pt100 resistance thermometers in stator winding (2-wire circuit)	**Q61** *New!*			2/80					
Installation of 1 Pt100 resistance thermometer in stator winding, 2-wire circuit	**Q62**			2/80					
Installation of 3 Pt100 resistance thermometers in stator winding, 3-wire circuit	**Q63**			2/80					
Installation of 6 Pt100 resistance thermometers in stator winding, 3-wire circuit	**Q64**			2/80					
Installation of 2 Pt100 screw-in resistance thermometers in basic circuit for monitoring bearing temperature with rolling-contact bearings	**Q72**	1/24		2/80		4/34			
Installation of 2 Pt100 screw-in resistance thermometers in 3-wire circuit for monitoring bearing temperature with rolling-contact bearings	**Q78**	1/24		2/80		4/34			
Installation of 2 Pt100 double screw-in resistance thermometers in 3-wire circuit for monitoring bearing temperature with rolling-contact bearings	**Q79**	1/24		2/80		4/34			
Motor connection and terminal box									
External grounding	**H04**	1/35	2/74	2/80			5/22		
Terminal box on NDE	**H08**	1/35	2/74	2/80			5/22	5/24	5/65
Second external grounding	**H70**	1/35		2/80					5/65
Rotation of the terminal box through 90°, entry from DE	**R10**	1/36	2/74	2/80	4/31	4/34			5/65
Rotation of the terminal box through 90°, entry from NDE	**R11**	1/36	2/74	2/80	4/31	4/34			5/65
Rotation of the terminal box through 180°	**R12**	1/36	2/74	2/81	4/31	4/34	5/22	5/24	5/65
Terminal box in position 0°; connection from right	**R13**	1/36					5/22	5/24	
One EMC cable gland	**R14**			2/81					
One metal cable gland	**R15**	1/37	2/74	2/81					5/65
EMC cable gland, maximum configuration	**R16**			2/81					5/65
Stud terminal for cable connection, accessories pack (3 items)	**R17**			2/81		4/34			
Cable gland, maximum configuration	**R18**		2/74	2/81	4/31	4/34			5/65
Saddle terminal for connection without cable lug, accessories pack	**R19**			2/81		4/34			
3 cables protruding, 0.5 m long	**R20**	1/37	2/74	2/81					
3 cables protruding, 1.5 m long	**R21**	1/37	2/74	2/81					
6 cables protruding, 0.5 m long	**R22**	1/37	2/74	2/81					
6 cables protruding, 1.5 m long	**R23**	1/37	2/74	2/81					

© Siemens AG 2015

Overview (continued)

Special versions	Additional identification code **-Z** with order code and plain text if required	For further information, see Page	Catalog section – Page						
			2 Standard motors		**4 Ex motors**		**5 Smoke-extraction motors**		**Steel plant motors**
			Aluminum series 1LE10	Cast-iron series 1LE15 1LE16	Aluminum series 1MB10	Cast-iron series 1MB15 1MB16	Aluminum series 1PC1300 1PC1303	Cast-iron series 1PC1301 1PC1304	Cast-iron series 1PC14
Motor connection and terminal box (continued)									
6 cables protruding, 3 m long	**R24**	1/37	2/74	2/81					
Reduction piece for M cable gland in accordance with British Standard, both cable entries mounted	**R30**	1/37	2/74	2/81					
Larger terminal box	**R50**	1/35	2/74	2/81	4/31	4/34			5/65
Terminal box without cable entry opening	**R51**			2/81					5/65
Drilled removable entry plate	**R52**	1/42		2/81					
Undrilled removable entry plate	**R53**	1/42		2/81					
Auxiliary terminal box, aluminum	**R60**		2/74						
Cast-iron auxiliary terminal box (small)	**R62**	1/42		2/81		4/34			
Motor connector Han-Drive 10e for 230 VΔ/400 VY	**R70**	1/37	2/74						
Motor connector EMC Han-Drive 10e for 230 VΔ/400 VY	**R71**	1/37	2/74						
Small motor connector CQ12 with EMC	**R72**	1/37	2/74						
Small motor connector CQ12 without EMC	**R73**	1/37	2/74						
Silicon-free version	**R74**			2/81					5/65
6-piece terminal board	**R76** *New!*		2/74						
Non-standard threaded through hole (NPT or G thread)	**Y61**	1/41		2/81					
Windings and insulation									
Temperature class 155 (F), utilized acc. to 155 (F), with service factor (SF)	**N01**	1/28	2/74	2/81					
Temperature class 155 (F), utilized acc. to 155 (F), with increased output	**N02**	1/28	2/74	2/81					
Temperature class 155 (F), utilized acc. to 155 (F), with increased coolant temperature	**N03**	1/28	2/74	2/81					
Temperature class 155 (F), utilized acc. to 130 (B), coolant temperature 45 °C, derating approx. 4 %	**N05**	1/28	2/74	2/81	4/31	4/34			
Temperature class 155 (F), utilized acc. to 130 (B), coolant temperature 50 °C, derating approx. 8 %	**N06**	1/28	2/74	2/81	4/31	4/34			
Temperature class 155 (F), utilized acc. to 130 (B), coolant temperature 55 °C, derating approx. 13 %	**N07**	1/28	2/74	2/81	4/31	4/34			
Temperature class 155 (F), utilized acc. to 130 (B), coolant temperature 60 °C, derating approx. 18 %	**N08**	1/28	2/75	2/82	4/31	4/34			
Temperature class H	**N10**		2/75	2/82					
Temperature class 180 (H) at rated output and max. CT 60 °C	**N11**	1/28	2/75	2/82					5/65
Increased air humidity/temperature with 30 to 60 g water per m^3 of air	**N20**	1/28	2/75	2/82	4/31	4/34	5/22	5/24	
Increased air humidity/temperature with 60 to 100 g water per m^3 of air	**N21**	1/28	2/75	2/82	4/31	4/34			
Temperature class 155 (F), utilized acc. to 130 (B), with higher coolant temperature and/or installation altitude	**Y50** • and specified output, CT .. °C or IA .... m above sea level	1/28	2/75	2/82	4/31	4/34			
Temperature class 155 (F), utilized according to 155 (F), other requirements	**Y52** • and customer specifications	1/28	2/75	2/82					
Temperature class 180 (H), utilized according to 155 (F)	**Y75** • and specified output, CT .. °C or IA .... m above sea level	1/28	2/75	2/82					
Colors and paint finish									
Unpainted (only cast-iron parts primed)	**S00**	1/14	2/75	2/82	4/31	4/35	5/22	5/24	
Unpainted, only primed	**S01**	1/14	2/75	2/82	4/31	4/35	5/22	5/24	
Special finish	**S02** *New!*	1/14	2/75	2/82		4/35		5/24	5/65
Special finish sea air resistant	**S03**	1/14	2/75	2/82	4/31	4/35	5/22	5/24	
Special paint for use offshore	**S04**	1/14		2/82		4/35			
Internal coating	**S05**	1/14		2/82				5/24	
Top coat polyurethane	**S06** *New!*	1/14	2/75	2/82	4/31	4/35	5/22	5/24	
Finish in other standard RAL colors: RAL 1002, 1013, 1015, 1019, 2003, 2004, 3000, 3007, 5007, 5009, 5010, 5012, 5015, 5017, 5018, 5019, 6011, 6019, 6021, 7000, 7001, 7004, 7011, 7016, 7022, 7031, 7032, 7033, 7035, 9001, 9002, 9005 (see Catalog Section 1 "Introduction")	**Y53** • and standard finish RAL....	1/16	2/75	2/82	4/31	4/35	5/22	5/24	5/65

© Siemens AG 2015

Overview (continued)

Special versions	Additional identification code -Z with order code and plain text if required	For further information, see Page	Catalog section – Page						
			2 Standard motors		4 Ex motors		5 Smoke-extraction motors		Steel plant motors
			Aluminum series 1LE10	Cast-iron series 1LE15 1LE16	Aluminum series 1MB10	Cast-iron series 1MB15 1MB16	Aluminum series 1PC1300 1PC1303	Cast-iron series 1PC1301 1PC1304	Cast-iron series 1PC14
Colors and paint finish (continued)									
Finish in special RAL colors: For RAL colors, see "Special finish in special RAL colors" (see Catalog Section 1 "Introduction")	**Y56** • *New!* and special finish RAL	1/16	2/75	2/82	4/31	4/35	5/22	5/24	5/65
Modular technology - Basic versions									
Mounting of holding brake (standard assignment)	**F01**	1/44	2/76	2/83					
Mounting of brake for higher switching frequency (operating brake)	**F02**		2/76						
Mounting of separately driven fan	**F70**	1/73	2/76	2/83					5/65
Mounting of 1XP8012-10 (HTL) rotary pulse encoder	**G01**	1/44	2/76	2/83					
Mounting of 1XP8012-20 (TTL) rotary pulse encoder	**G02**	1/44	2/76	2/83					
Modular technology – Additional versions									
Brake supply voltage 24 V DC	**F10**	1/81	2/76	2/83					
Brake supply voltage 230 V AC, 50/60 Hz	**F11**	1/81	2/76	2/83					
Brake supply voltage 400 V AC, 50/60 Hz	**F12**	1/81	2/76	2/83					
Mechanical manual brake release with lever (no locking)	**F50**	1/81	2/76	2/83					
Special technology									
Mounting of LL 861 900 220 rotary pulse encoder	**G04**	1/44	2/76	2/83					5/65
Mounting of HOG 9 D 1024 I rotary pulse encoder	**G05**	1/44	2/76	2/83					5/65
Mounting of HOG 10 D 1024 I rotary pulse encoder	**G06**	1/44	2/76	2/83					5/65
Mounting of POG10D rotary pulse encoder (only in combination with separately driven fan or brake)	**G07**	1/85		2/83					
Mounting of POG9 rotary pulse encoder (only in combination with separately driven fan or brake)	**G08**	1/85		2/83					
Mounting of rotary pulse encoder HOG 10 DN 1024 I, terminal box moisture protection	**G15**			2/83					
Mounting of rotary pulse encoder HOG 10 DN 1024 I, terminal box dust protection	**G16**			2/83					
Mounting of rotary pulse encoder HOG 10 DN 1024 I + FSL (integrated centrifugal switch, speed ... rpm), terminal box moisture protection	**Y74** • and required speed .... rpm			2/83					
Mounting of rotary pulse encoder HOG 10 DN 1024 I + FSL (integrated centrifugal switch, speed ... rpm), terminal box dust protection	**Y76** • and required speed .... rpm			2/83					
Mounting of rotary pulse encoder HOG 10 DN 1024 I + ESL 93 (integrated electronic speed switch, speed ... rpm), terminal box dust protection	**Y79** • and required speed (max 3) .... rpm			2/83					
Mechanical design and degrees of protection									
Low-noise version for 2-pole motors with clockwise direction of rotation	**F77**	1/45	2/76	2/84	4/32	4/35			
Low-noise version for 2-pole motors with counter-clockwise direction of rotation	**F78**	1/45	2/76	2/84	4/32	4/35			
Prepared for mountings, center hole only	**G40**	1/44	2/76	2/84					
Prepared for mountings with D12 shaft	**G41**	1/44	2/76	2/84					
Prepared for mountings with D16 shaft	**G42**	1/44	2/76	2/84					5/65
Protective cover for encoder (pre-assembled or supplied loose depending on frame size)	**G43**	1/44	2/76	2/84					
Protective cover	**H00**	1/32	2/76	2/84	4/32	4/35	5/22		5/65
Screwed-on (instead of cast) feet	**H01**	1/35	2/76	2/84			5/22	5/24	
Vibration-proof version; vibration resistance to Class 3M4 according to IEC 60721-3-3	**H02**	1/45	2/76	2/84	4/32	4/35			
Condensation drainage holes	**H03**	1/45	2/76	2/84	4/32				5/65
Rust-resistant screws (externally)	**H07**	1/45	2/76	2/84	4/32	4/35	5/22	5/24	5/65
Housing with screw mounting	**H10**	1/35	2/76						
IP65 degree of protection	**H20**	1/45	2/76	2/84	4/32	4/35	5/22	5/24	5/65
IP54 degree of protection	**H21**			2/84					
IP56 degree of protection	**H22**	1/45	2/76	2/84	4/32	4/35	5/22	5/24	
Drive-end seal for flange-mounting motors, oil-tight to 0.1 bar	**H23**	1/44	2/76	2/84	4/32	4/35			

© Siemens AG 2015

Overview (continued)

Special versions	Additional identification code **-Z** with order code and plain text if required	For further information, see Page	Catalog section – Page						
			2 Standard motors		4 Ex motors		5 Smoke-extraction motors		Steel plant motors
			Aluminum series 1LE10	Cast-iron series 1LE15 1LE16	Aluminum series 1MB10	Cast-iron series 1MB15 1MB16	Aluminum series 1PC1300 1PC1303	Cast-iron series 1PC1301 1PC1304	Cast-iron series 1PC14
Mechanical design and degrees of protection (continued)									
Grounding brush for converter operation	**L52**	1/44		2/84					
Next larger standard flange	**P01**	1/33					5/22		
Coolant temperature and installation altitude									
Coolant temperature –50 to +40 °C	**D02**			2/84					
Coolant temperature –40 to +40 °C	**D03**	1/72	2/77	2/84	4/32	4/35			
Coolant temperature –30 to +40 °C	**D04**	1/72	2/77	2/84			5/22	5/24	
Designs in accordance with standards and specifications									
VIK version	**C02**	1/21	2/77	2/84					
Motor without CE marking for export outside EEA (see EU Directive 640/2009)	**D22**		2/77	2/84					
Electrical according to NEMA MG1-12	**D30**	1/19	2/77	2/84					
Design according to UL with "Recognition Mark"	**D31**	1/28	2/77	2/84					
KEMCO Korea Energy Efficiency Label	**D33**	1/19	2/77	2/84					
China Energy Efficiency Label	**D34**	1/20	2/77	2/84					
Ex certificate EAC for the Eurasian customs union	**D35** *New!*	4/7			4/32	4/35			
IECEx certification	**D37**				4/32	4/35			
Canadian regulations (CSA)	**D40**	1/28	2/77	2/84					
TR CU product safety certificate EAC for Eurasian customs union	**D47** *New!*	1/21	2/77	2/84					
Train-compatible version	**L82**	1/21	2/77						
Bearings and lubrication									
Regreasing device with M10 × 1 grease nipple according to DIN 71412-A	**L19**	1/49	2/77	2/85		4/35		5/24	
Located bearing DE	**L20**	1/49	2/77	2/85	4/32	4/35			
Located bearing NDE	**L21**	1/49	2/77	2/85	4/32	4/35			
Bearing design for increased cantilever forces	**L22**	1/49	2/77	2/85	4/32	4/35	5/22	5/24	
Regreasing device for sizes 100 to 160 according to DIN 3404-A	**L23**	1/49	2/77	2/85	4/32	4/35	5/22	5/24	5/65
Deep-groove bearings reinforced at both ends for DE and NDE, bearing size 63	**L25**	1/49	2/77	2/85	4/32	4/35			
Reinforced bearings at both DE and NDE, DE bearing for increased cantilever forces	**L28**	1/50		2/85					
Bearing insulation DE	**L50**	1/49		2/85					
Bearing insulation NDE	**L51**	1/49		2/85					5/65
Measuring nipple for SPM shock pulse measurement for bearing inspection	**Q01**	1/49	2/77	2/85	4/32	4/35	5/22	5/24	
Balance and vibration quantity									
Vibration quantity level B	**L00**	1/46	2/77	2/85	4/32	4/36	5/22	5/24	5/66
Balancing without feather key, feather key is supplied	**L01**	1/46	2/77	2/85	4/32	4/36	5/22	5/24	5/66
Full-key balancing	**L02**	1/46	2/77	2/85	4/32	4/36	5/22	5/24	5/66
Shaft and rotor									
Shaft extension with standard dimensions, without feather keyway	**L04**	1/47	2/77	2/85	4/32	4/36	5/23	5/25	5/66
Standard cylindrical shaft extension	**L05**	1/47	2/77	2/85	4/32	4/36	5/23	5/25	
Standard shaft made of stainless steel (e.g. 1.4021)	**L06**	1/47	2/77	2/85	4/32	4/36			5/66
Concentricity of shaft extension in accordance with DIN 42955 Tolerance R	**L07**	1/48	2/77	2/85	4/32	4/36	5/23	5/25	5/66
Concentricity of shaft extension, coaxiality and linear movement in accordance with DIN 42955 Tolerance R for flange-mounting motors	**L08**	1/48	2/77	2/85	4/32	4/36	5/23	5/25	5/66
Non-standard shaft extension, DE	**Y58** • and customer specifications	1/47	2/77	2/85	4/32	4/36	5/23	5/25	5/66
Non-standard shaft extension, NDE	**Y59** • and customer specifications	1/47	2/77	2/85	4/32	4/36	5/23	5/25	
Special shaft steel as requested by customer	**Y60** • and customer specifications			2/85					5/66
Heating and ventilation									
Sheet metal fan cover	**F74**	1/30	2/78	2/86	4/32	4/36			
Fan cover for textile industry	**F75**	1/30	2/78						
Metal external fan	**F76**	1/30	2/78	2/86	4/32	4/36			5/66
Without external fan and without fan cover	**F90**	1/30	2/78	2/86			5/23	5/25	
Anti-condensation heating for 230 V	**Q02**	1/30	2/78	2/86	4/32	4/36			5/66

© Siemens AG 2015

Overview (continued)

Special versions	Additional identification code **-Z** with order code and plain text if required	For further information, see Page	Catalog section – Page						
			2 Standard motors		4 Ex motors		5 Smoke-extraction motors		Steel plant motors
			Aluminum series 1LE10	Cast-iron series 1LE15 1LE16	Aluminum series 1MB10	Cast-iron series 1MB15 1MB16	Aluminum series 1PC1300 1PC1303	Cast-iron series 1PC1301 1PC1304	Cast-iron series 1PC14
Heating and ventilation (continued)									
Anti-condensation heating for 115 V	**Q03**	1/30	2/78	2/86	4/32	4/36			5/66
Separately driven fan with non-standard voltage and/or frequency	**Y81** • and customer specifications			2/86					
Rating plate and extra rating plates									
Extra rating plate for voltage tolerance	**B07**	1/26	2/78	2/86			5/23	5/25	
Second rating plate, loose	**M10**	1/26	2/78	2/86	4/33	4/36	5/23	5/25	5/66
Rating plate, stainless steel	**M11**	1/26	2/78	2/86	4/33	4/36			
Extra rating plate or rating plate with deviating rating plate data	**Y80** • and customer specifications	1/26	2/78	2/86	4/33	4/36	5/23	5/25	5/66
Extra rating plate with customer specifications	**Y82** • and customer specifications	1/26	2/78	2/86	4/33	4/36	5/23	5/25	5/66
Additional information on rating plate and on package label (max. 20 characters)	**Y84** • and customer specifications	1/26	2/78	2/86	4/33	4/36	5/23	5/25	
Adhesive label, supplied loose	**Y85** • and customer specifications	1/25	2/78	2/86					
Extension of the liability for defects									
Extension of the liability for defects period by 12 months to a total of 24 months (2 years) from delivery	**Q80**	1/17		2/86					
Extension of the liability for defects period by 24 months to a total of 36 months (3 years) from delivery	**Q82**	1/17		2/86					
Packaging, safety notes, documentation and test certificates									
Printed German/English Operating Instructions (compact) enclosed in each wire-lattice pallet	**B01**		2/78						
Acceptance test certificate 3.1 in accordance with EN 10204	**B02**	1/17	2/78	2/86	4/33	4/36	5/23	5/25	5/66
Printed German/English operating instructions enclosed	**B04**	1/17	2/78	2/86	4/33	4/36	5/23	5/25	5/66
Document - Electrical data sheet	**B60**		2/78	2/86					
Document - Order dimensional drawing	**B61**		2/78	2/86					
Standard test (routine test) with acceptance	**B65**			2/86			5/23	5/25	
Type test with heat run for horizontal motors, without acceptance	**B82**	1/17		2/86					
Type test with heat run for horizontal motors, with acceptance	**B83**	1/17	2/78	2/86	4/33	4/36	5/23	5/25	
Wire-lattice pallet packaging	**B99**	1/17	2/78		4/33	4/36			
Connected in star for dispatch	**M01**	1/17	2/78	2/86	4/33	4/36			
Connected in delta for dispatch	**M02**	1/17	2/78	2/86	4/33	4/36			
Printed Operating Instructions (Compact) for explosion-proof motors enclosed in other official EU languages	**Y98** • and customer specifications				4/33	4/36			
Marine version – Basic version									
With type test certificate according to Germanischer Lloyd (GL), CT45°C, temperature class 155 (F) utilized according to 155 (F)	**E11** *New!*	5/45							
With type test certificate according to Lloyds Register (LR) CT45°C, temperature class 155 (F) utilized according to 155 (F)	**E21** *New!*	5/45							
With type test certificate according to Bureau Veritas (BV), CT45°C, temperature class 155 (F) utilized according to 155 (F)	**E31** *New!*	5/45							
With type test certificate according to Registro Italiano Navale (RINA), CT45°C, temperature class 155 (F) utilized according to 155 (F)	**E41** *New!*	5/45							
With type test certificate according to Russian Maritime Register (RS), CT45°C, temperature class 155 (F) utilized according to 155 (F)	**E46** *New!*	5/45							
With type test certificate according to Det Norske Veritas (DNV), CT45°C, temperature class 155 (F) utilized according to 155 (F)	**D51** *New!*	5/45							
With type test certificate according to American Bureau of Shipping (ABS), CT50°C, temperature class 155 (F) utilized according to 155 (F)	**D52** *New!*	5/45							
With type test certificate according to Korean Register of Shipping (KR), CT45°C, temperature class 155 (F) utilized according to 155 (F)	**D54** *New!*	5/45							
Marine version – Acceptance/certification									
Individual acceptance by marine classification society	**B10** *New!*	5/47							
Type test with warm run for horizontal motors, with acceptance	**B83** *New!*	1/17							

© Siemens AG 2015

Overview

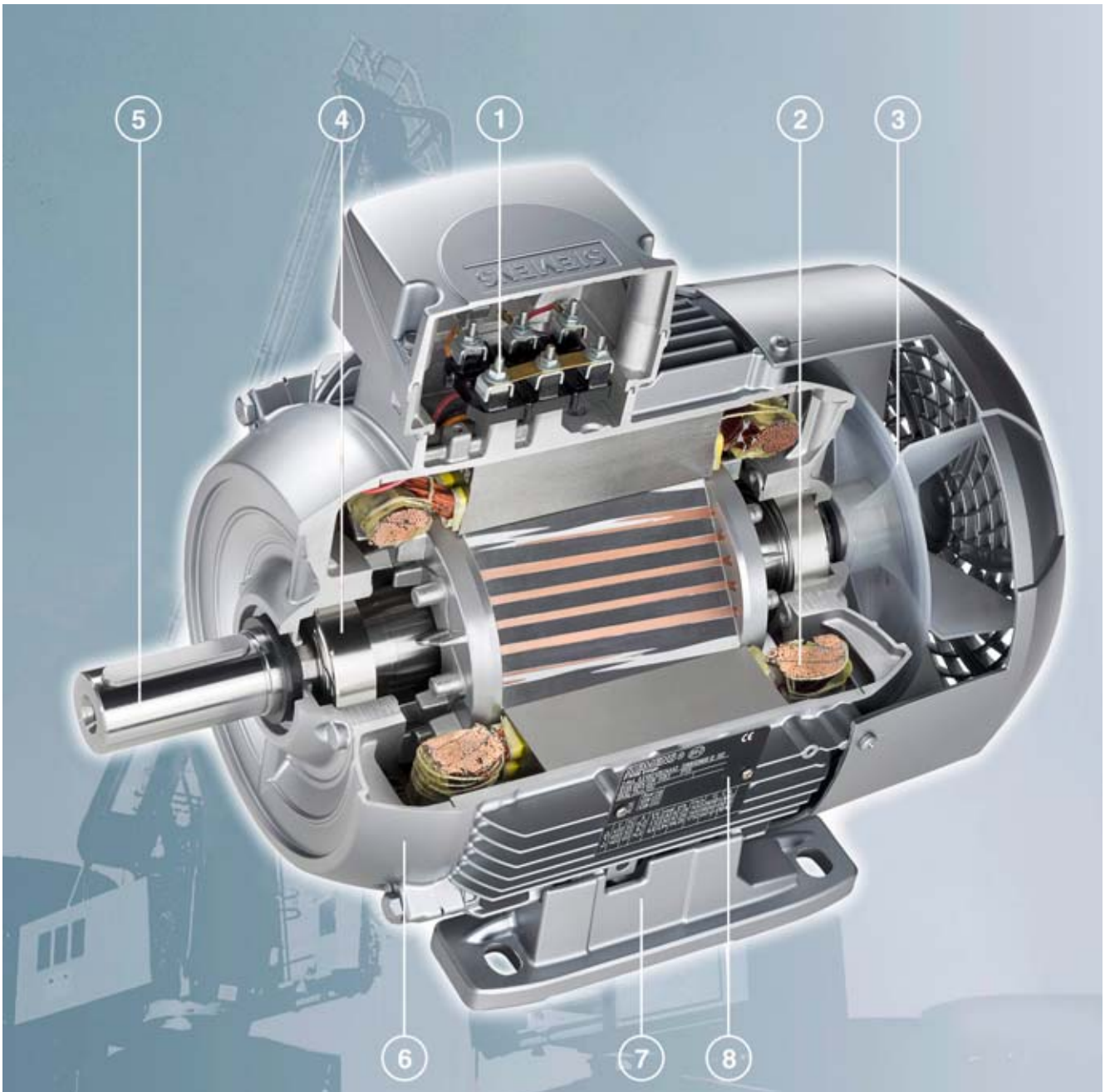

① Motor protection Page 1/22
Motor connection and terminal box Page 1/35
Voltages, currents and frequencies Page 1/25

② Windings and insulation Page 1/28
Coolant temperature and installation altitude Page 1/72

③ Heating and ventilation Page 1/30
Mechanical design and degrees of protection Page 1/44
Modular technology Page 1/73
Special technology Page 1/83

④ Bearings and lubrication Page 1/49

⑤ Shaft and rotor Page 1/47
Balance and vibration quantity Page 1/46

⑥ Colors and paint finish Page 1/14

⑦ Types of construction Page 1/32

⑧ Rating plate and extra rating plates Page 1/26

© Siemens AG 2015

Colors and paint finish

Overview

To protect the drives against corrosion and external influences, high-quality paint systems are available in various colors.

	Add. identification code **–Z** with order code						
Standard version	**S00**	**S01**	**S02**	**S03**	**S04**	**S05**	**S06**
Paint finish, suitability of paint finish for climate group in accordance with IEC 60721, Part 2-1							
Standard finish C2	Unpainted, but unfinished cast-iron surfaces are primed	Unpainted, motor primed	Special finish C3	Special finish system "sea air resistant" C4	Special finish system "offshore" C5	Internal finish, all bare internal components primed with rust inhibitor [1]	Polyurethane-based top coat, can only be ordered with **S03** or **S04**
Application							
Moderate (extended) for indoor and outdoor installation under a roof not directly exposed to weather conditions	The motors can be supplied unpainted on request	The motors can be supplied with just a primer coat on request	Worldwide (global) for outdoor installation in direct sunlight and/or exposed to weather conditions	Recommended for indoor or outdoor installation directly exposed to weather conditions, industrial climate with moderate SO_2 exposure, VIK requirements, coastal ocean climate, but not offshore ocean climate, e.g. for crane drives and for the paper industry	Recommended for outdoor installation directly exposed to weather conditions, industrial climate with moderate SO_2 exposure and offshore ocean climate, e.g. for crane drives	The motors can be supplied with internal finish on request. Recommended when there is a risk of heavy condensate formation	Exposure to direct sunlight (UV light) may cause a change in color. When color stability is a requirement, a polyurethane-based paint system is recommended for the top coat (RAL 7030). Colors other than RAL 7030 are available on request
Test requirements according to EN ISO 12944-2 Corrosion Category							
C2	–	–	C3	C4	C5	–	–
Total film thickness – nominal film thickness in µm [2] + [3]							
Motors in aluminum version							
2-K epoxy resin							
30 [4] [5]	–	30	60	120	–	–	–
Polyurethane/**S06**							
–	–	–	–	120	–	–	Film thickness similar to S03/S04
Motors in cast-iron version							
2-K epoxy resin							
60	30	60	90	150	170 [6]	–	–
Polyurethane/**S06**							
–	–	–	–	150	170 [6]	–	Film thickness similar to S03/S04
Resistance							
			For aggressive atmospheres up to 1 % acid and alkali concentration or permanent dampness in sheltered rooms	Chemical exposure up to 5 % acid and caustic solution concentration	Chemical exposure up to 5 % acid and caustic solution concentration		Sunlight
Temperature range							
Up to 120 °C for brief periods Up to 100 °C continuously	–	–	Up to 140 °C for brief periods Up to 120 °C continuously	–40 … 140 °C	–40 … 140 °C		
Rel. air humidity at (temperature)							
60 % (40 °C)	–	–	100 % (40 °C)	75 % (50 °C)	75 % (60 °C)		

Table continues on the next page.

For footnotes, see next page.

© Siemens AG 2015

Overview (continued)

	Add. identification code **–Z** with order code						
Standard version	**S00**	**S01**	**S02**	**S03**	**S04**	**S05**	**S06**
Suitability for recoating [7]							
	Can be recoated within 1 week						
Pre-treatment of parts							
	All parts cleaned and degreased, steel and cast-iron parts sandblasted						
Drying							
	All layers oven-dried						
Top coat colors							
Standard version	RAL 7030 (stone gray)						
Available colors	Alternative standard and special RAL colors must be ordered with order code **Y53** or **Y56** and specification in plain text of the required RAL number (see tables for order codes **Y53** and **Y56** on the following page for selection of available RAL numbers/RAL colors). **S06** is available only in standard RAL 7030						
Treatment of bare metal areas of shaft extensions and flanges							
	Coated with anti-corrosion agent that repels water and palm sweat						
Miscellaneous							
	Abrasion-resistant, elastic, scratch-resistant, shock-proof, totally light resistant (but not permanently UV resistant), physiologically harmless						

Note:
For transport, the bare parts are coated with anti-corrosion paint which will last for a limited amount of time.

1) Machined laminated rotor core, shaft, inner diameter of cast-iron housing

2) Total film thickness:
- The specified film thickness represents average values for the external motor surfaces
- Unpainted or one layer of paint (30 µm) less beneath the fan cover
- The film thickness may differ at inaccessible locations (pockets/ recesses or bases of ribs)

The film thickness specified for aluminum/cast-iron versions refer not only to motors, but also to components such as the bearing plate and housing. Motors are also available in an aluminum/cast-iron composite design.

3) The paint coat can become electrostatically charged where there is a thick film. Electrostatic discharges can occur. There is a risk of explosion if potentially explosive mixtures are also present at this moment. This can result in death, serious injury or material damage. When painted surfaces are recoated, one of the following conditions must be fulfilled:
- Limit the total paint film thickness according to the explosion protection group:
  - IIA, IIB: Total paint film thickness ≤ 2 mm
  - IIC: Total paint film thickness ≤ 0.2 mm for motors of group II (gas)
- Limit the surface resistance of the paint used:
  - Surface resistance ≤ 1 GΩ for motors of groups II and III (gas and dust)
- Charge transfer limit:
  - 60 nC for Group I or Group IIA devices
  - 25 nC for Group IIB devices
  - 10 nC for Group IIC devices
  - 200 nC for Group III devices
- Breakdown voltage ≤ 4 kV for explosion group III (dust only)
  Note:
  Paints for IIC with film thickness in excess of 200 µm are optionally available. Paints with film thickness in excess of 200 µm have been tested for electrostatic charging. Motors with a coating thickness exceeding 200 µm may only be painted over if the conditions mentioned above are complied with.
- Order code **S06** (polyurethane-based top coat) is not permissible for motors with type of protection Ex tb and Ex tc. Product has not yet been tested for electrostatic discharge in environments laden with explosive dust.

4) Aluminum motors/components without a paint finish already meet the requirements for corrosivity class C2. It is not therefore necessary to apply paint to components that are not visible. Paint is therefore applied only for the purpose of coloring.

5) Aluminum motors with cast-iron components (e.g. DE bearing plate) have a film thickness of > 30 µm on cast-iron components.

6) 50 µm zinc galvanized layer + 120 µm paint film thickness.

7) Primers, water-based 2-Kepoxy resin paints and polyurethane-based paints can be overpainted with paints of the same kind if the motors are in the original packaging and are still covered by the warranty. A suitability test should be conducted before any recoating work is undertaken if the client intends to use a coating of a different kind to overpaint the motor. Alternatively, a test in accordance with EN ISO 16927 "Determination of the overcoatability and recoatability of a coating" can be requested and ordered.

© Siemens AG 2015

Overview (continued)

Finish in other standard RAL colors – Order code Y53 (RAL number is required in plain text)

RAL No.	Color name	RAL No.	Color name
3007	Black red	7001	Silver gray
5007	Brilliant blue	7004	Signal gray
5009	Azure blue	7011	Iron gray
5010	Gentian blue	7016	Anthracite gray
5015	Sky blue	7022	Umbra gray
5017	Traffic blue	7031	Blue gray
5018	Turquoise blue	7032	Pebble gray
5019	Capri blue	7033	Cement gray
6011	Reseda green	7035	Light gray
6021	Pale green	9005	Jet black
7000	Squirrel gray		

The following paints must be applied twice owing to their poor opacity. The standard finish for these colors is not possible and must be ordered with **S02**, **S03** or **S04**.

RAL No.	Color name
1002	Sand yellow
1013	Oyster white
1015	Light ivory
1019	Gray beige
2003	Pastel orange
2004	Pure orange
3000	Flame red
5012	Light blue
6019	Pastel green
9001	Cream
9002	Gray white

Finish in special RAL colors – Order code Y56 (RAL number is required in plain text)

RAL No.	Color name	RAL No.	Color name
3004	Purple red	6032	Signal green
3011	Brown red	6034	Pastel turquoise
3015	Light pink	7005	Mouse gray
3020	Traffic red	7009	Green gray
4005	Blue lilac	7012	Basalt gray
5000	Violet blue	7015	Slate gray
5001	Green blue	7023	Concrete gray
5002	Ultramarine blue	7036	Platinum gray
5003	Sapphire blue	7037	Dusty gray
5005	Signal blue	7038	Agate gray
5011	Steel blue	7039	Quartz gray
5013	Cobalt blue	7040	Window gray
5014	Pigeon blue	7042	Traffic gray A
5020	Ocean blue	7044	Silk gray
5021	Water blue	7045	Telegray 1
5022	Night blue	7046	Telegray 2
5023	Distant blue	7047	Telegray 4
6000	Patina green	8012	Red brown
6001	Emerald green	8025	Pale brown
6002	Leaf green	8028	Terra brown
6005	Moss green	9003	Signal white
6009	Fir green	9004	Signal black
6010	Grass green	9006	White aluminum
6016	Turquoise green	9007	Gray aluminium
6017	May green	9010	Pure white
6018	Yellow green	9011	Graphite black
6024	Traffic green	9016	Traffic white
6026	Opal green	9017	Traffic black
6029	Mint green	9018	Papyrus white

The following paints must be applied twice owing to their poor opacity. The standard finish for these colors is not possible and must be ordered with **S02**, **S03** or **S04**.

RAL No.	Color name
1003	Signal yellow
1004	Golden yellow
1006	Maize yellow
1007	Daffodil yellow
1012	Lemon yellow
1014	Ivory
1018	Zinc yellow
1021	Rape yellow
1023	Traffic yellow
1028	Melon yellow
1032	Broom yellow
1033	Dahlia yellow
2008	Bright red orange
2009	Traffic orange
2010	Signal orange
3002	Carmine red
5024	Pastel blue
6027	Light green

Coating structure and colors not specified in the catalog are available on request.

© Siemens AG 2015

Overview

Connected in star for dispatch – Order code **M01**
The terminal board of the motor is connected in star for dispatch.

Connected in delta for dispatch– Order code **M02**
The terminal board of the motor is connected in delta for dispatch.

Packing weights

For motors		For land transport							
Frame size	Type	Type of construction IM B3				Types of construction IM B5, IM V1			
	1LE1 ... - **1PC1 ... -** **1MB1 ... -**	in box Tare	on wooden base board ISPM with hooded box Tare	on pallet Tare	in crate Tare	in box Tare	on wooden base board ISPM with hooded box Tare	on pallet Tare	in crate Tare
		kg	kg	kg	kg	kg	kg	kg	kg
71 M	**0C.2**	0.65	–	–	–	0.65	–	–	–
80 M	**0D.2**	0.65	–	–	–	0.65	–	–	–
90 S	**0E.0**	0.65	–	–	–	0.65	–	–	–
100 L	**1A.4**	–	5.0	–	–	–	5.0	–	–
	1A.5	–	5.0	–	–	–	5.0	–	–
	1A.6	–	5.0	–	–	–	5.0	–	–
112 M	**1B.2**	–	5.0	–	–	–	5.0	–	–
	1B.6	–	5.0	–	–	–	5.0	–	–
132 S	**1C.0**	4.7	–	–	–	5.2	–	–	–
	1C.1	4.7	–	–	–	5.2	–	–	–
132 M	**1C.2**	4.7	–	–	–	5.2	–	–	–
	1C.3	4.7	–	–	–	5.2	–	–	–
	1C.6	8.7	–	–	–	9.2	–	–	–
160 M	**1D.2**	4.8	–	–	–	5.7	–	–	–
	1D.3	4.8	–	–	–	5.7	–	–	–
160 L	**1D.4**	4.8	–	–	–	5.7	–	–	–
	1D.6	8.8	–	–	–	9.7	–	–	–
180		–	–	8.0	–	–	–	10.0	–
200		–	–	11.0	–	–	–	13.0	–
225		–	–	14.0	–	–	–	17.0	–
250		–	–	22.0	–	–	–	25.0	–
280		–	–	24.0	–	–	–	27.0	–
315		–	–	28.0	–	–	–	32.0	–

Data apply for individual packaging. Wire-lattice pallets can be used, order code **B99**.

Safety notes

Printed German and English Operating Instructions (Compact) enclosed in each wire-lattice pallet – Order code **B04**

Documentation

Printed German and English Operating Instructions enclosed with the motor are available as an option (standard documentation in PDF format can be obtained using the Drive Technology Configurator) – Order code **B04**

Test certificates

Acceptance test certificate 3.1 according to **EN 10204** – Order code **B02**

An acceptance test certificate 3.1 in accordance with EN 10204 can be supplied for most motors.

Type test with warm run for horizontal motors
- **with acceptance** – Order code **B83**
- **without acceptance** – Order code **B82**

During the type test, a temperature-rise test is performed; no-load, short-circuit and load characteristics are recorded; the iron losses and friction losses are determined and the efficiency is calculated from the summed losses. This option is only applicable to motors with a horizontal type of construction. Acceptance testing is performed by an external representative (e.g. customer, classification society). No acceptance test is performed when order code **B82** is stated.

Extension of the liability for defects for SIMOTICS 1LE15 and 1MB15 low-voltage motors

For SIMOTICS 1LE15 and 1MB15 low-voltage motors, it is possible to obtain an extension of the liability for defects beyond the standard liability period.

The standard warranty period is quoted in the standard conditions of supply and delivery and is 12 months. The standard warranty period for SIMOTICS 1LE16 and 1MB16 low-voltage motors is 36 months.

For the case of a new product order

With the following optional order suffixes listed in the table, extension of the liability for defects beyond the standard liability period is possible in conjunction with a new order for a product.

The markup on the product price is graded according to the duration of the extension.

Extension of the liability for defects for 1LE15 and 1MB15 motors	
Add. identification code **–Z** with order code	Description
Q80	Extension of liability for defects, by 12 months to a total of 24 months (2 years) from delivery
Q82	Extension of liability for defects, by 24 months to a total of 36 months (3 years) from delivery

© Siemens AG 2015

Designs in accordance with standards and specifications

Overview

Applicable standards and specifications

The 1LE1 motors comply with the IEC60034 series of international product standards for rotating electrical machines and, in particular, those parts that are listed in the table below.

Title	IEC/EN	EN
General specifications for rotating electrical machines	IEC 60034-1, IEC 60085	EN 60034-1
Specification of the losses and efficiency of rotating electrical machines	IEC 60034-2-1	EN 60034-2-1
General-purpose three-phase induction motors having standard dimensions and outputs	IEC 60072 Mounting dimensions and output series only (no assignment of frame size to output)	EN 50347 Mounting dimensions acc. to IEC60072 and output assignment for Europe
Starting performance of rotating electrical machines	IEC 60034-12	EN 60034-12
Terminal designations and direction of rotation for electrical machines	IEC 60034-8	EN 60034-8
Designation for types of construction, mounting and terminal box position (IM code)	IEC 60034-7	EN 60034-7
Terminal box cable entries	–	DIN 42925
Built-in thermal protection	IEC 60034-11	EN 60034-11
Noise limits of rotating electrical machines	IEC 60034-9	EN 60034-9
IEC standard voltages	IEC 60038	IEC 60038
Methods of cooling of rotating electrical machines (IC code)	IEC 60034-6	EN 60034-6
Vibration severity of rotating electrical machines	IEC 60034-14	EN 60034-14
Vibration limits	–	ISO 10816
Degrees of protection for rotating electrical machines (IP code)	IEC 60034-5	EN 60034-5
International efficiency classes for rotating electrical machines (IE code)	IEC 60034-30	EN 60034-30
In addition, the following applies to Ex motors:		
General provisions	IEC/EN 60079-0	EN 60079-0
Type of protection "n" (non-sparking)	IEC/EN 60079-15	EN 60079-15
Areas containing flammable dust	IEC/EN 60079-31	EN 60079-31

The following applies to explosion-proof motors:

Since the requirements of explosion-proof motors comply with the European standards EN 60079-0, EN 60079-15, EN 60079-31 and Directive 94/9/EC (ATEX 95), the certificates issued by authorized testing agencies (PTB, FTZU, etc.) are accepted by all member states of the EU. The remaining members of CENELEC, Switzerland in particular, also accept the certificates.

Tolerances for electrical data

According to EN 60034, the following tolerances are permitted: Motors which comply with EN 60034-1 must have a voltage tolerance of ±5 % / frequency tolerance of ±2 % (Design A). If utilized, the admissible limit temperature of the temperature class may be exceeded by 10 K.

Efficiency η at
$P_{rated} \leq 150$ kW: $-0.15 \cdot (1 - \eta)$
$P_{rated} > 150$ kW: $-0.1 \cdot (1 - \eta)$

With η being a decimal number.

$$\text{Power factor} \quad -\frac{1-\cos\varphi}{6}$$

- Minimum absolute value: 0.02
- Maximum absolute value: 0.07

Slip ±20 % (for motors < 1 kW ±30 % is admissible)
Locked-rotor current +20 %
Locked-rotor torque –15% to +25 %
Breakdown torque –10%
Moment of inertia ±10 %

Certifications

Product certifications are differentiated in terms of safety-related certificates and efficiency certificates.

Since 2011, it has been obligatory for low-voltage motors with outputs in the range of 0.75 to 375 kW (2, 4 and 6-pole) to be classified in accordance with the IEC 60034-30 efficiency standard and to be marked with the corresponding IE code (International Efficiency IE1, IE2 or IE3). The efficiency is determined using the summed losses method in accordance with IEC 60034-2-1.

Energy-saving motors for the European Economic Area in accordance with EU Directive 640/2009

Since June 2011, all low-voltage motors that fall within the scope of the EU directive must fulfill the specifications of international efficiency class IE2.

- Line voltage ≤ 1000 V
- Line frequency 50 or 50/60 Hz
- Power range 0.75 to 375 kW
- Pole number 2, 4 and 6-pole
- Uninterrupted duty S1

In January 2015, the efficiency requirement for motors within the 7.5 to 375 kW range will be increased to IE3 level. IE2 motors are only admissible if they are speed-controlled via converters.

This will also apply from January 2017 for 0.75 to < 7.5 kW motors.

© Siemens AG 2015

Overview (continued)

Energy-saving motors for the North-American economic area in accordance with EISA

A new EISA rule (Energy) will come into effect on June 1, 2016. This rule stipulates that all motors must comply with the requirements stated in NEMA MG1 Table 12-12 (NPE).
From this date onwards, motors previously covered by the EPAct must also comply with NPE.

- Line voltage ≤ 600 V
- Line frequency 60 Hz
- Power range 1 HP to 500 HP
- Number of poles: 2, 4, 6, 8-pole motors and geared motors
- Uninterrupted duty S1

Explosion-proof motors are also included.

Exclusions from the EISA efficiency requirements

- Brake motors
- Converter motors

Note:

Option **D30**: el. acc. to NEMA
Option **D31**: UL version

These options can be ordered for motors that are not subject to the EISA specifications (e.g. for use outside North America).

Options **D30** and **D31** do not authorize operation within North America.

NEMA Premium®

The logo NEMA Premium is a registered trademark. It is only permitted to be used by companies that voluntarily submit to the control of the NEMA organization.

Approval for the USA: UL safety and DoE listing

For the USA, motor series **1LE1 .21** (NEE only available until May 31, 2016) and **1LE1 .23** (NPE) are listed at the Department of Energy (DoE) and marked with the certification number **CC032A**.

Additional specifications to NEMA MG1: Nominal efficiency acc. to NEMA MG1 Table 12-11 or Table 12-12, design letter, code letter, CONT, CC No. CC 032A (Siemens) and service factor SF 1.15.

Motor series 1LE1 .21 and 1LE1 .23 remain certified up to a rated voltage of 600 V from Underwriters Laboratories Inc. and are marked accordingly ("Recognition Mark" = R/C).

c UL us CC032A

UL approval does not apply to Zone 2, 21, 22 motors or marine motors.

Note:
As of June 1, 2016, only those motors with a minimum efficiency rating in accordance with MG1 Table 12-12 (NEMA Premium) will be permitted to be offered for sale. From this date, operation of all 1LE1.21 motors with a minimum efficiency of NEE will no longer be permitted in the USA.

Approval for Canada: CSA safety and CSA Energy Efficiency Verification

In April 2012, the EISA requirements were implemented in Canada; in this case all outputs are subject to certification without the restrictions applicable to the NEMA frame sizes. Motor series 1LE1.21 and 1LE1.23 are certified for Canada through the Canadian Standard Association (CSA), listed by the Office of Energy Efficiency (OEE) and marked with both the CSA safety logo and the CSA efficiency label. These motors comply with the efficiency requirements of the new CSA standard C390-10. The efficiency is determined in the same manner as with IEC 60034-2-1.

SA®

Externally or internally mounted components which are used are listed by CSA or are used by manufacturers in accordance with regulations. It may have to be decided whether the motor is suitable for the application. Approval does not apply to Zone 2, 21, 22 for 1MB1 motors or marine motors.

Not possible in combination with order code **N11** "Temperature class 180 (H) for rated output and maximum coolant temperature 60 °C".

Approval for Mexico:

The EISA regulations are applicable for Mexico.

Korea certification – Order code **D33**

Minimum efficiencies required by law

According to a legislative amendment with reference to the MKE-2015-28 (Ministry of Knowledge Economy Korea) dated February 12, 2015, Minimum Efficiency IE3 shall become obligatory in Korea by the following dates:

- 01.10. 2015 for motors from 37 to 200 kW
- 01.10. 2016 for motors from 200 to 375 kW
- 01.10. 2018 for motors from 0.75 to 37 kW

For this reason, we shall be launching the SIMOTICS GP/SD APAC (Asia/Pacific) series with efficiency class IE3 (which complies with the IE3 energy efficiency requirements for line frequencies 50 Hz and 60 Hz (P50) onto this market:

- SIMOTICS GP,
  1LE1043 motor series – 2-, 4- and 6-pole motors
- SIMOTICS SD,
  1LE1543 and 1LE1643 motor series – 2-, 4- and 6-pole motors

Scope of Korean standard KS C 60034-2-1

This Korean standard is applicable to three-phase asynchronous motors with the following parameters:

- Voltage: ≤ 600 V
- Power supply: 60 Hz three-phase
- Rated power: 0.75 ... 375 kW
- Number of poles: 2, 4, 6 and 8
- Speed: Constant
- Coolant temperature: ≤ 40 °C
- Mounting method: Foot or flange-mounted

© Siemens AG 2015

Overview (continued)

Korea Energy Label

Option **D33** KEMCO (Korea Energy Management Cooperation KEMCO) Korea Energy Efficiency Label can be ordered only for those motors which comply with Korean efficiency requirements. Confirmation that the motor efficiency and power factor comply with KS C 60034-2-1 is provided by certification.

The Korea Energy Label includes the following information:

- Full-load efficiency
- Motor Type (MT)
- Rated output power
- No. of poles
- CO^2 emissions per hour
- Energy costs per annum



Rating plate

KEMCO-certified motors with option code **D33** are fitted with a modified rating plate that indicates the permissible minimum energy efficiency value (P50 for 60 Hz) in accordance with the Korean Energy Efficiency Ordinance with reference to Korean Standard KS C IEC60034-2-1.

The energy efficiency values stipulated by KS C IEC60034 are identical to the international efficiency values IE (IEC 60034-30).

SIEMENS IE3

Made in Czech Rep.
3~Mot. 1CV3314B 1LE15433AB434AA4 UC 1503/999999901

IEC/EN 60034 315L		IMB3		IP55			
990kg	Th.Cl.155(F)	-20°C<= TAMB<=40°C					
	Bearing	UNIREX-N3					
DE	6319-C3	40g	Interval: 6000h				
NE	6319-C3	40g					

KS C IEC60034-2-1

V	Hz	A	kW	cosφ	NOM.EFF	1/min	IE-CL
400 Δ	50	275	160	0.87	95.8 %	1490	IE3
690 Y	50	161	160	0.87	95.8 %	1490	IE3
460 Δ	60	275	184	0.88	96.2 %	1788	IE3
460 Δ	60	240	160	0.87	96.2 %	1791	IE3

G_D081_XX_00544

You will find a complete list of KEMCO-certified motors (APAC series) on the selection pages in Chapter 2.

1PC3 motors: 1PC3 motors are also covered by certification provided that the electrical design complies with local requirements as stipulated in standard KS C IEC 60034-2-1. Please contact QC for further clarification if required.

Motors from the APAC series can be ordered with or without option **D33** depending on the final destination region.

Energy-saving motors for China: China Energy Label

In 2012, the directive for the China Energy Label was redefined. Applicability was extended to explosion-proof motors.

- Line voltage ≤ 1000 V
- Line frequency 50 Hz
- Power range 0.75 kW to 375 kW
- Number of poles: 2-, 4-, 6-pole
- Uninterrupted duty S1

The minimum requirements for the efficiency classes previously defined in the Chinese standard GB18613-2006 were classified in the new standard GB18613-2012 (Minimum Allowable Values of Energy Efficiency and Energy Efficiency Grades for Small and Medium Three-Phase Asynchronous Motors) in accordance with International Efficiency IE2-4.



IEC IE class	GB18613-2006	GB18613-2012
IE4		Grade 1
IE3	Grade 1 old	Grade 2
IE2	Grade 2 old	Grade 3
IE1	Grade 3 old	

The series 1LE1001 plus order code **D34** was previously certified in frame sizes 100 to 160 for China Energy Label 2012 and expansion of the certificate is planned.

CCC safety certification is also required for motors with lower outputs.

CCC - China Compulsory Certification – Order code **D01**

Motors with low outputs, "Small power motors", which are exported to China must be certified up to a rated output of:

- 2-pole: ≤ 2.2 kW
- 4-pole: ≤ 1.1 kW
- 6-pole: ≤ 0.75 kW
- 8-pole: ≤ 0.55 kW

Certification of the 1LE1 series will be undertaken in parallel with expansion of the CEL certificate.

Notes:

Chinese customs checks the need for certification of imported products by means of the commodity code.

The following do not require CCC certification:

- Explosion-proof motors
- Multi-voltage motors
- Multi-speed motors with outputs higher than those listed above
- Repair parts

© Siemens AG 2015

Overview (continued)

VIK version
VIK = Verband der Industriellen Energie- und Kraftwirtschaft e.V. (German Association of the Energy and Power Supply Industry)

- **VIK standard version** – 1LE1 + order code **C02**
  "VIK" identification on rating plate.
  ➔ Product spectrum catalog section 2.
- **VIK-Ex n version** – 1MB1.3 + order code **C02**
  "VIK" and "Ex nA IIC T3 Gc" marking on the rating plate according to Directive 94/9/EC (ATEX).
  ➔ Product spectrum catalog section 4.

Both versions include technology for Zone 2 to type of protection Ex nA IIC T3 Gc. Motors up to frame size 355 can be supplied in accordance with the technical requirements of the VIK recommendation.

Minimum efficiency class:

- VIK standard version:
  IE3 from 7.5 kW in accordance with legal requirements.
- VIK Ex n version:
  At least IE2 in accordance with March 2011 edition of VIK recommendation.

Notes:

- 8-pole motors or all motors < 0.75 kW are still possible as these motors are outside the output range specified for IE stamping.
- Please inquire about converter operation in all cases.
- Motors in VIK design with mounted technology (brake, rotary pulse encoder and separately driven fan) are not compatible with Zone 2. Designs for Zone 21/22 are not possible.
- VIK motors 1LA/1LG: See Catalog D 81.1 · January 2012.

TR CU product safety certificate EAC for the Eurasian customs union (Russia, Belarus, Kazakhstan)
TR CU = Technical Regulation Customs Union
EAC = Eurasian Conformity

The TR CU product safety certificate is required in order to import motors into the Eurasian customs union area.

"TR CU product safety certificate EAC for Eurasian customs union" – order code **D47**

When motors are ordered with order code **D47**, the motor rating plate and packaging are marked with the logo "EAC".

The motor must have a "TR CU product safety certificate EAC", although the certificate does not generally have to be shipped with the motor. The customs authorities use the motor article number to check the motor certification.

The following are available in the SIOS (Siemens Industry Online Support) and the Drive Technology Configurator:

- TR CU product safety certificate in accordance with the Low-Voltage Directive
- Additional TR CU product certificate in accordance with the EMC Directive.

Train-compatible version

Train-compatible version – order code **L82**
(1LE100 aluminum motors in frame sizes 80 to 200)

- Electrical design in accordance with EN IEC 60349; $U_{rated} \leq 500$ V AC.
- DC-link voltage: $U_{dc} \leq 700$ V – $dv/dt \leq 5$ kV/µs
- Vibration resistance to Class 3M4 according to IEC 60721-3-3
- Metal cable gland
- Including external grounding depending on construction type (corresponds to order code **H04**).
- Standard finish certified according to EN 45545 (polyurethane-based paint without test certificate – corresponds to order code **S06**)

Recommended supplementary options:

- Located bearing DE (order code **L20**)
- Temperature class 155 (F), utilized according to 130 (B), coolant temperature 55 °C, derating approx. 13 % (order code **N07**)
- Coolant temperature –30 to +40 °C (order code **D04**)
- Coolant temperature -40 to +40 °C (order code **D03**)

© Siemens AG 2015

Overview

The order variants for motor protection are coded with letters in the 15th position of the Article No. and, if necessary, using order codes.

In the standard version, the motor is designed without motor protection.
15th position of Article No. letter **A**

A distinction is made between current-dependent and motor-temperature-dependent protection devices.

The following applies to all motors:

The motors can withstand 1.5 times the rated current at rated voltage and frequency for two minutes (EN 60034).

Current-dependent protection devices

Fuses are only used to protect line cables in the event of a short-circuit. They are not suitable for overload protection of the motor.

The motors are usually protected by thermally delayed overload protection devices (circuit breakers for motor protection or overload relays).

This protection is current-dependent and is particularly effective in the case of a locked rotor.

For standard duty with short start-up times and starting currents not too excessive and for low numbers of switching operations, motor protection switches provide adequate protection. Motor protection switches are not suitable for heavy starting duty or large numbers of switching operations. Differences in the thermal time constants for the protection equipment and the motor result in unnecessary early tripping when the protection switch is set to rated current.

Motor-temperature-dependent protective devices and motor temperature detection with converter operation

Depending on the specific requirements, various different components can be built into the motor winding for switching off the motor before it overheats and for monitoring the winding temperature and motor temperature.

Temperature detectors – Bimetal switches

Bimetal switches operate on the principle of mechanical deformation as a result of long-term heating. Bimetal strips bent as a result of such heating have a spring action that results in sudden reversal of the curvature (concave to convex or vice-versa).

When a limit temperature is reached, these temperature detectors (NC contacts) can deactivate an auxiliary circuit. The circuit can only be reclosed following a considerable fall in temperature. Bimetal switches are suitable protection devices in the case of slowly rising motor temperatures. When the motor current rises quickly (e.g. with a locked rotor), these switches are not suitable due to their large thermal time constants.
Temperature detectors for tripping
15th position of Article No. letter **Z** and order code **Q3A**

The temperature detectors have the following current-carrying capacity and switching capacity:
230 V, AC 2.5 A
24 V, DC: 1.6 A

PTC thermistors – Thermistor motor protection

PTC thermistors provide the most comprehensive protection against thermal overloading of the motor. A rise in the winding temperature over the permissible value can be accurately detected thanks to the low heat capacity of these PTC (Positive Temperature Coefficient) thermistors and their excellent heat contact with the winding. When the limit temperature is reached (rated tripping temperature), the PTC thermistors undergo a sudden change in resistance. This is evaluated by a tripping unit and can be used to open auxiliary circuits. PTC thermistors cannot themselves be subjected to high currents and voltages. This would result in destruction of the semiconductor. The switching hysteresis of the PTC thermistor and tripping unit is low, which supports fast restarting of the drive. Motor protection of this type is recommended for heavy duty starting, switching duty, extreme changes in load, high ambient temperatures or fluctuating supply systems.

Motor protection with PTC thermistor for tripping. In the terminal box, 2 auxiliary terminals are required.
15th position of Article No. letter **B**

Two temperature sensor circuits are used if a warning is required before the motor is shut down (tripped). The warning is normally set to 10 K below the tripping temperature.

Motor protection with PTC thermistor for alarm and tripping.
In the terminal box, 4 auxiliary terminals are required.
15th position of Article No. letter **C**

In order to achieve full thermal protection it is necessary to combine a thermally delayed overcurrent release and a PTC thermistor. For full motor protection implemented only with PTC thermistors, please inquire.

PTC sensor characteristic

The PTC thermistor is a temperature-dependent component. At the smallest changes in temperature in the region of the rated shutdown temperature, the resistance of the PTC increases steeply.

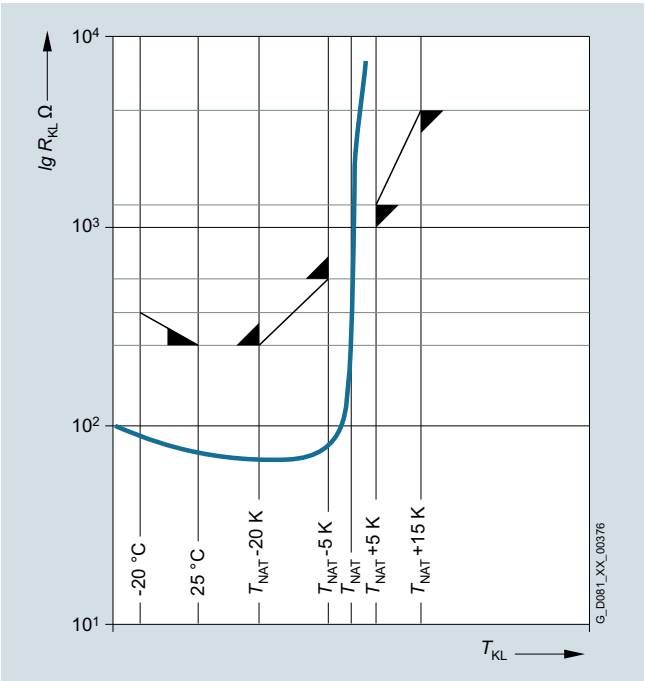

PTC sensor characteristic

© Siemens AG 2015

Overview (continued)

NTC thermistor

NTC thermistors have a negative temperature coefficient and conduct current at higher temperatures better than at lower temperatures.

NTC thermistors are typically used for temperature compensation of electronic circuits, or to limit inrush currents, to achieve the soft starting of electrical machines, for example.

Motor temperature monitoring and shutdown using NTC thermistors is unusual, but it is technically possible. The tripping temperature can be set when using suitable tripping devices of this type.

NTC thermistors for tripping 15th position of Article No. letter **Z** and order code **Q2A**

NTC thermistor characteristic

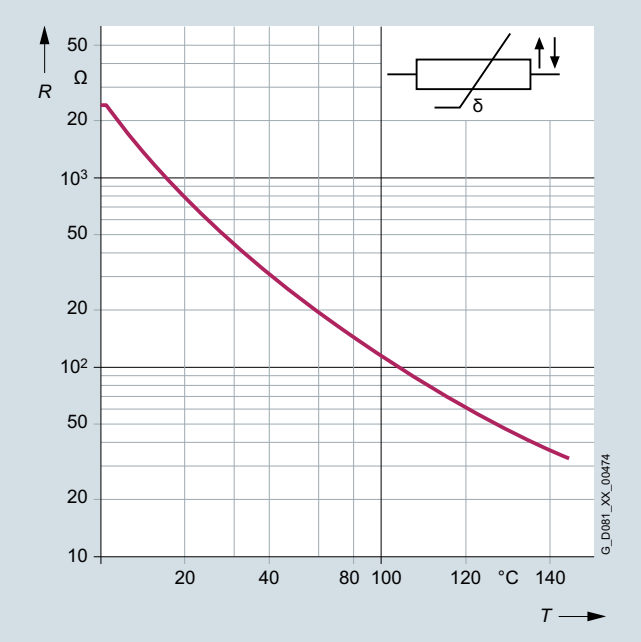

KTY 84-130 temperature sensor

This temperature sensor is a semiconductor which, in a similar manner to a PTC thermistor, changes its resistance as a function of its temperature at a defined rate. Within the measuring range, however, the KTY 84-130 characteristic rises almost linearly. The temperature sensor is embedded in the winding overhang of the motor in the same way as the components mentioned above. It is characterized by its outstanding precision, high reliability and temperature stability, as well as a fast response time. Thanks to these properties, which permit the almost analog monitoring of winding temperature, the KTY 84-130 is preferred for converter operation.

Motor temperature detection with embedded temperature sensor KTY 84-130. Two auxiliary terminals are required in the terminal box.
15th position of Article No. letter **F**

Temperatures for warning and shutdown can be set as required when using converters from Siemens that determine the motor temperature in accordance with the measuring principle described above. With these devices, the measured signal is evaluated directly in the converter.
For line operation, the temperature monitoring device 3RS10, which forms part of the protection equipment, can be ordered separately.
For further details, see Catalog IC 10, Article No.: E86060-K1010-A101-A4.

KTY 84-130 temperature sensor characteristic

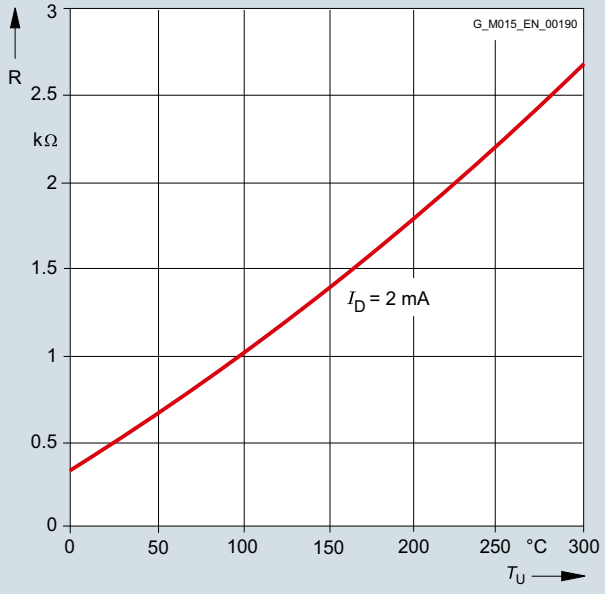

© Siemens AG 2015

Overview (continued)

Pt100 resistance thermometer
Resistance thermometers utilize the relationship between the temperature and electrical resistance of conductors to measure temperature in a similar manner to the electronic components described above.
Pure metals undergo larger changes in resistance than alloys and have relatively constant temperature coefficients.
The temperature sensor in the Pt100 is a platinum wire winding, the resistance of which changes in relation to temperature according to a series of reproducible basic values. The changes in resistance are transferred as changes in current. The measuring resistors have a bifilar winding and are calibrated to 100 Ω ± 0 Ω at 0 °C. The basic values for the resistances (i.e. the relationship between the resistance and temperature) as well as the admissible deviations are laid down in EN 60751.

Order code **Q72**
Order code **Q78**
Order code **Q79**

Pt100 resistance thermometer characteristic

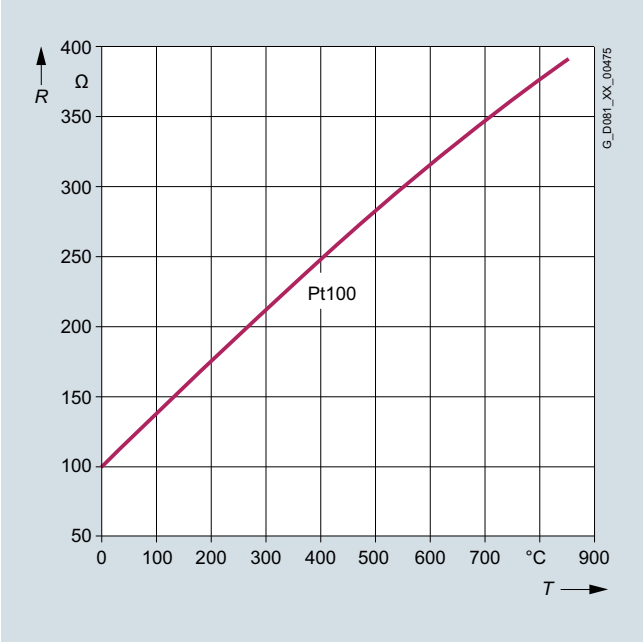

© Siemens AG 2015

Overview

Voltages, currents and frequencies

Standard voltages

EN 60034-1 differentiates between Category A (combination of voltage deviation ±5 % and frequency deviation ±2 %) and Category B (combination of voltage deviation ±10 % and frequency deviation +3/–5 %) for voltage and frequency fluctuations. The motors can supply their rated torque in both Category A and Category B. In Category A, the temperature rise is approx. 10 K higher than during rated operation.

Standard	Category	Category
IEC 60034-1	A	B
Voltage deviation Frequency deviation	±5 % ±2 %	±10 % +3 %/–5 %
Rating plate data stamped with rated voltage a (e.g. 230 V)	a ±5 % (e.g. 230 V ±5 %)	a ±10 % (e.g. 230 ±10 %)
Rating plate data stamped with rated voltage ranges b to c (e.g. 220 to 240 V)	b –5 % to c +5 % (e.g. 220 –5 % to 240 +5 %)	b –10 % to c +10 % (e.g. 220 –10 % to 240 +10 %)

For further details, see EN 60034-1.

In Category B, the standard does not recommend extended operation, so it is not permissible for explosion-proof motors. See "Rating plate and extra rating plates" for details of the rating plate inscriptions and corresponding examples. The selection and ordering data state the rated current at 400 V. The IEC 60038 standard specifies a tolerance of ±10 % for line voltages of 230 V, 400 V and 690 V.

Line voltages	Voltage code
1LE1 motors	
230 VΔ/400 VY, 50 Hz	22
400 VΔ/690 VY, 50 Hz	34
500 VY, 50 Hz	27
500 VΔ, 50 Hz	40

Non-standard voltages and/or frequencies

The tolerance laid down by EN 60034-1 applies to all non-standard voltages.
Order codes have been allocated for a number of non-standard voltages at 50 or 60 Hz. They are ordered by specifying the code digit **9** for voltage in the 12th position of the Article No. as well as the code digit **0** in the 13th position of the Article No. and the appropriate order code.

M1Y Non-standard rated voltage between 200 V and 690 V (voltages outside this range are available on request), frequency, circuit, for 60 Hz additionally required rated output in kW.

Motor series	Frame size	Rated voltages that can be supplied for M1Y Lowest/highest voltage for	
		Delta	Star
1LE1, 1MB1	71 … 315	200/690 V	250/690 V

Order codes for other rated voltages are listed under "Article No. supplements" in the "Selection and ordering data" as well as "Special versions" under "Voltages".

Line voltages according to NEMA

Assignment of rated voltage of the motor to that of the line

Line voltage	Motor voltage
208 V	200 V
240 V	230 V
480 V	460 V
600 V	575 V

Outputs

The outputs or rated outputs are listed in the selection tables for both 50 Hz and 60 Hz. For 60 Hz, the rated output values must, in some cases, be increased, e.g. for pole-changing motors.

Assignment of standard outputs kW-HP and vice versa, in accordance with IEC

kW · 1.341 = HP
HP · 0.746 = kW

P_{rated} kW	P_{rated} HP	P_{rated} kW	P_{rated} HP	P_{rated} kW	P_{rated} HP	P_{rated} kW	P_{rated} HP	P_{rated} kW	P_{rated} HP	P_{rated} kW	P_{rated} HP
0.06	0.08	0.37	0.5	2.2	3	11	15	37	50	110	150
0.09	0.12	0.55	0.75	3	4	15	20	45	60	132	200
0.12	0.16	0.75	1	4	5	18.5	25	55	75	160	250
0.18	0.25	1.1	1.5	5.5	7.5	22	30	75	100	200	300
0.25	0.33	1.5	2	7.5	10	30	40	90	125		

© Siemens AG 2015

Overview

EN 60034-1 lays down that the approximate total weight for all motors is indicated on the rating plate.

Supplementary data (maximum of 20 characters) can be indicated on the rating plate or extra rating plate and on the packaging label,
order code **Y84**.

An adhesive label can also be supplied loose
order code **Y85**

An extra rating plate for customer specifications is also possible, additional text: 9 lines of 40 characters each,
order code **Y82**.

An extra rating plate or a rating plate with different rating plate data can also be ordered (only for ratings such as voltage, output, speed),
order code **Y80**.

An "extra rating plate for voltage tolerance" can also be ordered. Can be ordered for 230 VΔ/400 VY or 400 VΔ/690 VY (voltage code "22" or "34"). Not possible for pole-changing motors, naturally cooled 1PC1 motors, 8-pole motors and in combination with order code D34.
Order code **B07**
(voltage range plate is always provided in the form of an adhesive label)

The number of rating plates and/or the material quality of the rating plate including extra rating plates can be ordered using order codes Y82, Y84 and Y80. Does not apply to order code B07, rotational direction arrows, PTC thermistor plates, other notices.

- Extra (rating) plate(s)
  Order code **M10**
- Plate(s) with resistance to scratches, heat, cold and acid
  Order code **M11**

In the standard version, the rating plate is available in international format or in the German/English language. The language for the rating plate can be ordered by specifying in plain text. An overview of the languages that can be ordered is provided by the table below.

Overview of the languages on the rating plate

Motor type	Frame size	Rating plate	
		German (de)	English (en)
1LE10	80 …200	□	○
1LE15/6	71 … 315	□	○
1MB1	80 … 315	□	○
1PC1	100 … 315	□	○

□ Standard version
○ Without additional charge

Other languages on request

Examples of rating plates

SIEMENS Made in Germany IEC&EN 60034 CE

3~Mot. 2AV2094A 1LE10010EA422AA4 TH.CL.155(F) IP55
F no E1410/5400001_01 001 FS 90L IMB3 WT 16kg

V	Hz	kW	A	PF	RPM	EFF-CL	ETA %	
230 Δ	50	2.2	7.8	0.85	2890	IE2	83.2	IE2
400 Y	50	2.2	4.50	0.85	2890	IE2	83.2	Ⓗ
460 Y	60	2.55	4.35	0.86	3485	IE2	85.5	

G_D081_XX_00513

SIEMENS IE3 Ⓗ CE
Made in Czech Rep.
3~Mot. 1AV3094A 1LE10430EA422AA0-Z UD 1410/1410842-001-001
IEC/EN 60034 90L IMB3 IP55
20kg Th.Cl.155(F) -20°C<=TAMB<=40°C
Bearing
DE 6205-2ZC3
NE 6004-2ZC3

V	Hz	A	kW	cos φ	NOM.EFF	1/min	IE-CL
230 Δ	50	7.3	2.20	0.88	85.9	2910	IE3
400 Y	50	4.20	2.20	0.88	85.9	2910	IE3
460 Y	60	4.20	2.55	0.88	86.5	3510	IE3
460 Y	60	3.65	2.20	0.87	86.5	3530	IE3

G_D081_XX_00514

SIEMENS NEMA Premium CC 032A IE3 Ⓗ CE
Made in Czech Rep.
3~Mot. 1AV3162A 1LE10231DA222AA4 UD 1410/1410842-001-001
IEC/EN 60034 160M IMB3 IP55
75kg Th.Cl.155(F) -20°C<=TAMB<=40°C
Bearing
DE 6209-2ZC3
NE 6209-2ZC3
60Hz: SF 1.15 CONT NEMA MG1 12-12 TEFC Design A 15.0HP

V	Hz	A	kW	PF	NOM.EFF	rpm	IE-CL		CL
230 Δ	50	35.0	11.0	0.87	91.2	2955	IE3		K
400 Y	50	20.0	11.0	0.87	91.2	2955	IE3		K
460 Y	60	19.5	12.6	0.89	91.0	3555	IE3		K
460 Y	60	17.2	11.0	0.88	91.0	3560	MG1		L

G_D081_XX_00515

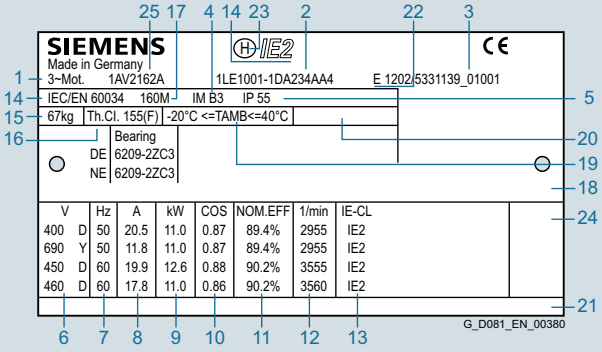

1 Type of machine: AC low-voltage motor
2 Article No.
3 Factory number (Ident.-No., serial number)
4 Type of construction
5 Degree of protection
6 Rated voltage [V] and winding connections
7 Frequency [Hz]
8 Rated current [A]
9 Rated output [kW]
10 Power factor (cos φ)
11 Efficiency
12 Rated torque [rpm]
13 IE Efficiency Class
14 Standards and specifications
15 Weight of machine [kg]
16 Temperature class
17 Frame size
18 Supplementary data (optional)
19 Operating temperature range (only when deviating from the standard)
20 Installation altitude (only if higher than 1000 m)
21 Customer information (optional)
22 Date of manufacturing YYMM
23 Half-key balancing
24 Code letter "CL"
25 Motor type number (MT)

© Siemens AG 2015

Overview

Efficiency and power factor

The efficiency η for 4/4, 3/4 and 1/2 load and the power factor cos φ for each rated output are listed in the selection tables in the individual sections of this catalog.
See page 1/2 for minimum efficiencies.

Rated speed and direction of rotation

The rated speeds are applicable for the rated data. The synchronous speed changes proportionally with the line frequency.
The motors are suitable for clockwise and counter-clockwise rotation.

If U1, V1, W1 are connected to L1, L2, L3, clockwise rotation results as viewed onto the drive-end shaft extension. Counter-clockwise rotation is achieved by swapping two phases (see also "Heating and ventilation" on Page 1/30).

Rated torque

The rated torque in Nm delivered at the motor shaft is

$$T = \frac{9.55 \cdot P \cdot 1000}{n}$$

P Rated output in kW
n Speed in rpm

Note:
If the voltage deviates from its rated value within the admissible limits, the locked-rotor torque, the pull-up torque and the breakdown torque vary with the approximate square of the value, but the locked-rotor current varies approximately linearly.

In the case of squirrel-cage motors, the locked-rotor torque and breakdown torque are listed in the selection tables as multiples of the rated torque.
The normal practice is to start squirrel-cage motors directly on line. The torque class indicates that with direct-on-line starting, even if there is an undervoltage of –5 %, it is possible to start up the motor against a load torque of

- 160 % for CL 16
- 130 % for CL 13
- 100 % for CL 10
- 70 % for CL 7
- 50 % for CL 5

of the rated torque.

© Siemens AG 2015

Overview

DURIGNIT IR 2000 insulation

The DURIGNIT IR 2000 insulation system comprises high-grade enameled wires and insulating sheet materials combined with temperature-resistant impregnating resin.
The system ensures a high level of mechanical and electrical strength as well as good serviceability and a long motor life. The insulation system protects the winding to a large degree against aggressive gases, vapors, dust, oil and increased air humidity. It can withstand the usual vibration stressing. The insulation is suitable up to an absolute air humidity of 30 g water per m^3 of air. Moisture condensation should be prevented from forming on the winding. Options **N20** and **N21** are available for higher values – see Page 1/28.

Please inquire about extreme applications.

Restarting against residual field and opposite phase

All motors can be restarted against 100 % residual field after a line voltage failure.

Winding and insulation design with regard to temperature class

All motors are designed for temperature class 155 (F).
At rated output with line operation, the motors can be used in temperature class 130 (B).

Temperature class 155 (F), utilized according to 155 (F), with service factor (SF)

According to the selection table, at rated output and rated voltage, all 1LE1/1PC1 motors in line operation have a service factor of 1.15, with the exception of IE1 motors, which have a service factor of 1.1.
Order code **N01**

Temperature class 155 (F), utilized according to 155 (F), for increased output

When utilized according to temperature class 155 (F), the rated output specified in the selection and ordering data can be increased by 15 %. Exception for IE1 motors – Can be increased by 10 %.
Order code **N02**

Temperature class 155 (F), utilized according to 155 (F), with increased coolant temperature

With outputs as defined in the catalog and line operation, coolant temperature is permitted to rise to 55 °C.
Order code **N03**

The service factor (SF) is not indicated on the rating plate for order codes **N02** and **N03**.
For converter operation at the output specified in the catalog, the motors are utilized according to temperature class 155 (F).
Order codes **N01**, **N02** and **N03** are not possible.

Temperature class 155 (F), utilized according to 155 (F), other requirements

The motors can be ordered according to temperature class 155 (F) for utilization according to temperature class 155 (F) with other customized requirements if they are specified in plain text in the order.
Order code **Y52**

Temperature class 155 (F), utilized according to 130 (B), other requirements

The motors can be ordered according to temperature class 155 (F) for utilization according to temperature class 130 (B) with other customized requirements if they are specified in plain text in the order.
Order code **Y50**

Temperature class 180 (H), utilized according to 155 (F), other requirements

The motors can be ordered according to temperature class 180 (H) for utilization according to temperature class 155 (F) with other customized requirements if they are specified in plain text in the order.
Order code **Y75**

Temperature class 180 (H), utilized acc. to 180 (H) for rated output and maximum coolant temperature CT 60 °C

With motor series 1LE1, and 1PC1, utilization according to temperature class 180 (H) is permitted at rated output and a maximum coolant temperature of 60 °C. This does not apply to motor series 1LE1 and 1PC1 with UL approval (order code **D31**) and CSA authorization (order code **D40**). The specified service life of grease is applicable to a coolant temperature of 40 °C. For an increase in coolant temperature of 10 K, the service life of grease or relubrication interval is halved.
Order code **N11** (not possible for 1LE15 and 1LE16 motors with increased output)

Temperature class 155 (F), utilized according to 130 (B), coolant temperature 45 °C, derating approx. 4 %

Motor series 1LE1 and 1MB1 can be ordered according to temperature class 155 (F) for utilization according to temperature class 130 (B) and a maximum coolant temperature of 45 °C with derating of 4 %.
Order code **N05**

Temperature class 155 (F), utilized according to 130 (B), coolant temperature 50 °C, derating approx. 8 %

Motor series 1LE1 and 1MB1 can be ordered according to temperature class 155 (F) for utilization according to temperature class 130 (B) and a maximum coolant temperature of 50 °C with derating of 8 %.
Order code **N06**

Temperature class 155 (F), utilized according to 130 (B), coolant temperature 55 °C, derating approx. 13 %

Motor series 1LE1 and 1MB1 can be ordered according to temperature class 155 (F) for utilization according to temperature class 130 (B) and a maximum coolant temperature of 55 °C with derating of 13 %.
Order code **N07**

Temperature class 155 (F), utilized according to 130 (B), coolant temperature 60 °C, derating approx. 18 %

Motor series 1LE1 and 1MB1 can be ordered according to temperature class 155 (F) for utilization according to temperature class 130 (B) and a maximum coolant temperature of 60 °C with derating of 18 %.
Order code **N08**

© Siemens AG 2015

Overview (continued)

Increased air humidity/temperature with 30 to 60 g water per m^3 of air

With motor series, 1LE1, 1MB1 and 1PC1, motors are available in a version designed for increased air humidity in the range of 30 to 60 g water per m^3 of air, depending on the temperature, as shown in the table below. This version has condensation drainage holes (sealed).
Order code **N20** (comprises order codes **H03** and **M11**)
Please inquire before combining order code **N20** with mountings (e.g. rotary pulse encoder, brakes)!

Increased air humidity/temperature with over 60 to 100 g water per m^3 of air

With motor series, 1LE1, 1MB1 and 1PC1, motors are available in a version designed for increased air humidity of over 60 to 100 g water per m^3 of air, depending on the temperature, as shown in the table below. This version has condensation drainage holes.
Order code **N21** (comprises order codes **H03** and **M11**)
Please inquire before combining order code **N21** with mountings (e.g. rotary pulse encoder, brakes)!

Absolute/relative conversion of air humidity

Relative humidity	Temperature							
	up to 20 °C	up to 30 °C	up to 40 °C	up to 50 °C	up to 60 °C	up to 70 °C	up to 80 °C	up to 90 °C
10 %	2	3	5	8	13	20	29	42
15 %	3	5	8	12	19	30	44	63
20 %	3	6	10	17	26	39	58	84
25 %	4	8	13	21	32	49	73	105
30 %	5	9	15	25	39	59	87	126
35 %	6	11	18	29	45	69	102	146
40 %	7	12	20	33	52	79	116	167
45 %	8	14	23	37	58	89	131	188
50 %	9	15	26	41	65	98	145	209
55 %	10	17	28	46	71	108	160	230
60 %	10	19	31	50	78	118	174	251
65 %	11	20	33	54	84	128	189	272
70 %	12	21	36	58	91	138	203	293
75 %	13	23	38	62	97	148	218	314
80 %	14	24	41	66	104	157	233	335
85 %	15	26	43	70	110	167	247	356
90 %	16	27	46	74	117	177	262	377
95 %	16	29	49	79	123	187	276	398
100 %	17	30	51	83	130	197	291	419

The values in the table with a blue background are covered by the standard version (up to 30 g water per m^3 of air).
The values in the table with a light gray background are covered by order code **N20** (30 to 60 g of water per m^3 of air).
The values in the table with a dark gray background are covered by order code **N21** (60 to 100 g of water per m^3 of air).

Please contact your local Siemens office regarding requirements exceeding 100 g water per m^3 of air.

Note:
Information about coolant temperature and installation altitude can be found on page 1/72 onwards!

© Siemens AG 2015

Overview

Anti-condensation heaters

Supply voltage 230 V (1~)
Order code **Q02**

Supply voltage 115 V (1~)
Order code **Q03**

For motors whose windings are at risk of condensation due to the climatic conditions, e.g. inactive motors in humid atmospheres or motors that are subjected to widely fluctuating temperatures, anti-condensation heaters must be used.
An additional cable entry is provided for the connecting cable in the terminal box.

Motor series	Frame size	Cable entry
Aluminum motors (GP)	≤ 200	1 x M16 x 1.5
Cast-iron motors (SD)	≤ 180	1 x M16 x 1.5
	200	1 x M20 x 1.5
	≥ 225	2 x M20 x 1.5

Anti-condensation heating must not be switched on during operation.

Frame size	Heat output of the anti-condensation heating	
	Supply voltage at	
	230 V	115 V (110 V)
	Order code **Q02**	Order code **Q03**
	W	W
1LE1/1PC1 motors		
71 ... 80	12.5	12.5
90 … 112	25	25
132 … 200	50	50
225 … 250	92	92
280 …315	109	109
1MB1 motors		
80 ... 112	7	7
132 … 160	12	12
180 … 200	57	57
225 … 250	92	92
280 …315	109	109

Instead of an anti-condensation heater, another possibility is to connect a voltage that is approximately 4 to 10 % of the rated motor voltage to stator terminals U1 and V1; 20 to 30 % of rated motor current is sufficient to heat the motor.

Fans/Separately driven fans

1LE1 and 1MB1 motors of frame size 71 to 315 have radial-flow fans in the standard version (with the exception of 1LE1, 1MB1 with option **F90** – version "Forced-air cooled motors without external fan and fan cover") that cool regardless of the direction of rotation of the motor (cooling method IC411 acc. to EN 60034-6). The air flow is forced from the non-drive-end (NDE) to the drive end (DE).
For details of separately driven fans for frame size 100 to 315, see also "Separately driven fans" on Page 1/73.

Supply voltage of separately driven fan for 1LE1 motors:
The supply voltage tolerance of the separately driven fan is ±5 %. For voltage ranges, see Page 1/73.

In confined spaces, it must be ensured that the minimum spacing is maintained between the fan cover and the wall. This also applies to adjacent parts, such as large handwheels and flywheels on the second shaft extension.

Clearance from wall/fan grilles	
Frame size	mm
63, 71	15
80, 90, 100	20
112	25
132	30
160	40
180, 200	90
225, 250	100
280, 315	110

For design of the fan and the fan cover, see the table below.

Motor series	Frame size	Fan material	Fan cover material
1LE10	80 … 200	Plastic	Plastic [1]
1LE15	71 … 90	Plastic	Metal
	100 … 315	Plastic	Plastic
1LE16	100 ... 315	Plastic	Metal
1MB1.3	80, 90	Metal	Metal
1MB1.3	100 … 315	Plastic	Metal
1MB1.1, 1MB1.2	80 … 315	Metal	Metal

Metal external fan impeller

The standard fan impeller made of plastic can be replaced with a fan impeller made of metal. This version is available for motor series 1LE1 (with the exception of 1LE1 with option **F90** – version "Forced-air cooled motors without external fan and fan cover").
A metal external fan is already included for the low-noise version.
Up to frame size 160, the metal external fan impeller is manufactured from aluminum.
Order code **F76**

Fan cover for textile industry

For 1LE1 motors (with the exception of 1LE1 with option **F90** – version "Forced-air cooled motors without external fan and fan cover") the standard design of the fan cover cannot be used in the textile industry.
For the motor series 1LE1 (with the exception of 1LE1 with option **F90** – version "Forced-air cooled motors without external fan and fan cover") a special design of the fan cover is available for the textile industry. This has a protective cover and is made of non-corrosive sheet steel.

The motor length increases when the fan cover for the textile industry is mounted, see Page 1/92 Figure 12
Order code **F75**

Sheet metal fan cover

In place of the plastic fan cover, a sheet metal fan cover can be ordered for motor series 1LE1 (with the exception of 1LE1 with option **F90** – version "Forced-air cooled motors without external fan and fan cover").
Order code **F74**

The sheet metal fan cover is supplied as standard with 1LE16 motors (Performance Line).

[1] For type of construction codes **A**, **D**, **F**, **H**, **J**, **K**, **L**, **N**, **T**, **U**, **V**, a screw-mounted cover (plastic or metal sheet) is used in combination with option **H03** (condensation drainage holes). Mounted separately driven fans or brakes are only available in sheet metal design.

© Siemens AG 2015

Overview (continued)

Necessary minimum cooling air flow for forced-air cooled motors in standard duty

The cooling air flow specified in the selection table applies to continuous duty according to EN 60034-1 at a coolant temperature (CT) or ambient temperature of 40 °C respectively and an installation altitude (IA) up to 1000 m above sea level.

In the 1LE1 motor version without external fan and fan cover, order code **F90**, the motor is located in the air flow of the driven fan that must drive the minimum cooling air flow over the motor housing. The minimum air flow must pass closely over the housing (comparable to self-ventilation of the motor). Otherwise higher air flows are required to comply with admissible motor heating levels.

Frame size	Required cooling air flow for number of poles									
	2		4				6		8	
	IE2									
	50 Hz m^3/min	60 Hz m^3/min	50 Hz m^3/min		60 Hz m^3/min		50 Hz m^3/min	60 Hz m^3/min	50 Hz m^3/min	60 Hz m^3/min
71	1.49	1.81	0.75		0.87		0.49	0.58	0.36	0.43
80	1.82	2.18	0.9		1.1		0.6	0.73	0.44	0.53
90	3.3	4.03	1.64		2.01		1.11	1.31	0.76	0.94
	IE2/IE1		**IE2**		**IE1**		**IE2/IE1**		**IE2/IE1**	
	50 Hz m^3/min	60 Hz m^3/min	50 Hz m^3/min	60 Hz m^3/min	50 Hz m^3/min	60 Hz m^3/min	50 Hz m^3/min	60 Hz m^3/min	50 Hz m^3/min	60 Hz m^3/min
100	3.8	4.4	2.1	2.6	2.3	2.8	1.5	1.8	1.2	1.3
112	5.0/5.4 [1]	5.7/6.1 [1]	2.9	3.5	2.9	3.5	1.9	2.3	1.4	1.6
132	6.3	7.2	4.6	5.7	4.6	5.7	3.1	3.8	2.4	2.9
160	10.9	13.3	6.7	8.1	7.6	9.1	5	6.1	3.8	4.5
180	12.4	14.8	7.8	9.4	7.8	9.4	5.2	6.2	4.8	5.8
200	14.3	17.2	10.4	12.5	10.4	12.5	7.9	9.5	6	7.2
	IE2									
	50 Hz m^3/min	60 Hz m^3/min	50 Hz m^3/min		60 Hz m^3/min		50 Hz m^3/min	60 Hz m^3/min	50 Hz m^3/min	60 Hz m^3/min
225	22	26	19		23		15	17.5	11.5	13.5
250	28	33	21		24.5		19	22.5	14.5	16.3
280	32	37.5	32.5		39		24	29.5	18	22
315	48	58	49		58		34	40	25	30.5
	IE4/IE3									
	50 Hz m^3/min	60 Hz m^3/min	50 Hz m^3/min		60 Hz m^3/min		50 Hz m^3/min	60 Hz m^3/min	50 Hz m^3/min	60 Hz m^3/min
180	10.3	12.3	7		8.3		5.2	6.2	–	–
200	10.4	12.5	7.6		9.1		6.5	7.8	–	–
225	14	17.5	12		15		15.5	18	–	–
250	18.5	22	12		15		16	20	–	–
280	26	30.5	27.5		32.5		22.5	26.5	–	–
315	40	48.5	32.5		39		31	37	–	–
	IE3/IE2									
	50 Hz m^3/min	60 Hz m^3/min	50 Hz m^3/min		60 Hz m^3/min		50 Hz m^3/min	60 Hz m^3/min	50 Hz m^3/min	60 Hz m^3/min
80	1.36	1.66	0.66		0.8		0.42	0.51	0.3	0.38
90	2.86	3.41	1.34		1.7		0.87	1.06	0.65	0.8

[1] Value: IE2/IE1

© Siemens AG 2015

Overview

Standard types of construction and special types of construction

Type of construction acc. to EN 60034-7		Frame size	Letter 14th position of the Article No.	Add. identification code **–Z** with order code
Without flange				
IM B3/IM 1001		71 to 315	**A**	–
IM B6/IM 1051	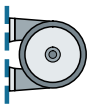	71 to 315	**T**	–
IM B7/IM 1061,	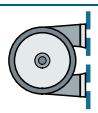	71 to 315	**U**	–
IM B8/IM 1071,		71 to 315	**V**	–
IM V5/IM1011 without protective cover	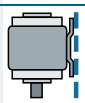	71 to 315	**C** [1]	–
IM V6/IM 1031	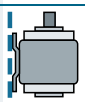	71 to 315	**D**	–
IM V5/IM 1011 with protective cover	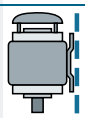	71 to 315	**C**	**+ H00** [2]
With flange				
IM B5/IM 3001	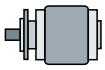	71 to 315	**F**	–
IM V1/IM 3011 without protective cover	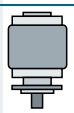	71 to 315	**G** [1]	–
IM V1/IM 3011 with protective cover	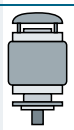	71 to 315	**G**	**+ H00** [2]
IM V3/IM 3031		71 to 315	**H**	–
IM B35/IM 2001	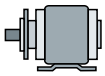	71 to 315	**J**	–

In the EN 50347 standard, flanges FF with through holes and flanges FT with tapped holes are specified.

[1] Ex The following applies for explosion-proof motors:
In the case of the types of construction with shaft extension down, the version "with protective cover" is required. For types of construction with shaft extension pointing upwards, a suitable cover must be implemented to prevent small parts from falling into the fan cover (see the standard IEC/EN 60079-0). The cover must not block the cooling air flow.

[2] Standard cylindrical shaft extension **L05** is not possible.

© Siemens AG 2015

Overview (continued)

Type of construction acc. to EN 60034-7	Frame size	Letter 14th position of the Article No.	Add. identification code **–Z** with order code
With standard flange			
IM B14/IM 3601 	80 to 315	**K**	**–**
IM V19/IM 3631 	80 to 315	**L**	**–**
IM V18/IM 3611 without protective cover 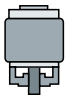	80 to 315	**M** [1]	**–**
IM V 18/IM 3611 with protective cover 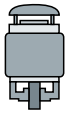	80 to 315	**M**	**+ H00** [2]
IM B34/IM 2101 	80 to 315	**N**	**–**
With special flange			
IM B14/IM 3601 	80 to 315	**K**	**+ P01**
IM B34/IM 2101 	80 to 315	**N**	**+ P01**
IM V18/IM 3611 without protective cover 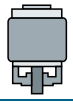	80 to 315	**M** [1]	**+ P01**
IM V 18/IM 3611 with protective cover 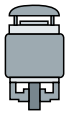	80 to 315	**M**	**+ P01** **+ H00** [2]
IM V19/IM 3631 	80 to 315	**L**	**+ P01**

In EN 50347, standard flanges are assigned to the frame sizes as FT with tapped holes. See the table on the next page for flange dimensions.

The dimensions of the following types of construction are identical:
IM B3, IM B6, IM B7, IM B8, IM V5 and IM V6
IM B5, IM V1 and IM V3
IM B14, IM V18 and IM V19

Motors in the standard power range can be ordered in basic types of construction IM B3, IM B5 or IM B14 and operated in mounting positions IM B6, IM B7, IM B8, IM V5, IM V6, IM V1, IM V3 (up to frame size 160 L) or IM V18 and IM V19.
Eyebolts are available for transport and installation in a horizontal position. In conjunction with the eyebolts, for the purpose of stabilizing the position when the motor is arranged vertically, additional lifting straps (EN 1492-1) and/or clamping bands (EN 12195-2) must be used.

When a motor for mounting position IM V1 is ordered directly, the motor is supplied with eyebolts for vertical mounting (up to frame size 90 and frame sizes 180 and 200 for aluminum motors without eyebolts).

The motors are designated in accordance with the types of construction on the rating plate.

With motors that have a vertical shaft extension, the end user must prevent an ingress of fluid along the shaft.
In the case of all types of construction with shaft end down, the version "with protective cover" is urgently recommended, see the section "Degrees of protection" on Page 1/45.

Housing design

Motors with feet have, in some cases, two fixing holes at the non-drive end (NDE), see dimension tables on Pages 2/92 to 2/122.

A screw-mounted cover (plastic sheet or metal sheet) is included as standard for horizontal types of construction and types of construction with shaft pointing upwards (14th position of article number letter **A**, **T**, **U**, **V**, **D**, **F**, **H**, **J**, **K**, **L**, **N**) on motors up to FS160 in combination with condensation drainage holes, order code **H03**.

[1] Ⓔx The following applies for explosion-proof motors:
In the case of the types of construction with shaft extension down, the version "with protective cover" is required. For types of construction with shaft extension pointing upwards, a suitable cover must be implemented to prevent small parts from falling into the fan cover (see the standard IEC/EN 60079-0). The cover must not block the cooling air flow.

[2] Standard cylindrical shaft extension **L05** is not possible.

© Siemens AG 2015

Overview (continued)

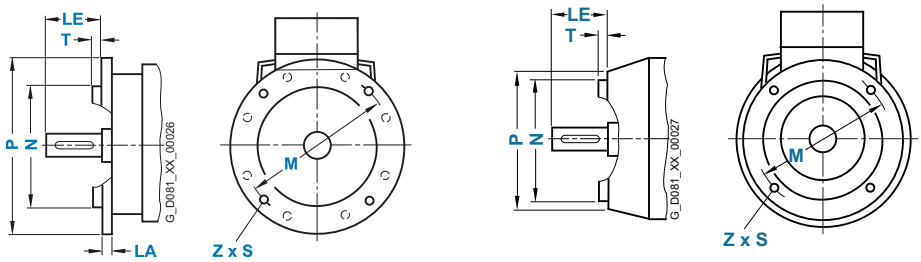

In EN 50347, the frame sizes are allocated flange FF with through holes and flange FT with tapped holes.
The designation of flange A and C according to DIN 42948 (invalid since September 2003) are also listed for information purposes. See the table below. (**Z** = the number of retaining holes)

Frame size	Type of construction	Flange type	Flange with through holes (**FF**/A) Flange with tapped holes (**FT**/C)		Dimension designation acc. to **IEC**							
			Acc. to EN 50347	Acc. to DIN 42948	**LA**	**LE**	**M**	**N**	**P**	**S**	**T**	**Z**
71 M	IM B5, IM B35, IM V1, IM V3	Standard flange	**FF130**	A 160	9	30	130	110	160	10	3.5	4
	IM B14, IM B34, IM V18, IM V19	Standard flange	**FT85**	C 105	–	30	85	70	105	M6	2.5	4
	IM B14, IM B34, IM V18, IM V19	Next larger standard flange – Order code **P01**	**FT115**	C 140	–	30	115	95	140	M8	3	4
80 M	IM B5, IM B35, IM V1, IM V3	Standard flange	**FF165**	A 200	10	40	165	130	200	12	3.5	4
	IM B14, IM B34, IM V18, IM V19	Standard flange	**FT100**	C 120	–	40	100	80	120	M6	3	4
	IM B14, IM B34, IM V18, IM V19	Next larger standard flange – Order code **P01**	**FT130**	C 160	–	40	130	110	160	M8	3.5	4
90 S/L	IM B5, IM B35, IM V1, IM V3	Standard flange	**FF165**	A 200	10	50	165	130	200	12	3.5	4
	IM B14, IM B34, IM V18, IM V19	Standard flange	**FT115**	C 140	–	50	115	95	140	M8	3	4
	IM B14, IM B34, IM V18, IM V19	Next larger standard flange – Order code **P01**	**FT130**	C 160	–	50	130	110	160	M8	3.5	4
100 L	IM B5, IM B35, IM V1, IM V3	Standard flange	**FF215**	A 250	11	60	215	180	250	14.5	4	4
	IM B5, IM B35, IM V1, IM V3	Next larger standard flange – Order code **P01**	**FF265**	A 300	12	60	265	230	300	14.5	4	4
	IM B5, IM B35, IM V1, IM V3	Next smaller standard flange – Order code **P02**	**FF165**	A 200	11	60	165	130	200	12	3.5	4
	IM B14, IM B34, IM V18, IM V19	Standard flange	**FT130**	C 160	–	60	130	110	160	M8	3.5	4
	IM B14, IM B34, IM V18, IM V19	Next larger standard flange – Order code **P01**	**FT165**	C 200	–	60	165	130	200	M10	3.5	4
112 M	IM B5, IM B35, IM V1, IM V3	Standard flange	**FF215**	A 250	11	60	215	180	250	14.5	4	4
	IM B5, IM B35, IM V1, IM V3	Next larger standard flange – Order code **P01**	**FF265**	A 300	12	60	265	230	300	14.5	4	4
	IM B5, IM B35, IM V1, IM V3	Next smaller standard flange – Order code **P02**	**FF165**	A 200	11	60	165	130	200	12	3.5	4
	IM B14, IM B34, IM V18, IM V19	Standard flange	**FT130**	C 160	–	60	130	110	160	M8	3.5	4
	IM B14, IM B34, IM V18, IM V19	Next larger standard flange – Order code **P01**	**FT165**	C 200	–	60	165	130	200	M10	3.5	4
132 S/M	IM B5, IM B35, IM V1, IM V3	Standard flange	**FF265**	A 300	12	80	265	230	300	14.5	4	4
	IM B5, IM B35, IM V1, IM V3	Next larger standard flange – Order code **P01**	**FF300**	A 350	13	80	300	250	350	18.5	5	4
	IM B5, IM B35, IM V1, IM V3	Next smaller standard flange – Order code **P02**	**FF215**	A 250	11	80	215	180	250	14.5	4	4
	IM B14, IM B34, IM V18, IM V19	Standard flange	**FT165**	C 200	–	80	165	130	200	M10	3.5	4
	IM B14, IM B34, IM V18, IM V19	Next larger standard flange – Order code **P01**	**FT215**	C 250	–	80	215	180	250	M12	4	4
160 M/L	IM B5, IM B35, IM V1, IM V3	Standard flange	**FF300**	A 350	13	110	300	250	350	18.5	5	4
	IM B5, IM B35, IM V1, IM V3	Next smaller standard flange – Order code **P02**	**FF265**	A 300	12	110	265	230	300	14.5	4	4
	IM B14, IM B34, IM V18, IM V19	Standard flange	**FT215**	C 250	–	110	215	180	250	M12	4	4
180 M/L	IM B5, IM B35, IM V1, IM V3	Standard flange	**FF300**	A 350	13	110	300	250	350	18.5	5	4
	IM B5, IM B35, IM V1, IM V3	Next smaller standard flange – Order code **P02**	**FF 265**	A 300	12	110	265	230	300	14.5	4	4
200 L	IM B5, IM B35, IM V1, IM V3	Standard flange	**FF350**	A 400	15	110	350	300	400	18.5	5	4
	IM B5, IM B35, IM V1, IM V3	Next smaller standard flange – Order code **P02**	**FF300**	A 350	13	110	300	250	350	18.5	5	4
225 S/M 2-pole 4- ... 8-pole	IM B5, IM B35, IM V1, IM V3	Standard flange	**FF400**	A 450	16	110 140	400	350	450	18.5	5	8
250 M	IM B5, IM B35, IM V1, IM V3	Standard flange	**FF500**	A 550	18	140	500	450	550	18.5	5	8
280 S/M	IM B5, IM B35, IM V1, IM V3	Standard flange	**FF500**	A 550	18	140	500	450	550	18.5	5	8
315 S/M/L 2-pole 4- ... 8-pole	IM B5, IM B35, IM V1, IM V3	Standard flange	**FF600**	A 660	22	140 170	600	550	660	24	6	8

© Siemens AG 2015

Overview

Connection, circuit, and terminal boxes

Location of the terminal box

The terminal box of the motor can be mounted in four different locations or positions.
The position of the terminal box is coded using the 16th position of the motor article number.
When defining the position of the terminal box, please observe the following:

- Motors with feet must always be viewed looking onto the drive end with the shaft in the horizontal position. The feet are then always at "6 o'clock". This is especially important with construction types IM B6, IM B7 and IM B8 and also applies to combined construction types such as IM B35.
- Flange-mounting motors (e.g. IM B5) whose drive-end flange has a condensation drainage hole must always be viewed looking onto the drive end with the shaft in the horizontal position. The condensation drainage hole is then always at "6 o'clock".

The aluminum series motors 1LE10 and 1PC10 with feet and standard power range have cast feet in the standard version in frame sizes up to 160, e.g. IM B3, IM B6 etc. (applies only to IE3 motors with standard housing; IE3 motors with long housing always have bolted-on feet). Motors from frame size 180 upwards have bolted-on feet. If rotation of the terminal box is to be possible in the future, then the "Screwed-on feet" option, order code **H01**, must be ordered.
In accordance with the type of construction, spare holes that are not used for mounting the feet can be used by the customer. If the customer would like this option, it is advisable to include order code **H10** "Housing with screw mounting" in the order – possible only for frame sizes 80, 90, 180 and 200. Responsibility for any strength calculations required for equipment mounted by the customer lies with the customer.

For all motors with increased output (non-standard output) and with feet, the feet are screw-mounted as standard. The terminal box can be rotated later. Motors with frame sizes 225 to 315 are supplied as standard with cast feet.

Terminal box on RHS
16th position of Article No. digit **5**.

Terminal box on LHS
16th position of Article No. digit **6**.

Terminal box at bottom
16th position of Article No. digit **7**.

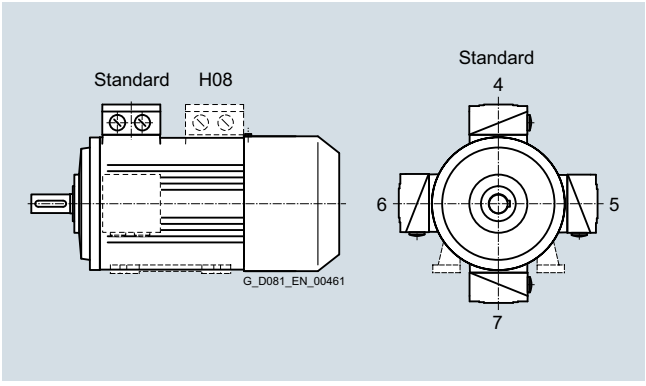

Location of the terminal box with the corresponding digits in the 16th position of the article number.

The number of winding ends depends on the winding design. Three-phase motors are connected to the three phase conductors L1, L2 and L3 of a three-phase system. The rated voltage of the motor in the running connection must match the phase conductor voltages of the network.

When the three phases are operating in a time sequence and are connected to the terminals of the motor in alphabetical order U1, V1 and W1, clockwise rotation of the motor shaft is established as viewed onto the drive end. The direction of rotation of the motor can be changed to counterclockwise if two connecting leads are interchanged.

Labeled terminals are provided to connect the protective conductor.
A PE terminal is provided in the terminal box for grounding. A grounding terminal is provided on the outside of the motor frame – special version for 1LE1/1PC1 motors.
Order code **H04**

External grounding terminal/external grounding is standard for 1LE15/16 motors from frame size 180 upwards.

A second external grounding connection can also be ordered.
Order code **H70** (must be ordered in combination with option **H04**)

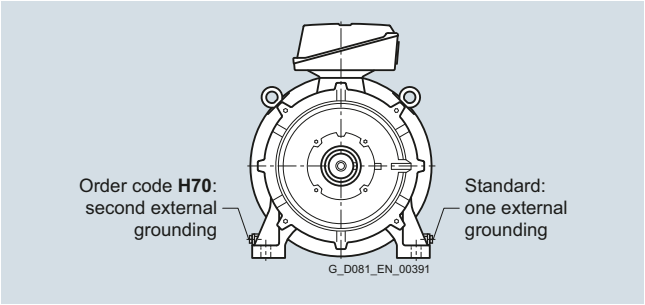

If a brake control system or thermal protection is installed, the connections will also be in the terminal box. The motors are suitable for direct connection to the line supply.

Design of the terminal box

The number of terminals and the size of the terminal box are designed for standard requirements.

For special requirements, or on customer request, a larger terminal box can be supplied.

For motors with frame sizes 71 up to 90, the following constraints apply:

When the terminal box is located on the left or right-hand sides, the customer must not align the cable entry towards the housing feet, because this can cause collisions between the motor connection cables and the foundations.

Larger terminal box
Order code **R50**

If the necessary installation angle of the motor would cause machine components to collide with the terminal box, the terminal box can be moved from the drive end (DE) to the non-drive end (NDE). Only use according to temperature class 155 (F). When the terminal box is rotated to the non-drive end of the motor, it is important to note that dimensions "C" and "CA" will not comply with the values specified by EN 50347. Dimension drawings can be requested via DT Configurator.
Order code **H08**

© Siemens AG 2015

Overview (continued)

Motor connection

Line feeder cables
The line feeder cables must be dimensioned acc. to DIN VDE 0298. The number of required feeder cables, if necessary in parallel, is defined by:

- The max. cable cross-section which can be connected
- The cable type
- Cable routing
- Ambient temperature and the corresponding admissible current in accordance with DIN VDE 0298

For motors with auxiliary terminals (e.g. 15th position of Article No. is letter **B**), additional cable entry holes are provided (M16 × 1.5 or M20 × 1.5 depending on frame size).
For further details, see the data sheet function in the DT Configurator.

The terminal box is located on the housing and bolted in place. The terminal box can be turned 4 × 90° degrees on the terminal base of the machine's housing in the case of a terminal board with 6 terminal studs (standard design). Motors from the 1LE10 series in frame sizes 80 and 90 might be fitted with a terminal box that can be rotated through 360° in some cases depending on the technical design and/or on ordering options.

These motors have a terminal board with 3 terminals.

Terminal boxes that can be rotated through 360° cannot be ordered by order code, but are installed at the factory depending on the technical features of the motor.

For further information, see tables below and the operating instructions.

Parallel feeders
Some motors must be fitted with parallel feeders due to the maximum permissible current per terminal. These motors are indicated in the selection and ordering data in the respective chapter.

Cable entry on terminal box

With a view onto the the drive end of the motor with the shaft in the horizontal position and the terminal box on the top, the cable entry is always on the right-hand side of the motor, as shown in the figure below. Standard position 0°, (smoke-extraction motors, order code **R13**). The terminal box can be rotated on the base of the motor housing such that the cable entry is located in the positions given below:

- Towards the drive end (DE)
  (rotation of terminal box by 90°,
  entry from DE) not possible for B5 construction types.
  With B14 construction types, the customer must ensure that sufficient space is available for cable outlet.
  Order code **R10**
- Towards the fan end (NDE)
  (rotation of terminal box by 90°,
  entry from NDE)
  Order code **R11**
- Opposite the standard position 0°
  (rotation of terminal box by 180°,
  entry opposite the standard position 0°)
  Order code **R12**

The dimensions of the terminal box are listed in the section "Dimensions" on Pages 2/92 to 2/122 in accordance with the frame size and the "Dimensional drawings".
If the position of the terminal box (RHS, LHS or top) is changed, the position of the cable entry must be checked and, if necessary, ordered with the corresponding order codes (**R10**, **R11** and **R12**).

Location of the cable entries with corresponding order codes

Motor	Frame size	Terminal box	Terminal box position				Rotation of the terminal box and cable entry				
			Top	Right-hand side	Left-hand side	Retrofitting possible	Continuously by 360°	-90°	+90°	180°	Retrofitting possible
			16th position of Article No. and with specification of order code, Article No. with **-Z**					Article No. with **-Z** and order code			
Type		Type	**4**	**5**	**6**	**4**					
			Order code								
						H01		**R10**	**R11**	**R12**	
1LE10, 1MB10, 1PC10	80 … 90	TB1D00, TB1D10	✔	✔	✔	– [1]	✔	✔	✔	✔	Yes
		TB1E00, TB1E10	✔	✔	✔	– [1]	–	✔	✔	✔	Yes
	100, 112	TB1F00, TB1F10	✔	✔	✔	– [1]	–	✔	✔	✔	Yes
	132	TB1H00, TB1H10	✔	✔	✔	– [1]	–	✔	✔	✔	Yes
	160, 180	TB1J00, TB1J10	✔	✔	✔	– [1]	–	✔	✔	✔	Yes
	200	TB1L00, TB1L10	✔	✔	✔	– [1]	–	✔	✔	✔	Yes
1LE15	71	TB1D01	✔	✔	✔	–	–	✔	✔	✔	Yes
	80, 90	TB1D01	✔	✔	✔	–	–	✔	✔	✔	Yes
1LE15, 1LE16, 1MB15, 1MB16	100 … 315	TB1F01 … TB1R01	✔	✔	✔	–	–	✔	✔	✔	Yes

[1] Not applicable for smoke-extraction motors.

© Siemens AG 2015

Overview (continued)



Terminal box in standard position, detailed view

Ordering example:

Terminal box on RHS (16th position of Article No. digit **5**):

Cable entry is from below unless another order code is specified.

Cable entry from drive end (DE) – Article No. with **-Z** and order code **R10**.

For cable entry to a standard terminal box, a metal cable gland can be ordered for motor connection.
One metal cable gland – Article No. with **-Z** and order code **R15**.

For special requirements for which standard holes for the cable entries are inadequate for the UK market, reduction pieces for M cable glands in accordance with British Standard that are mounted on both cable entries can be supplied (only up to frame size 160).
Order code **R30**

Frame size	Cable entry acc. to	
	IEC	British Standard
100	2 × M32	2 × M20
112/132	2 × M32	2 × M25
160	2 × M40	2 × M32

Motor connectors

Motors of frame sizes 80 to 132 can be supplied with a motor connector.
The motor connectors are mounted on the specially designed terminal box at the factory and are aligned towards NDE in the basic version. The terminal boxes can be rotated by 4 × 90° on the base of the motor housing.

The following motor connector variants are available:

- Motor connector HAN10B-10E
  Order code **R70**
- Motor connector HAN10B-10E EMC
  Order code **R71**
- Motor connector HAN3A-Q12 EMC
  Order code **R72**
- Motor connector HAN3A-Q12
  Order code **R73**

Motor connector assignment

Motor Type	Frame size	Motor connectors Type	Size of the terminal box
1LE10	80 … 90	HAN3A-Q12 HAN3A-Q12 EMC	TB1E00 with mounted brake TB1E10
	80 … 90	HAN10B-10E HAN10B-10E EMC	Only possible with TB1E10
1LE10, 1PC10	100 … 132	HAN10B-10E HAN10B-10E EMC	Currently only available with TB1F10 (frame sizes 100 and 112) or TB1H10 (frame size 132)

Technical characteristic values of motor connectors according to EN 60664-1 and EN 61984

Characteristic value	Motor connector			
	HAN3A-Q12		**HAN10B-10E**	
	Degree of pollution			
	3	2	3	2
Rated current	10 A		16 A	
Rated voltage	400 V	400/690 V	500 V	400/690 V
Rated voltage according to UL/CSA	600 V		600 V	

For further technical specifications of the motor connectors, refer to the catalog of Harting Deutschland GmbH & Co. at www.harting.com
or
https://b2b.harting.com/ebusiness/en/industrial-connectors-han/1100382

Protruding cable ends

For confined spaces, protruding cable ends can be ordered, without a terminal box with cover plate.

The following lengths of protruding cables can be ordered as standard using order codes:

- 3 cables protruding, 0.5 m long [1)]
  Order code **R20**
- 3 cables protruding, 1.5 m long [1)]
  Order code **R21**
- 6 cables protruding, 0.5 m long
  Order code **R22**
- 6 cables protruding, 1.5 m long
  Order code **R23**
- 6 cables protruding, 3.0 m long
  Order code **R24**

The cross-section of the named cable refers to a coolant temperature of up to CT 40 °C.

[1)] For 3 protruding cables only, it must be specified in plain text whether star or delta connection is required (voltage code **90** and **M1Y**).

© Siemens AG 2015

Overview (continued)

Terminal box type TB1D00



Terminal box type TB1D10 – order code **R50**



Terminal box type TB1E00



Terminal box type TB1E10 – order code **R50**



Terminal box types TB1F00, TB1H00, TB1J00



Terminal box types TB1F10, TB1H10, TB1J10 – Order code **R50**

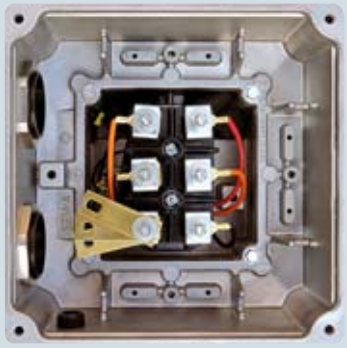

Terminal box TB1L00



Terminal box TB1L10 – order code **R50**



© Siemens AG 2015

Overview (continued)

Terminal box type TB1J01



Terminal box type TB1L01



Terminal box type TB1N01



Terminal box type TB1Q01



Motor connector HAN3A-Q12

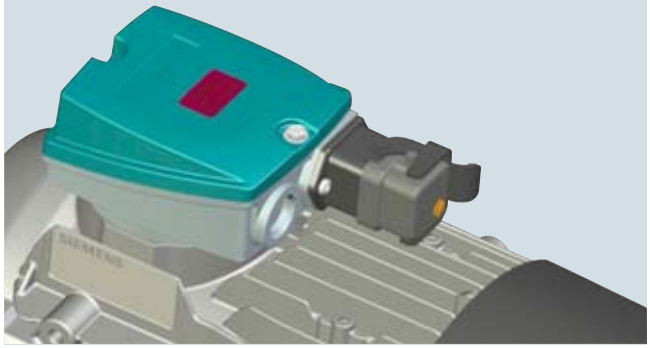

Motor connector HAN10B-10E

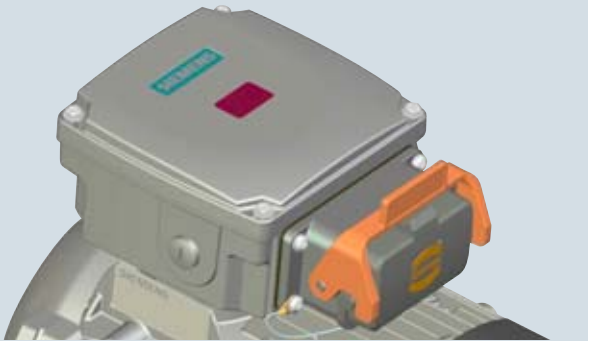

© Siemens AG 2015

Overview (continued)

Basic data for terminal boxes for 1LE1, 1MB1 and 1PC1 motors

Motor	Frame size	Terminal box	Cable entries/locking	Terminal box material	Feeder connection
1LE10/1MB10/1PC10					
1LE10/ 1PC1	80 … 90	TB1D00	1 entry complete with sealing plug, thread in terminal box (2 entries with additional mounting components in the winding) Locking with snap-on connection and central terminal box screw	Aluminum alloy	• Cable lug • Rigid cable, no cable lug • Multicore cable with end sleeve
1LE10	80 … 90	TB1D10	2 entries complete with sealing plugs, thread in terminal box Locking with snap-on connection and central terminal box screw	Aluminum alloy	• Cable lug • Rigid cable, no cable lug • Multicore cable with end sleeve
1LE10	80 … 90	TB1E00	1 entry complete with sealing plugs, thread in terminal box, (2 entries with additional mounting components in the winding) Terminal box mounted and screwed	Aluminum alloy	• Cable lug • Rigid cable, no cable lug
1LE10/ 1MB10	80 … 90	TB1E10	2 entries complete with sealing plugs, thread in terminal box, terminal box mounted and screwed in place	Aluminum alloy	• Cable lug • Rigid cable, no cable lug
1LE10 1MB10 [1] 1PC10	100 … 180 80 ... 160 100 … 160	TB1F00 TB1H00 TB1J00 TB1F10 TB1H10 TB1J10	2 entries complete with sealing plugs and locknuts Terminal box mounted and screwed in place	Aluminum alloy	• Cable lug • Rigid cable, no cable lug
1LE10	200	TB1L00 TB1L10	2 entries complete with sealing plugs, thread in terminal box, terminal box mounted and screwed in place	Aluminum alloy	• Cable lug • Rigid cable, no cable lug
1LE15/1LE16/1MB15/1MB16					
1LE15	71 … 90	TB1D01	2 entries complete with sealing plugs, thread in terminal box, terminal box mounted and screwed in place	Cast iron	• Cable lug • Rigid cable, no cable lug
1LE15/ 1LE16/ 1MB15/ 1MB16	100 … 315	TB1F01 … TB1R01	2 entries complete with sealing plugs, thread in terminal box, terminal box mounted and screwed in place	Cast iron	• Cable lug • Rigid cable, no cable lug

[1] The certified cable entries are supplied as standard for explosion-proof motors.
- Frame sizes 80 to 200: One certified metric cable gland and one certified metric sealing plug
- Frame sizes 225 to 315: Two certified metric cable glands

© Siemens AG 2015

Overview (continued)

Technical specifications for terminal boxes for 1LE1, 1MB1 and 1PC1 motors

Frame size	Terminal box [1] Standard / larger	Number of terminals	Contact screw thread	Max. connectable cross-section mm^2	Outer cable diameter (sealing range) mm	Cable entry [2]	Cable entry for CSA version, order code **D40** [3] mm
1LE10/1MB10/1PC1							
80 and 90 [4]	TB1D00/TB1D10	3	M3.5	1.5/2.5 with cable lug	M16 × 1.5: 4.5 ... 10; M25 × 1.5: 9 ... 17	1 × M25 × 1.5/ 1 × M16 × 1.5 + 1 × M25 × 1.5	–
80 and 90	TB1E00/TB1E10	6	M4	1.5/2.5 with cable lug	M16 × 1.5: 4.5 ... 10; M25 × 1.5: 9 ... 17	1 × M25 × 1.5/ 1 × M16 × 1.5 + 1 × M25 × 1.5	–
100	TB1F00/TB1F10	6	M4	4	11 … 21	2 × M32 × 1.5	NPT 3/4"
112							
132	TB1H00/TB1H10	6	M4	6	11 … 21	2 × M32 × 1.5	NPT 3/4"
160	TB1J00/TB1J10	6	M5	16	19 … 28	2 × M40 × 1.5	NPT 1"
180							M40 × 1.5 [5]
200	TB1L00/TB1L10	6	M6	25	27 ... 35	2 × M50 × 1.5	M50 × 1.5 [5]
1LE15							
71 ... 90	TB1D01	6	M4	1.5/2.5 with cable lug	M16 × 1.5: 4.5 ... 10 M25 × 1.5: 9 ... 17	1 x M16 × 1.5 + 1 × M25 × 1.5	–
1LE15/1LE16/1MB15/1MB16							
100	TB1F01/TB1J01	6	M4	4	11 … 21	2 × M32 × 1.5	M50 × 1.5 [5]
112							M63 × 1.5 [5]
132	TB1H01/TB1J01	6	M4	6	11 … 21	2 × M32 × 1.5	M63 × 1.5 [5]
160	TB1J01/TB1K01	6	M5	16	19 … 28/ 27 … 35	2 × M40 × 1.5/ 2 × M50 × 1.5	
180	TB1J01/TB1K01	6	M5/M6	16/25	19 … 28/ 27 … 35	M40 × 1.5/ M50 × 1.5	M63 × 1.5 [5]
200	TB1L01/TB1L01	6	M6/M8	25/35	27 … 35/ 27 … 35	2 × M50 × 1.5/ 2 × M50 × 1.5	M50 × 1.5 [5]
225	TB1L01/TB1N01	6	M8/M10	35/120	27 … 35/ 34 … 42	2 × M50 × 1.5/ 2 × M63 × 1.5	M63 × 1.5 [5]
250	TB1N01/TB1Q01	6	M10/M12	120/240	34 … 42/ 38 … 45	2 × M63 × 1.5/ 2 × M63 × 1.5	M63 × 1.5 [5]
280							
315	TB1Q01/TB1R01	6	M12/M16	240/400	38 … 45/ 44 … 54	2 × M63 × 1.5/ 2 × M63 × 1.5	M63 × 1.5 [5]

– Not available

Terminal connection

The terminal board accommodates the terminals that are connected to the leads to the motor windings. The terminals are designed so that for frame sizes 71 to 315, the external (line) connections can be made without the need for cable lugs.

[1] In addition to the exact part designation, please specify the machine type and the serial number in all orders for spare parts and repair parts.

[2] Designed for cable glands with O-ring.

[3] Not possible for motors in Zone 22.

[4] Only applicable to motors from Bad Neustadt.

[5] NPT threads can be ordered with order code **Y61**.

© Siemens AG 2015

Overview (continued)

Maximum number of auxiliary terminal boxes for main terminal box

Maximum number of TB2J01 auxiliary terminal boxes (Order code **R62**) **in combination with standard terminal box**

		Frame size								
		100, 112	132	160	180	200	225	250	280	315
		Terminal box								
Auxiliary terminal box		Type								
Type	Order code	TB1F01	TB1H01	TB1J01		TB1L01		TB1N01		TB1Q01
TB2J01	**R62**	–	–	2		2		2		2

Maximum number of TB2J01 auxiliary terminal boxes (Order code **R62**) **in combination with large terminal box** (Order code **R50**)

		Frame size								
		100, 112	132	160	180	200	225	250	280	315
		Terminal box								
Auxiliary terminal box		Type								
Type	Order code	TB1J01		TB1K01		TB1L01	TB1N01	TB1Q01		TB1R01
TB2J01	**R62**	–	–	2		2	2	2		2 (3, 4 on request)

Maximum number of TB2J01 auxiliary terminal boxes (Order code **R62**) **in combination with universal terminal box** (Order code **R52** or **R53**)

		Frame size							
		100 … 160	180	200	225	250	280	315	
		Terminal box							
Auxiliary terminal box		Type							
Type	Order code		TB1J61	TB1L61		TB1N61		TB1Q61	
TB2J01	**R62**	Not available	2	2		2 (3, 4 on request)		2 (3, 4 on request)	

Position of auxiliary terminal box in relation to position of TB1J01, TB1L01, TB1N01, TB1Q01, TB1K01 main terminal box

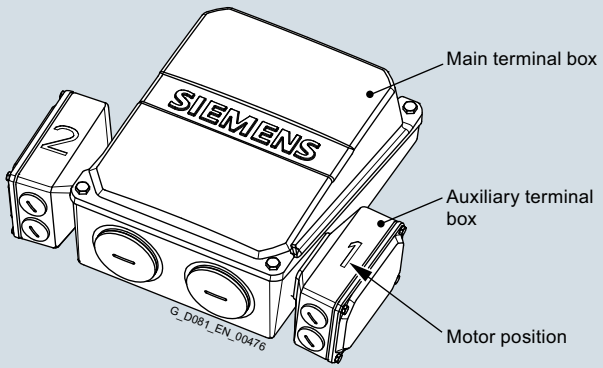

TB2J01 auxiliary terminal box (Order code **R62**) **in combination with TB1J01, TB1L01, TB1N01, TB1Q01, TB1K01 main terminal box**

	Position of the main terminal box											
	Top				Right-hand side				Left-hand side			
	16th Position of Article No. and when ordering with order code, Article No. with **-Z**											
	4				**5**				**6**			
	Rotation of terminal box											
	0° (Standard)	90°, entry from DE	90°, entry from NDE	180°	0° (Standard)	90°, entry from DE	90°, entry from NDE	180°	0° (Standard)	90°, entry from DE	90°, entry from NDE	180°
	Order code											
Number of auxiliary terminal boxes	–	**R10**	**R11**	**R12**	–	**R10**	**R11**	**R12**	–	**R10**	**R11**	**R12**
	Positions of auxiliary terminal boxes – see Figure											
1	1	1	1	2	1	2	1	2	2	1	2	1
2	1 + 2	1 + 2	1 + 2	1 + 2	1 + 2	–	–	1 + 2	1 + 2	–	–	1 + 2

© Siemens AG 2015

Overview (continued)

Position of auxiliary terminal box in relation to position of TB1R01, TB1J61, TB1L61, TB1N61, TB1Q61 main terminal box

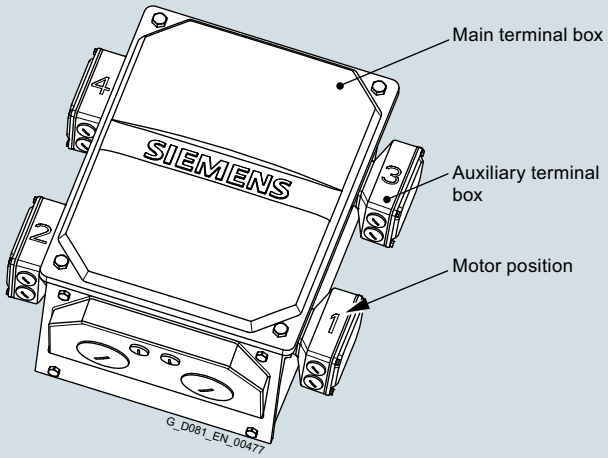

TB2J01 auxiliary terminal box (Order code **R62**) **in combination with TB1R01, TB1J61, TB1L61, TB1N61, TB1Q61 main terminal box**

	Position of the main terminal box											
	Top				Right-hand side				Left-hand side			
	16th position of Article No. and when ordering with order code, Article No. with **-Z**											
	4				**5**				**6**			
	Rotation of terminal box											
	0° (Standard)	90°, entry from DE	90°, entry from NDE	180°	0° (Standard)	90°, entry from DE	90°, entry from NDE	180°	0° (Standard)	90°, entry from DE	90°, entry from NDE	180°
	Order code											
Number of auxiliary terminal boxes	–	**R10**	**R11**	**R12**	–	**R10**	**R11**	**R12**	–	**R10**	**R11**	**R12**
	Positions of auxiliary terminal boxes – see Figure											
1	1	1	1	2	1	2	1	2	2	1	2	1
2	1 + 3	1 + 3	1 + 3	2 + 4	1 + 3	2 + 4	1 + 3	2 + 4	2 + 4	1 + 3	2 + 4	1 + 3
(3 on requ.)	1 + 2 + 3	1 + 2 + 3	1 + 2 + 3	1 + 2 + 4	1 + 2 + 3	–	–	1 + 2 + 4	1 + 2 + 4	–	–	1 + 2 + 3
(4 on requ.)	1 + 2 + 3 + 4	1 + 2 + 3 + 4	1 + 2 + 3 + 4	1 + 2 + 3 + 4	1 + 2 + 3 + 4	–	–	1 + 2 + 3 + 4	1 + 2 + 3 + 4	–	–	1 + 2 + 3 + 4

© Siemens AG 2015

Overview

Preparation for gear mounting

The flange-mounting motors can be equipped with a radial sealing ring in order to mount gearing.
Order code **H23**.

It must be ensured that the sealing ring is lubricated using grease, oil mist or oil spray (it is not admissible to use pressurized oil > 0.1 bar). We recommend that the admissible bearing loads are carefully checked.

Eyebolts and transport

1LE10, 1MB10 and 1PC10 motors without feet have four cast eyebolts as standard, each offset by 90°; in the case of screwed-on feet, two eyebolts are covered by the feet, so in this case only two eyebolts are available for use. This data is only valid up to frame size 200.

Housing material

Motor series	Frame size	Housing material	Frame feet
1LE10, 1PC1 [2]	80 … 160	Aluminum alloy	Cast [1]
	180 … 200	Aluminum alloy	Screwed on [1]
1MB10	100 … 160	Aluminum alloy	Cast [1]
1LE15/6, 1PC1301 [3]	71 … 315	Cast iron	Cast [1]
1MB15/6	100 … 315	Cast iron	Cast [1]

Preparation for mountings

Brakes as well as rotary encoders of the "modular and special technology" can be retrofitted. The motor must be prepared for this. This is possible for all 1LE1 motors (with the exception of 1LE1 with option **F90** – version "Forced-air cooled motors without external fan and fan cover").

Preparation of the shaft extension at NDE can be ordered with the option "Prepared for mountings, only center hole", order code **G40** for the following frame sizes and mountings:

- Frame sizes 80 to 315: brakes with order code **F01**
- Frame sizes 71 and 90: only rotary encoders with order code **G01** or **G02** from the "modular technology"
- Frame sizes 100 to 315: all rotary encoders of the "modular and special technology"

Dimensions of center holes

Frame size	Ø	L (drilling depth)
100	16^{H7}	34
112	16^{H7}	34
132	22^{H8}	39
160	28^{H8}	42

The length of the motor does not change because the shaft extension is still under the fan cover.

For motors ordered with order code **G40**, the following conversion combinations are possible:

- Frame sizes 71 and 90:
  Either brakes with order code **F01** or rotary encoders with order code **G01** or **G02** from the "modular technology". The combination of brake (**F01**) and rotary encoder (G01/G02) is not possible.
- Frame sizes 100 to 315:
  Brakes with order code **F01** or rotary encoders from the "modular and special technology". The combination of brake (**F01**) and rotary encoder is possible.

Conversion is performed exclusively by the authorized contractual partners of Siemens.

For motors of series 1LE15 and 1LE16 frame sizes 100 to 315, grounding brushes are available for converter operation.
Order code **L52**. Please contact your local Siemens office for advice.

For mountings, such as rotary encoders, supplied by the customer, the following applies:

For the encoders:

- 1XP8012-10, order code **G01**
- 1XP8012-20, order code **G02**

from the "modular technology" this preparation of the shaft extension on NDE can be ordered with the option "Prepared for mounting with shaft **D12**".
Order code **G41**
When a rotary pulse encoder is mounted, the length of the motor increases by Δl due to option **G41**. For an explanation of the additional dimensions and weights, see "Modular technology" "Dimensions and weights".

For the encoders:

- LL 861 900 220, order code **G04**
- HOG 9 D 1024 I, order code **G05**
- HOG 10 D 1024 I, order code **G06**

from the "special technology" this preparation of the shaft extension on NDE can be ordered with the option "Prepared for mounting with shaft **D16**" for motors of frame sizes 100 to 160 only.
Order code **G42**
When a rotary pulse encoder is mounted, the length of the motor increases by Δl due to option **G42**. For an explanation of the additional dimensions and weights, see "Modular technology" "Dimensions and weights".

Motors that are prepared for mountings supplied by the customer (order codes **G41**, **G42**) are supplied without a protective cover as standard. These mountings can be installed by the customer.

If a protective cover is requested as a cover or mechanical protection for mountings provided by the customer, this can be ordered with order code **G43**.
This protective cover is designed and mounted differently as described below according to frame size:

Frame sizes 71 to 90 and 180 to 200:
Motors ordered with order code **G43** are fitted as standard with a screw-mounted cover (made of sheet metal or plastic depending on shaft height). The protective cover is mounted in the factory. To install the mountings supplied by the customer, the protective cover must be removed beforehand by unscrewing the external fixing screws and reattached afterwards. Protective covers for motors of these frame sizes are not suitable for mountings that correspond to the shape and size of the rotary encoders of the "special technology" (**G04**, **G05**, **G06**, see above).

Frame sizes 100 to 315:
The protective cover must be installed by the customer in accordance with the assembly instructions supplied. It has supports of varying length that can be used for installation according to the height of the planned mountings.

The standard protective cover (order code **H00**) is not suitable for protection of additional mountings, such as rotary encoders.

Order codes **G40**, **G41**, **G42** may only be used in conjunction with order code **L00** vibration quantity level B.

Order code **G43** is only appropriate in combination with order codes **G41** and **G42**, and not in combination with **G40**.

[1] Basic version, cast feet: special version "Screwed-on feet (instead of cast)" with digits **5**, **6**, and **7** in the 16th position of Article No. or digit **4** with order code **H01**. Screwed-on feet as standard for 1LE10 motors in frame sizes 180 and 200 and motors with increased output.

[2] Aluminum motors in frame sizes 80 and 90 and 1PC10 motors in frame sizes 100 to 160 without eyebolts. Aluminum motors in frame sizes 100 to 200 with cast eyebolts (does not apply to 1PC10 and 1MB10 motors in frame sizes 180 and 200).

[3] 1LE16 motors frame size 100 and above, 1PC1301 motors frame size 180.

© Siemens AG 2015

Overview (continued)

Degrees of protection

All motors are designed to IP55 degree of protection. They can be installed in dusty or humid environments. The motors are suitable for operation in tropical climates. Guide value < 60 % relative air humidity at CT 40 °C. Other requirements are available on request (see table on Page 1/29).

Brief explanation of the degree of protection

IP54:
- Protection against harmful dust deposits
- Protection against water spray

IP55:
- Protection against harmful dust deposits
- Protection against water jets from any direction

IP56:
- Protection against harmful dust deposits
- Protection against water jets from any direction

Order code **H22**
Note that submersion by waves or total immersion, even temporarily, is not permitted especially in the case of motors with fans. This corresponds to IP67 or IP68 degree of protection (please inquire).
EN 60034-5 defines protection level 6 for water protection as: "Protection against water due to heavy seas or water in a powerful jet". IP56 degree of protection can only be used with the requirement "Protection against a powerful jet" and not for the requirement "Protection against heavy sea".
Not possible in combination with brake 2LM8 (order code **F01**).

IP65:
- Complete protection against dust deposits
- Protection against water jets from any direction

Order code **H20**
The code 6 for protection against the ingress of foreign bodies and touch hazard protection for electrical machines is not listed in EN 60034-5 – data for code 6 (protection against the ingress of dust) is given in EN 60529.
Not possible in combination with rotary pulse encoder HOG 9 D 1024I (order code **G05**) and/or brake 2LM8 (order code **F01**) and/or unpainted, cast-iron parts primed (order code **S00**).

EN 60529 contains a comprehensive description of this degree of protection as well as test conditions.

With motors that have a vertical shaft extension, the end user must prevent an ingress of fluid along the shaft.

For motors with shaft extension pointing downwards, the version "Protective cover for types of protection" order code **H00** is urgently recommended, see also the explanations on "Types of construction" on Page 1/32.

With flange-mounting motors, for IM V3 type of construction, collection of fluid in the flange basin can be prevented by drainage holes (on request).

The condensation drainage holes at the drive end (DE) and non-drive end (NDE) are sealed (IP55) on delivery. If the condensation drainage holes are ordered for motors of the IM B6, IM B7 or IM B8 type of construction (feet located on side or top), the position of the drainage holes will be in the correct position for the type of construction.
Order code **H03**

Note:
Motors of the Loher-CHEMSTAR series can be designed in IP66, see Catalog D 83.1.

A screw-mounted cover (made of sheet metal or plastic depending on shaft height) is included as standard for horizontal types of construction and types of construction with shaft pointing upwards (14th position of article number letter **A**, **T**, **U**, **V**, **D**, **F**, **H**, **J**, **K**, **L**, **N**) in combination with condensation drainage holes, order code (**H03**), to facilitate assembly/disassembly.

When the motors are used or stored outdoors, we recommend that they be kept under some sort of additional cover so that they are not subjected to direct intensive solar radiation, rain, snow, ice or dust over a long period of time. In such cases, technical consultation may be appropriate.

When the motors are used outdoors or in a corrosive environment, it is recommended that non-rusting screws are used externally.
Order code **H07**

Vibration-resistant version
Continuous vibration resistance to Class 3M4 according to IEC 721-3-3:199 (order code **H02** in combination with other article number supplements available only on request).
Order code **H02**

For availability of individual options for the relevant motor series, see section "Special versions" in the respective sections of the catalog.

Noise levels for line operation

The noise levels are measured in accordance with EN ISO 1680 in a dead room. It is specified as the A-valued measuring-surface sound pressure level L_{pfA} in dB (A).
This is the spatial mean value of the sound pressure levels measured on the measuring surface. The measuring surface is a cube 1 m away from the surface of the motor. The sound power level is also specified as L_{WA} in dB (A).
The specified values are valid at 50 Hz and rated output (see the selection and ordering data). The tolerance is +3dB. At 60 Hz, the values are approximately 4 dB (A) higher. Noise values for motors in converter operation on request.

To reduce noise levels, 2-pole motors of frame size 132 S and higher can be equipped with a unidirectional axial fan. The values are listed in the table "Low-noise version" below.

Clockwise rotation
Order code **F77**

Counter-clockwise rotation
Order code **F78**

Second shaft extension and/or mountings (mounting of brake, separately driven fan or encoder) not possible.

Low-noise version

Motor series	Frame size	2-pole motors	
		L_{pfA} dB(A)	L_{WA} dB(A)
1LE1 [1]	132	60	72
1MB1 [1]	160	60	72
1LE10, 1LE15/6, 1MB15/6	180	63	76
	200	64	77
1LE15/6, 1MB15/6	225	72	86
	250	73	87
	280	72	85
	315	76	90

[1] With the exception of 1LE1 and 1MB1 motors with option **F90** – version "Forced-air cooled motors without external fan and fan cover".

© Siemens AG 2015

Overview

All of the rotors are dynamically balanced with an inserted half key. This corresponds to vibration quantity level A (normal or standard). EN 60034-14 Sept. 2004 regulates the vibrational behavior of machinery. Based on ISO 8821, the key convention "half key (H)" must be used for balancing.

The type of key convention is stamped on the face of the shaft extension at the customer side DE/NDE:

F = Balancing with full key
(full-key convention)
H = Balancing with half key
(half-key convention) – standard
N = Balancing without key –
Plain text required (convention without key)

For motors up to frame size 112 the code is stamped on the rating plate.
Full-key balancing or balancing with full feather key (F) is possible, by specifying code **L02** (additional charge).

Balancing without feather key (N) is possible, by specifying code **L01** (additional charge).

Vibration quantity level A is the standard version and is valid up to a rated frequency of 60 Hz. If 2-pole motors of frame sizes 280 and 315 are to be rigidly installed, cast feet are necessary in order to comply with the vibration requirements of IEC 60034-14.

IE4 2-pole motors in frame size 315 and pole-changing motors (4-pole/2-pole) fulfill the vibration requirements specified in IEC 60034-14 only when the motor is elastically suspended.

The low-vibration version B can be supplied to fulfill stricter requirements on smooth running (additional charge).

Vibration quantity level B
Not possible with parallel roller bearings.
Order code **L00**

The order code **L00** vibration quantity level B is not possible in combination with order codes **G40**, **G41**, **G42**. 2-pole trans-standard aluminum motors in frame sizes 180 and 200 (14th position of article number is A, C, D, J, T, U, V) and order code **L00** are designed with cast-iron feet.

This vibration is assessed in accordance with vibration quantity level A or B according to EN 60034-14 (see table).

The limits stated in the table are applicable for uncoupled, freely suspended, idling motors.

For converter operation with frequencies higher than 60 Hz, special balancing is required for compliance with the specified limit values (plain text: maximum supply frequency/speed).

For further details, see the online help in the DT Configurator.

Limits (rms values) for max. vibration quantity for vibration displacement (s), vibration speed (v) and acceleration (a) for the shaft height H

Vibration quantity level	Machine installation	Shaft height H in mm								
		56 ≤ H ≤ 132			132 < H ≤ 280			H > 280		
		s_{rms} µm	v_{rms} mm/s	a_{rms} mm/s²	s_{rms} µm	v_{rms} mm/s	a_{rms} mm/s²	s_{rms} µm	v_{rms} mm/s	a_{rms} mm/s²
A	Free suspension	25	1.6	2.5	35	2.2	3.5	45	2.8	4.4
	Rigid clamping	21	1.3	2.0	29	1.8	2.8	37	2.3	3.6
B	Free suspension	11	0.7	1.1	18	1.1	1.7	29	1.8	2.8
	Rigid clamping	–	–	–	14	0.9	1.4	24	1.5	2.4

For details, see EN 60034-14 standard Sept. 2004.

If the type tests for machines with shaft height H > 280 mm demonstrate a specific component with twice the line frequency, the limit for maximum vibration quantity in Table 1 (grade A) can be increased from 2.3 mm/s (rms value) to 2.8 mm/s (rms value). Higher values must be agreed beforehand. A component with twice the line frequency is regarded as dominant if the type test shows that it is larger than 2.3 mm/s (rms value).

© Siemens AG 2015

Overview

Shaft extension

60° center hole acc. to DIN 332, Part 2 with M3 to M24 tapped hole depending on the shaft diameter (see dimension tables in section 2 of the catalog).

DE (shaft extension)	
Diameter	Thread
mm	mm
7 ... 10	DR M3
> 10 ... 13	DR M4
> 13 ... 16	DR M5
> 16 ... 21	DR M6
> 21 ... 24	DR M8
> 24 ... 30	DR M10
> 30 ... 38	DR M12
> 38 ... 50	DR M16/DS M16
> 50 ... 85	DR M20/DS M20
> 85 ... 130	DS M24

Shaft extension with standard dimensions, without feather keyway

For motor series 1LE1, 1MB1 and 1PC1, the standard shaft extension can be ordered with standard dimensions without a feather keyway.
Order code **L04**

Standard shaft made of stainless steel

A standard shaft made of stainless steel can be ordered (e.g. 1.4021) for the 1LE1, 1MB1 and 1PC1 motor series. This is only possible for shaft extensions of standard dimensions.
Order code **L06**

Special non-rusting materials are only available on request.

Non-standard cylindrical shaft extension

The non-standard cylindrical shaft extension can be used on the drive end (DE). The feather keys are supplied in every case.
Order code **Y58**

For order code **Y58** non-standard cylindrical shaft extension DE:

- Dimension D: less than or equal to the inner diameter of the roller bearing, tolerance band less than tolerance band acc. to EN 50347.
- Dimension E: smaller than or equal to 2 × length E (standard) of the shaft extension

See the table below "Admissible changes to the shaft extension DE" and the dimension tables in the relevant sections of the catalog.

Admissible changes to the shaft extension DE (**Y58**)

Motor series	Frame size	No. of poles	Shaft extension length E in mm		Shaft extension diameter D in mm		
			Standard	Up to max.	Min.	Standard	Up to max. [1]
1LE1	71	2 ... 8	30	60	14	14	15
	80	2 ... 8	40	80	19	19	20
	90		50	100	24	24	25
1LE1, 1MB1, 1PC1	100	2 ... 8	60	120	24	28	30
	112						
	132	2 ... 8	80	160	28	38	40
	160	2 ... 8	110	220	38	42	45
1LE15, 1LE16, 1MB1	180	2 ... 8	110	220	On request	48	48
	200	2 ... 8	110	220		55	55
	225	2	110	220		55	60
		4 ... 8	140	280		60	60
	250	2	140	280		60	70
		4 ... 8	140	280		65	70
	280	2	140	280		65	70
		4 ... 8	140	280		75	80
	315	2	140	280		65	75
		4 ... 8	140	280		80	90

Standard, cylindrical shaft extension NDE acc. to EN 50347

Order code **L05** (on request)

For a coupling output, the standard, cylindrical shaft extension can transmit the full rated output.

Please also inquire about the transmitted power and admissible cantilever force if belt pulleys, chains or gear pinions are used on the standard, cylindrical shaft extension.

A standard, cylindrical shaft extension NDE is not available if a rotary pulse encoder and/or a separately driven fan has been mounted onto the motor. Please inquire for mounted brakes.

Dimensions and tolerances for keyways and keys are designed to EN 50347. The motors are always supplied with a key inserted in the shaft.

If the second shaft extension has non-standard dimensions, this must be ordered with order code **L05** in combination with order code **Y59** non-standard shaft dimensions NDE.

The following applies for order code **L05** in combination with order code **Y59** non-standard shaft extension NDE:

- Dimension D: less than or equal to fan hub inner diameter, for frame size 160 tolerance band is less than tolerance band to EN 50347
- Dimension E: smaller than or equal to 2 × length E (standard) of the shaft extension

See the table below "Admissible changes to the shaft extension NDE" and the dimension tables in the relevant sections of the catalog.

Admissible changes to the shaft extension NDE (**Y59**)

Motor series	Frame size	No. of poles	Shaft extension length E in mm		Shaft extension diameter D in mm		
			Standard	Up to max.	Min.	Standard	Up to max. [1]
1LE1	71	2 ... 8	30	60		14	15
1LE1, 1MB1	80/90	2 ... 8	40	80		19	20
1LE1, 1MB1, 1PC1	100	2 ... 8	50	100		20	25
	112						
	132	2 ... 8	60	120		25	35
	160	2 ... 8	110	220		35	45
1LE15, 1LE16, 1MB1	180	2 ... 8	110	220	On request	48	48
	200	2 ... 8	110	220		55	55
	225	2	110	220		48	55
		4 ... 8	110	220		55	55
	250	2	110	220		55	70
		4 ... 8	140	280		60	70
	280	2	140	280		60	70
		4 ... 8	140	280		65	70
	315	2	140	280		60	75
		4 ... 8	140	280		70	75

Non-standard, cylindrical shaft extensions up to the specified lengths and diameters can be supplied for the motor series listed in the tables "Admissible changes to the shaft extension DE (**Y58**)" and "Admissible changes to the shaft extension NDE (**Y59**)". All other dimensions are available on request.

It is the responsibility of the customer to ensure that the admissible cantilever forces are reduced in accordance with the non-standard shaft extension.

[1] At maximum admissible diameter, a step increase in shaft diameter is not possible.

© Siemens AG 2015

Overview (continued)

Concentricity of the shaft extension, coaxiality and linear movement in accordance with DIN 42955 Tolerance R for flange-mounting motors

The following are specified in DIN 42955 with Tolerance N (normal) and Tolerance R (reduced):

1. Concentricity tolerances for the shaft extension
2. Coaxiality tolerances for the shaft extension and flange centering
3. Linear movement tolerances for the shaft extension and flange surface

The concentricity of the shaft extension, coaxiality and linear movement according to DIN 42955 Tolerance R for flange-mounting motors can be ordered using order code **L08**. This order code can be combined for motors with deep-groove bearings of series 60.., 62.. and 63… This cannot be supplied in combination with brake or encoder mounting.

Concentricity of the shaft extension can be ordered according to DIN 42955 Tolerance R for types of construction without flange with order code **L07**.

Concentricity tolerance for the shaft extension

Diameter of the cylindrical shaft extension	Concentricity tolerance	
d	N (normal)	R (reduced)
mm	mm	mm
≤ 10	0.03	0.015
> 10 … 18	0.035	0.018
> 18 … 30	0.04	0.021
> 30 … 50	0.05	0.025
> 50 … 80	0.06	0.03
> 80 … 120	0.07	0.035
> 120 … 180	0.08	0.04
> 180 … 250	0.09	0.045
> 250 … 315	0.1	0.05
> 315 … 400	0.11	0.055
> 400 … 500	0.125	0.063
> 500 … 600	0.14	0.07

IEC dimension code D

Coaxiality tolerance of the centering spigot and linear movement tolerance of the flange surface to the shaft extension axis

Diameter of the cylindrical shaft extension	Coaxiality tolerance and linear movement tolerance	
b_1	N (normal)	R (reduced)
mm	mm	mm
≤ 22	0.05	0.025
> 22 … < 40	0.06	0.03
40 … 100	0.08	0.04
> 100 … 230	0.1	0.05
> 230 … 450	0.125	0.063
> 450 … 800	0.16	0.08
> 800 … 1400	0.2	0.1
> 1400 … 2000	0.25	0.125
> 2000 … 2240	0.315	0.16

IEC dimension code N

[1] At maximum admissible diameter, a step increase in shaft diameter is not possible.

© Siemens AG 2015

Overview

Bearing lifetime (nominal lifetime)

The nominal bearing lifetime is defined acc. to standardized calculation procedures (ISO 281) and is reached or even exceeded for 90 % of the bearings when the motors are operated in compliance with the data provided in the catalog.

Under average operating conditions, a lifetime (L_{10h}) of 100 000 hours can be achieved.

Generally, the bearing lifetime is defined by the bearing size, the bearing load, the operating conditions, the speed and the grease lifetime. A bearing lifetime calculation is possible on request.

Bearing system

The bearing lifetime of motors with horizontal mounting is 40 000 hours if there is no additional axial loading at the coupling output and 20 000 hours when utilized according to the maximum admissible load. This assumes that the motor is operated at 50 Hz. The nominal bearing lifetime is reduced for converter operation at higher frequencies.

In order to achieve the calculated lifetime in continuous operation, the permissible vibration values (measured at bearing plate) must be determined according to evaluation zones A and B stipulated in ISO 10816. If higher vibration velocities occur in operation (e.g. with option H02), special measures must be taken (please inquire).

Due to their physical characteristics, variable-speed motors have a different bearing lifetime under the same load conditions – this relationship is linear, i.e. if the frequency increases by 20 % from 50 Hz to 60 Hz, the lifetime decreases by 20 % from 20 000 to 16 000 hours under the load conditions specified in the catalog.
If the frequency falls by 20 % from 50 Hz to 40 Hz, under the load conditions specified in the catalog, the lifetime rises by 20 % from 20 000 to 24 000 hours.

It should be observed that for types of construction IM B6, IM B7, IM B8, IM V5 and IM V6 the belt tension is only permitted to act parallel to the mounting plane or towards the mounting plane and the feet must be supported. Both feet must be secured for foot-mounting types of construction.

In the basic bearing system, the floating bearing is situated at the drive end (DE) and the located bearing is situated at the non-drive end (NDE).

The bearing system is axially preloaded with a spring element at the drive end (DE) to ensure smooth running of the motor without play (see Figure 1 in the diagrams of bearings on Page 1/54).

From frame size 160 upwards, the located bearing is axially secured at the non-drive end (NDE). Up to frame size 132, an additional axially-secured located bearing can be supplied on the non-drive end (NDE) complete with a retaining ring (see Figure 2 in the diagrams of bearings on Page 1/54).
Order code **L21**

On request, the located bearing can also be supplied at the drive end (DE) (see Figure 3 in the diagrams of bearings on Page 1/54). A located bearing at the drive end (DE) is recommended when gearing is installed or pumps and fans are mounted directly on the motor shaft.
Order code **L20**

For increased cantilever forces (e.g. belt drives), reinforced bearings can be used at the drive end (DE).
Order code **L22**

1LE1, 1MB1 and 1PC1 motors can be supplied with reinforced deep-groove bearings (size range 03) at both ends.
In this case, the bearing plates are made of cast iron (standard for series 1LE16 motors).
Order code **L25**

A measuring nipple for SPM shock pulse measurement can be mounted to check bearing vibration. The motors have an M8 tapped hole for each bearing plate and a measuring nipple with a protective cap. If a second tapped hole is provided, it is fitted with a sealing cap. Not possible for frame sizes <100.
Order code **Q01**

Bearing selection for increased cantilever forces (see the table "Bearing selection for 1LE10, 1MB10 and 1PC10 motors – Bearings for increased cantilever forces" on Page 1/51) – for the maximum axial load, see Page 1/60 onwards.

Bearing insulation

To prevent damage caused by bearing currents, insulated bearings can be supplied for frame sizes 225 to 315 – they are recommended for motors from frame size 225 upwards.
- **L50** (insulated DE bearing) means NDE located bearing as standard
- **L51** (insulated NDE bearing) means DE located bearing as standard
- **L50**+**L51** (insulated DE and NDE bearings) means NDE located bearing as standard
- Combination of order codes **L50** or **L51** or **L50**+**L51** with **L22** (bearing design for increased cantilever forces) means NDE located bearing as standard.

Permanent lubrication

On motors equipped with permanent lubrication, the bearing grease lifetime is matched to the bearing lifetime. This can, however, only be achieved if the motor is operated in accordance with the catalog specifications.
In the basic version, the motors have permanent lubrication.

Relubrication

For motors which can be regreased at defined regreasing intervals, the bearing lifetime can be extended and/or unfavorable factors such as temperature, mounting conditions, speed, bearing size and mechanical load can be compensated.

A regreasing device with lubricating nipple to DIN 3404-A can be optionally provided for frame sizes 100 to 160.
Order code **L23**
(frame sizes > 280 basic design, for the Performance Line motors of frame sizes > 160 basic design)

A regreasing device with M10 × 1 lubricating nipple to DIN 71412-A can be optionally provided for frame sizes 180 to 315.
Order code **L19**

In the case of motors equipped with regreasing device, information regarding regreasing intervals, quantity of grease, type of grease and any additional data is provided on the lubrication plate or rating plate. For regreasing intervals for the basic version, see the table "Grease lifetime and regreasing intervals for horizontal installation". The regreasing device cannot be installed when a holding brake is mounted (standard arrangement), order code **F01**.

Mechanical stress and grease lifetime

High speeds that exceed the rated speed with converter operation and the resulting increased vibrations alter the mechanical running smoothness and the bearings are subjected to increased mechanical stress. This reduces the grease lifetime and the bearing lifetime (please inquire where applicable).

The use of rigid couplings should be avoided as far as possible. For converter operation in particular, compliance with the mechanical limit speeds n_{max} at maximum supply frequency f_{max} is essential, see the following table "Mechanical limit speeds n_{max} at maximum supply frequency f_{max}".

We supply SIPLUS CMS condition monitoring systems for monitoring mechanical components. Servicing procedures are then easier to plan and execute on time in the context of preventative maintenance.
Order code **Q05**

© Siemens AG 2015

Overview (continued)

Mechanical limit speeds n_{max} at maximum supply frequency f_{max} (standard values) for 1LE1, 1PC1 motors – Basic version and 1LE15 and 1LE16 motors – Basic version with order codes L22, L25, L28

Frame size	Type	2-pole		4-pole		6-pole		8-pole	
		n_{max}	f_{max}	n_{max}	f_{max}	n_{max}	f_{max}	n_{max}	f_{max}
	1LE1...-	rpm	Hz	rpm	Hz	rpm	Hz	rpm	Hz
1LE10 motors, basic version									
80 M	**0D…**	6000	100	4200	140	3600	180	3000	200
90 S/L	**0E…**	6000	100	4200	140	3600	180	3000	200
	1LE15..-								
1LE15 Basic Line motors – bearings for increased cantilever forces – order code L22 **1LE15 Basic Line motors – deep-groove bearings reinforced at both ends – order code L25**									
71 M	**0C…**	6000	100	4200	140	3600	180	3000	200
80 M	**0D…**	6000	100	4200	140	3600	180	3000	200
90 S/L	**0E…**	6000	100	4200	140	3600	180	3000	200
	1LE1...- **1PC1...-**								
1LE10, 1PC1 motors, basic version **1LE15 Basic Line and 1LE16 Performance Line – bearings for increased cantilever forces – order code L22** **1LE15 Basic Line and 1LE16 Performance Line – deep-groove bearings reinforced at both ends – order code L25**									
100 L	**1A…**	6000	100	4200	140	3600	180	3000	200
112 M	**1B…**	6000	100	4200	140	3600	180	3000	200
132 S/M	**1C…**	5600	90	4200	140	3600	180	3000	200
160 M/L	**1D…**	4800	80	4200	140	3600	180	3000	200
180 M/L	**1E...**	4600	76	4200	140	3600	180	3000	200
200 L	**2A...**	4500	75	4200	140	3600	180	3000	200
	1LE15..- **1LE16..-**								
1LE15 Basic Line and 1LE16 Performance Line – basic version **1LE15 Basic Line and 1LE16 Performance Line – bearings for increased cantilever forces – order code L22** **1LE15 Basic Line and 1LE16 Performance Line – deep-groove bearings reinforced at both ends – order code L25** **1LE15 Basic Line and 1LE16 Performance Line – DE cylindrical roller bearings and NDE reinforced bearings – order code L28**									
180 M/L	**1E…**	4600	76	4200	140	3600	180	3000	200
200 L	**2A…**	4500	75	4200	140	3600	180	3000	200
225 S/M	**2B…**	4500	75	4500	150	4400	220	4400	293
250 M	**2C…**	3900	65	3700	123	3700	185	3700	247
280 S/M	**2D…**	3600	60	3000	100	3000	150	3000	200
315 S/M/L	**3A…**	3600	60	2600	87	2600	130	2600	173

The specified limit speeds are applicable to motors without additional mountings, such as brakes or rotary encoders. In such applications, the characteristics of the respective mounting parts must be taken into account.

Grease lifetime and regreasing intervals for horizontal installation

Motor series	Frame size	No. of poles	
Permanent lubrication [1]			
			Grease lifetime up to CT40 °C [2]
1LE1/1MB1/1PC1	71 … 250	2 ... 8	20 000 h or 40 000 h [3]
Regreasing [1]			
			Regreasing interval up to CT40 °C [2]
1LE1/1MB1/1PC1	100 … 160	2 ... 8	8000 h
	180 ... 280	2	4000 h
		4 ... 8	8000 h
	315	2	3000 h
		4 ... 8	6000 h

Regreasing requirements as a function of coolant temperature (CT)

With temperature class 155 (F):
CT 40 to 60 °C regreasing interval 8000 h
CT 60 to 80 °C regreasing interval 4000 h

With temperature class 180 (H):
CT 40 °C regreasing interval 8000 h
CT 45 to 60 °C regreasing interval 4000 h
CT 65 to 80 °C regreasing interval 2000 h

[1] For special uses and special greases, please inquire about grease lifetime and regreasing intervals.

[2] If the coolant temperature is increased by 10 K, the grease lifetime and regreasing interval are halved.

[3] 40 000 hours apply to horizontally installed motors with coupling output without additional axial loads.

© Siemens AG 2015

Overview (continued)

Bearing selection table for 1LE10, 1MB10 and 1PC10 motors – basic version

The bearing selection tables are only intended for planning purposes. Authoritative information on the actual type of bearings fitted in motors already supplied can be obtained by the factory by quoting the serial number or can be read from the rating plate.

When deep-groove bearings with side plates are used, the side plate is on the inside. Located bearing at drive end (DE) for 1LE1, 1MB1 and 1PC1 motors, see special version Figure 2 in the "Diagrams of bearings" on Page 1/54.

Frame size	No. of poles	Drive end (DE) bearing Horizontal and vertical types of construction	Non-drive end (NDE) bearing Horizontal and vertical types of construction	Fig. No. on Page 1/54
1LE10/1MB10				
80	2 ... 8	6004 2ZC3	6004 2ZC3	**Fig. 1**
90	2 ... 8	6205 2ZC3	6004 2ZC3	**Fig. 1**
1LE10/1MB10/1PC10				
100 L	2 ... 8	6206 2ZC3	6206 2ZC3	**Fig. 1**
112 M	2 ... 8	6206 2ZC3	6206 2ZC3	**Fig. 1**
132 S/M	2 ... 8	6208 2ZC3 [1]	6208 2ZC3 [1]	**Fig. 1**
160 M/L	2 ... 8	6209 2ZC3 [1]	6209 2ZC3 [1]	**Fig. 2**
1LE10				
180 M/L	2 ... 8	6210 ZC3 [2]	6210 ZC3 [2]	**Fig. 4**
200 L	2 ... 8	6212 ZC3 [2]	6212 ZC3 [2]	**Fig. 4**

Bearing selection table for 1LE10, 1MB10 and 1PC10 motors – Bearings for increased cantilever forces – Order code L22

Please inquire about noise and vibration data. The bearing selection tables are only intended for planning purposes. Authoritative information on the actual type of bearings fitted in motors already supplied can be obtained by the factory by quoting the serial number or can be read from the rating plate.
When deep-groove bearings with side plates are used, the side plate is on the inside.

Frame size	No. of poles	Drive end (DE) bearing Horizontal and vertical types of construction	Non-drive end NDE bearing Horizontal and vertical types of construction	Fig. No. on Page 1/54
1LE10/1MB10				
80/90	2 ... 8	Available soon	Available soon	Available soon
1LE10/1MB10/1PC10				
100 L	2 ... 8	6306 2ZC3	6206 2ZC3	**Fig. 1**
112 M	2 ... 8	6306 2ZC3	6206 2ZC3	
132 S/M	2 ... 8	6308 2ZC3 [1]	6208 2ZC3 [1]	
160 M/L	2 ... 8	6309 2ZC3 [1]	6209 2ZC3 [1]	**Fig. 2**
1LE10				
180 M/L	2 ... 8	6310 ZC3 [2]	6210 ZC3 [2]	**Fig. 4**
200 L	2 ... 8	6312 ZC3 [2]	6212 ZC3 [2]	**Fig. 4**

Bearing selection table for 1LE10, 1MB10 and 1PC10 motors – Deep-groove bearings reinforced at both ends – Order code L25

Please inquire about noise and vibration data. The bearing selection tables are only intended for planning purposes. Authoritative information on the actual type of bearings fitted in motors already supplied can be obtained by the factory by quoting the serial number or can be read from the rating plate.
When deep-groove bearings with side plates are used, the side plate is on the inside.

Frame size	No. of poles	Drive end (DE) bearing Horizontal and vertical types of construction	Non-drive end (NDE) bearing Horizontal and vertical types of construction	Fig. No. on Page 1/54
1LE10/1MB10				
80/90	2 ... 8	Available soon	Available soon	Available soon
1LE10/1MB10/1PC10				
100 L	2 ... 8	6306 2ZC3	6306 2ZC3	**Fig. 1**
112 M	2 ... 8	6306 2ZC3	6306 2ZC3	
132 S/M	2 ... 8	6308 2ZC3 [1]	6308 2ZC3 [1]	
160 M/L	2 ... 8	6309 2ZC3 [1]	6309 2ZC3 [1]	**Fig. 2**
1LE10				
180 M/L	2 ... 8	6310 ZC3 [2]	6310 ZC3 [2]	**Fig. 4**
200 L	2 ... 8	6312 ZC3 [2]	6312 ZC3 [2]	**Fig. 4**

[1] Deep-groove bearings with a side plate are used for regreasable versions (**L23**).

[2] Deep-groove bearings without a side plate are used for regreasable versions (**L23**).

© Siemens AG 2015

Overview (continued)

Bearing selection table for 1LE15/1MB15 and 1LE16/1MB16 motors (basic version)

Frame size	No. of poles	Drive end (DE) bearing Horizontal and vertical type of construction	Non-drive end (NDE) bearing Horizontal and vertical type of construction	Fig. No. on Page 1/54
1LE15, 1MB15 – Basic Line				
71 M	2 ... 8	6202 2ZC3	6202 2ZC3	**Fig. 1**
80 M	2 ... 8	6204 2ZC3	6204 2ZC3	**Fig. 1**
90 S/L	2 ... 8	6205 2ZC3	6204 2ZC3	**Fig. 1**
100 L	2 ... 8	6206 2ZC3 [1]	6206 2ZC3 [1]	**Fig. 1**
112 M	2 ... 8	6206 2ZC3 [1]	6206 2ZC3 [1]	
132 S/M	2 ... 8	6208 2ZC3 [1]	6208 2ZC3 [1]	
160 M/L	2 ... 8	6209 2ZC3 [1]	6209 2ZC3 [1]	**Fig. 2**
180 M/L	2 ... 8	6210 ZC3 [2]	6210 ZC3 [2]	**Fig. 4**
200 L	2 ... 8	6212 ZC3 [2]	6212 ZC3 [2]	
225 S/M	2 ... 8	6213 ZC3 [2]	6213 ZC3 [2]	**Fig. 1**
250 M	2 ... 8	6215 ZC3 [2]	6215 ZC3 [2]	
280 S/M	2	6315 C3	6315 C3	**Fig. 2**
	4 ... 8	6317 C3	6317 C3	
315 S/M/L	2	6316 C3	6316 C3	
	4 ... 8	6319 C3	6319 C3	
1LE16, 1MB16 – Performance Line				
100 L	2 ... 8	6306 2ZC3	6306 2ZC3	**Fig. 1**
112 M	2 ... 8	6306 2ZC3	6306 2ZC3	
132 S/M	2 ... 8	6308 2ZC3	6308 2ZC3	
160 M/L	2 ... 8	6309 ZC3	6309 ZC3	**Fig. 2**
180 M/L	2 ... 8	6310 C3	6310 C3	**Fig. 4**
200 L	2 ... 8	6312 C3	6312 C3	
225 S/M	2 ... 8	6313 C3	6313 C3	**Fig. 3**
250 M	2 ... 8	6315 C3	6315 C3	
280 S/M	2	6315 C3	6315 C3	
	4 ... 8	6317 C3	6317 C3	
315 S/M/L	2	6316 C3	6316 C3	
	4 ... 8	6319 C3	6319 C3	

[1] Deep-groove bearings with a side plate are used for regreasable versions (**L23**).

[2] Deep-groove bearings without a side plate are used for regreasable versions (**L23**).

© Siemens AG 2015

Overview (continued)

Bearing selection table for 1LE15, 1MB15, 1LE16 and 1MB16 motors (bearings for increased cantilever forces – Order code L22)

For NU bearings (cylindrical roller bearings), in contrast to bearings, a minimum cantilever force is required. Cylindrical roller bearings are not suitable for coupling output.

$F_{min} \sim F_{max}/2$

Frame size	No. of poles	Drive end (DE) bearing Horizontal and vertical type of construction	Non-drive end (NDE) bearing Horizontal and vertical type of construction	Fig. No. on Page 1/54
1LE15/1MB15 – Basic Line				
71 M	2 ... 8	6302 2ZC3	6202 2ZC3	
80 M	2 ... 8	6304 2ZC3	6204 2ZC3	
90 S/L	2 ... 8	6305 2ZC3	6205 2ZC3	
100 L	2 ... 8	6306 2ZC3 [1]	6206 2ZC3 [1]	
112 M	2 ... 8	6306 2ZC3 [1]	6206 2ZC3 [1]	
132 S/M	2 ... 8	6308 2ZC3 [1]	6208 2ZC3 [1]	
160 M/L	2 ... 8	6309 2ZC3 [1]	6209 2ZC3 [1]	
180 M/L	2 ... 8	NU 210	6210 C3	
200 L	2 ... 8	NU 212	6212 C3	
225 S/M	2 ... 8	NU 213	6213 C3	**Fig. 4**
250 M	2 ... 8	NU 215	6215 C3	
280 S/M	2	NU 315	6315 C3	**Fig. 5**
	4 ... 8	NU 317	6317 C3	
315 S/M/L	2	NU 316	6316 C3	
	4 ... 8	NU 319	6319 C3	
1LE16/1MB16 – Performance Line				
100 L	2 ... 8	[2]		
112 M	2 ... 8	[2]		
132 S/M	2 ... 8	[2]		
160 M/L	2 ... 8	[2]		
180 M/L	2 ... 8	NU 310	6310 C3	
200 L	2 ... 8	NU 312	6312 C3	
225 S/M	2 ... 8	NU 313	6313 C3	**Fig. 6**
250 M	2 ... 8	NU 315	6315 C3	
280 S/M	2	NU 315	6315 [3]	
	4 ... 8	NU 317	6317 [3]	
315 S/M/L	2	NU 316	6316 [3]	
	4 ... 8	NU 319	6319 [3]	

Bearing selection table for 1LE15/1MB15 and 1LE16/1MB16 motors (deep-groove bearings reinforced at both ends – Order code L25, for 1LE16 motors - standard)

Frame size	No. of poles	Drive end (DE) bearing Horizontal and vertical type of construction	Non-drive end (NDE) bearing Horizontal and vertical type of construction	Fig. No. on Page 1/54
1LE15, 1MB15 – Basic Line				
71 M	2 ... 8	6302 2ZC3	6302 2ZC3	
80 M	2 ... 8	6304 2ZC3	6304 2ZC3	
90 S/L	2 ... 8	6305 2ZC3	6305 2ZC3	
100 L	2 ... 8	6306 2ZC3 [1]	6306 2ZC3 [1]	
112 M	2 ... 8	6306 2ZC3 [1]	6306 2ZC3 [1]	
132 S/M	2 ... 8	6308 2ZC3 [1]	6308 2ZC3 [1]	
160 M/L	2 ... 8	6309 2ZC3 [1]	6309 2ZC3 [1]	
180 M/L	2 ... 8	6310 ZC3 [4]	6310 ZC3 [4]	
200 L	2 ... 8	6312 ZC3 [4]	6312 ZC3 [4]	
225 S/M	2 ... 8	6313 ZC3 [4]	6313 ZC3 [4]	**Fig. 4**
250 M	2 ... 8	6315 ZC3 [4]	6315 ZC3 [4]	
280 S/M	2	6315 C3 [3]	6315 C3 [3]	
	4 ... 8	6317 C3 [3]	6317 C3 [3]	
315 S/M/L	2	6316 C3 [3]	6316 C3 [3]	
	4 ... 8	6319 C3 [3]	6319 C3 [3]	
1LE16, 1MB16 – Performance Line – design of bearings as for Performance Line basic version				

[1] Deep-groove bearings with a side plate are used for regreasable versions (**L23**).

[2] Not permitted.

[3] As for basic version.

[4] Deep-groove bearings without a side plate are used for regreasable versions (**L23**).

© Siemens AG 2015

Overview (continued)

Diagrams of bearings

Fig. 1 Drive-end bearing / Non-drive end bearing

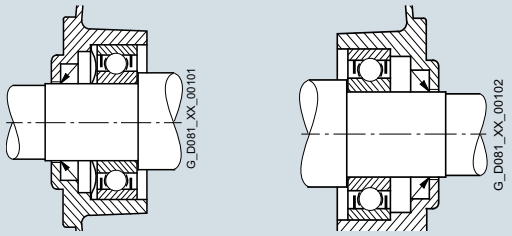

Fig. 2 Drive-end bearing / Non-drive end bearing
Located bearings for 1LE1 and 1MB1 frame size 160

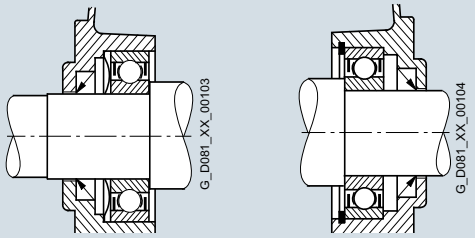

Fig. 3 Drive-end bearing / Non-drive end bearing

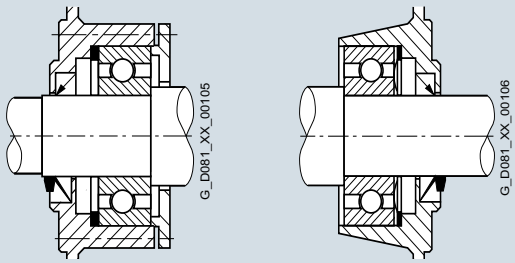

Fig. 4 Drive-end bearing / Non-drive end bearing

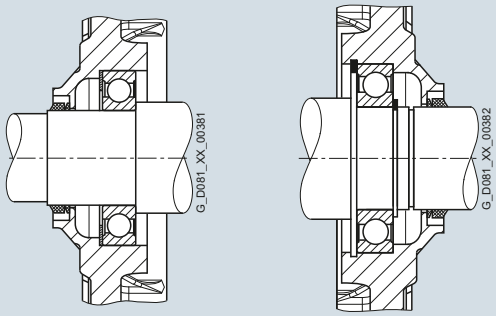

Fig. 5 Drive-end bearing / Non-drive end bearing

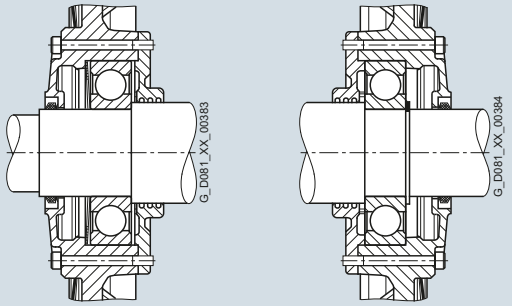

Fig. 6 Drive-end bearing / Non-drive end bearing

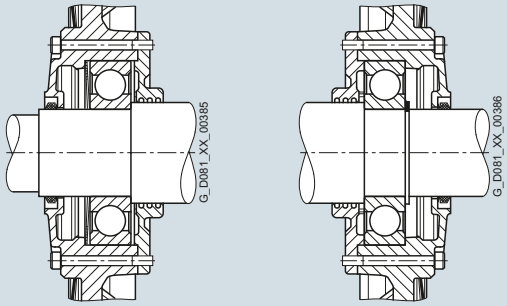

Admissible cantilever forces

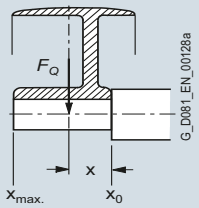

In order to calculate the admissible cantilever forces for a radial load, the line of force (i.e. the centerline of the pulley) of the cantilever force F_Q (N) must lie within the free shaft extension (dimension X).

Dimension x [mm] is the distance between the point of application of force F_Q and the shaft shoulder. Dimension x_{max} corresponds to the length of the shaft extension.

Total cantilever force $F_Q = c \cdot F_u$

The pre-tension factor c is a value gained from experience from the belt manufacturer. The following approximate value can be assumed:

For normal flat leather belts with an idler pulley c =2;
for V-belts c = 2 to 2.5;
for special synthetic belts (depending on the type of load and type of belt) c = 2 to 2.5.

The circumferential force F_u (N) is calculated using the following equation

$$F_u = 2 \cdot 10^7 \frac{P}{n \cdot D}$$

F_u circumferential force in N
P rated motor output (transmitted power) in kW
n rated motor speed in rpm
D belt pulley diameter in mm

© Siemens AG 2015

Overview (continued)

Admissible cantilever forces – basic version

1LE10, 1MB10 motors (frame sizes 80 ... 160) and 1PC10 (frame sizes 100 ... 160) at 50 Hz

Valid are: x_0 values for x = 0 and $x_{max.}$ values for x = l (l = shaft extension)

For motors			Admissible cantilever force F_Q	
			at x_0	at $x_{max.}$
Frame size	Type	No. of poles	N	N
1LE1 motors – values for IE2 motors with increased output [1]				
80	**1LE1001-0DA**	2	485	400
	1LE1001-0DB	4	625	515
	1LE1001-0DC	6	735	605
90	**1LE1001-0EA**	2	725	605
	1LE1001-0EB	4	920	775
	1LE1001-0EC	6	1090	910
100	**1LE1001-1AA**	2	1010	825
	1LE1001-1AB	4	1230	1010
	1LE1001-1AC	6	1440	1180
112	**1LE1001-1BA**	2	970	785
	1LE1001-1BB	4	1235	1000
	1LE1001-1BC	6	1440	1165
132	**1LE1001-1CA**	2	1470	1180
	1LE1001-1CB	4	1830	1470
	1LE1001-1CC	6	2150	1730
160	**1LE1001-1DA**	2	1550	1270
	1LE1001-1DB	4	1910	1550
	1LE1001-1DC	6	2230	1810
1LE1 motors – standard values for IE2 motors [1] **1MB1 motors – standard values for IE2 motors** [1] **1PC1 motors – standard values for IE2 motors** [1]				
80	**1LE1001-0DA** **1MB10.1-0DA** **1PC1001-0DA**	2	485	400
	1LE1001-0DB **1MB10.1-0DB** **1PC1001-0DB**	4	625	515
	1LE1001-0DC **1MB10.1-0DC** **1PC1001-0DC**	6	735	605
	1LE1001-0DD **1PC1001-0DD**	8	815	675
90	**1LE1001-0EA** **1MB10.1-0EA** **1PC1001-0EA**	2	725	605
	1LE1001-0EB **1MB10.1-0EB** **1PC1001-0EB**	4	920	775
	1LE1001-0EC **1MB10.1-0EC** **1PC1001-0EC**	6	1090	910
	1LE1001-0ED **1PC1001-0ED**	8	1230	1030

1LE10, 1MB10 motors (frame sizes 80 ... 160) and 1PC10 (frame sizes 100 ... 160) at 50 Hz

Valid are: x_0 values for x = 0 and $x_{max.}$ values for x = l (l = shaft extension)

For motors			Admissible cantilever force F_Q	
			at x_0	at $x_{max.}$
Frame size	Type	No. of poles	N	N
1LE1 motors – standard values for IE2 motors [1] **1MB1 motors – standard values for IE2 motors** [1] **1PC1 motors – standard values for IE2 motors** [1]				
100	**1LE1001-1AA** **1MB10.1-1AA** **1PC1001-1AA**	2	1020	815
	1LE1001-1AB **1MB10.1-1AB** **1PC1001-1AB**	4	1250	1000
	1LE1001-1AC **1MB10.1-1AC** **1PC1001-1AC**	6	1450	1155
	1LE1001-1AD **1MB10.1-1AD** **1PC1001-1AD**	8	1615	1290
112	**1LE1001-1BA** **1MB10.1-1BA** **1PC1001-1BA**	2	1000	790
	1LE1001-1BB **1MB10.1-1BB** **1PC1001-1BB**	4	1250	990
	1LE1001-1BC **1MB10.1-1BC** **1PC1001-1BC**	6	1450	1150
	1LE1001-1BD **1MB10.1-1BD** **1PC1001-1BD**	8	1610	1275
132	**1LE1001-1CA** **1MB10.1-1CA** **1PC1001-1CA**	2	1505	1170
	1LE1001-1CB **1MB10.1-1CB** **1PC1001-1CB**	4	1880	1460
	1LE1001-1CC **1MB10.1-1CC** **1PC1001-1CC**	6	2170	1680
	1LE1001-1CD **1MB10.1-1CD** **1PC1001-1CD**	8	2420	1880
160	**1LE1001-1DA** **1MB10.1-1DA** **1PC1001-1DA**	2	1560	1240
	1LE1001-1DB **1MB10.1-1DB** **1PC1001-1DB**	4	2040	1590
	1LE1001-1DC **1MB10.1-1DC** **1PC1001-1DC**	6	2350	1820
	1LE1001-1DD **1MB10.1-1DD** **1PC1001-1DD**	8	2610	2030
180	**1LE10..**	2 4 6	1670 2150 2500	1380 1740 2000
200	**1LE10..**	2 4 6	2460 3180 3600	2070 2630 2980

In the case of cantilever forces that exceed this, see "Bearings for increased cantilever forces".

Note:

1PC10 only for frame sizes 100 to 160.

[1] For IE1 motors, the admissible cantilever force can be increased by up to 5 %.

© Siemens AG 2015

Overview (continued)

1LE15 and 1MB15 motors at 50 Hz

Valid are: x_0 values for x = 0 and $x_{max.}$ values for x = l (l = shaft extension)

For motors		Admissible cantilever force	
		at x_0	at x_{max}
Frame size	No. of poles	N	N
1LE1501/03/21/23 – Basic Line			
71	2	400	340
	4	500	420
	6	570	490
80	2	680	570
	4	860	720
	6	980	820
90	2	760	620
	4	950	790
	6	1090	900
100	2	1010	815
	4	1230	1000
	6	1440	1155
	8	1615	1290
112	2	970	785
	4	1235	990
	6	1440	1150
	8	1610	1275
132	2	1470	1170
	4	1830	1460
	6	2150	1680
	8	2420	1880
160	2	1550	1240
	4	1910	1550
	6	2230	1810
	8	2610	2030
180	2	1670	1380
	4	2150	1740
	6	2500	2000
200	2	2460	2070
	4	3180	2630
	6	3600	2980
225	2	2850	2300
	4	3550	2800
	6	4050	3240
	8	4500	3500
250	2	3250	2600
	4	4100	3400
	6	4800	4000
	8	5250	4450
280	2	5200	4200
	4	8500	7000
	6	9800	8150
	8	10800	9000
315 S/M	2	5300	4500
	4	9150	7400
	6	10750	8750
	8	11600	9600
315 L	2	4900	4300
	4	8900	7700
	6	10100	9150
	8	11100	10200

1LE16 and 1MB16 motors at 50 Hz

Valid are: x_0 values for x = 0 and $x_{max.}$ values for x = l (l = shaft extension)

For motors		Admissible cantilever force	
		at x_0	at x_{max}
Frame size	No. of poles	N	N
1LE1601/03/21/23 – Performance Line			
100	2	1585	1270
	4	1960	1575
	6	2270	1815
	8	2520	2015
112	2	1545	1240
	4	1960	1555
	6	2270	1800
	8	2510	1990
132	2	2285	1795
	4	2860	2250
	6	3320	2580
	8	3700	2870
160	2	2800	2170
	4	3450	2750
	6	4000	3160
	8	4510	3500
180	2	3250	2610
	4	4110	3270
	6	4720	3740
200	2	4320	3550
	4	5480	4500
	6	6220	5110
225	2	5000	4150
	4	6250	4900
	6	7200	5750
	8	7800	6200
250	2	6000	4800
	4	7600	6200
	6	8750	7350
	8	9500	8000
280	2	5200	4200
	4	8500	7000
	6	9800	8150
	8	10800	9000
315 S/M	2	5300	4500
	4	9150	7400
	6	10750	8750
	8	11600	9600
315 L	2	4900	4300
	4	8900	7700
	6	10100	9150
	8	11100	10200

In the case of cantilever forces that exceed this, see "Bearings for increased cantilever forces".

© Siemens AG 2015

Overview (continued)

Admissible cantilever forces – bearings for increased cantilever forces – order code **L22**

1LE10, 1MB10 motors (frame sizes 80 ... 160) and 1PC10 (frame sizes 100 ... 160) at 50 Hz with reinforced deep-groove bearings at DE

Valid are: x_0 values for x = 0 and $x_{max.}$ values for x = l (l = shaft extension)

For motors			Admissible cantilever force F_Q	
			at x_0	at x_{max}
Frame size	Type	No. of poles	N	N
1LE1 motors – values for IE2 motors with increased output [1]				
100	**1LE1001-1AA**	2	1585	1300
	1LE1001-1AB	4	1960	1610
	1LE1001-1AC	6	2270	1865
112	**1LE1001-1BA**	2	1545	1250
	1LE1001-1BB	4	1960	1585
	1LE1001-1BC	6	2270	1835
132	**1LE1001-1CA**	2	2285	1840
	1LE1001-1CB	4	2860	2300
	1LE1001-1CC	6	3320	2670
160	**1LE1001-1DA**	2	2800	2240
	1LE1001-1DB	4	3450	2270
	1LE1001-1DC	6	4000	3200
1LE1 motors – standard values for IE2 motors [1] **1MB1 motors – standard values for IE2 motors** [1] **1PC1 motors – standard values for IE2 motors** [1]				
100	**1LE1001-1AA** **1MB10.1-1AA** **1PC1001-1AA**	2	1585	1270
	1LE1001-1AB **1MB10.1-1AB** **1PC1001-1AB**	4	1960	1575
	1LE1001-1AC **1MB10.1-1AC** **1PC1001-1AC**	6	2270	1815
	1LE1001-1AD **1MB10.1-1AD** **1PC1001-1AD**	8	2520	2015
112	**1LE1001-1BA** **1MB10.1-1BA** **1PC1001-1BA**	2	1545	1240
	1LE1001-1BB **1MB10.1-1BB** **1PC1001-1BB**	4	1960	1555
	1LE1001-1BC **1MB10.1-1BC** **1PC1001-1BC**	6	2270	1800
	1LE1001-1BD **1MB10.1-1BD** **1PC1001-1BD**	8	2510	1990
132	**1LE1001-1CA** **1MB10.1-1CA** **1PC1001-1CA**	2	2285	1795
	1LE1001-1CB **1MB10.1-1CB** **1PC1001-1CB**	4	2860	2250
	1LE1001-1CC **1MB10.1-1CC** **1PC1001-1CC**	6	3320	2580
	1LE1001-1CD **1MB10.1-1CD** **1PC1001-1CD**	8	3700	2870
160	**1LE1001-1DA** **1MB10.1-1DA** **1PC1001-1DA**	2	2800	2170
	1LE1001-1DB **1MB10.1-1DB** **1PC1001-1DB**	4	3450	2750
	1LE1001-1DC **1MB10.1-1DC** **1PC1001-1DC**	6	4000	3160
	1LE1001-1DD **1MB10.1-1DD** **1PC1001-1DD**	8	4510	3500
180	**1LE1001-1EA**	2	3250	2610
		4	4110	3270
		6	4720	3740
		8	5130	4050
200	**1LE1001-2AA**	2	4320	3550
		4	5480	4500
		6	6220	5110
		8	6870	5640

[1] For IE1 motors, the admissible cantilever force can be increased by up to 5 %.

1LE15 and 1MB15 motors at 50 Hz with reinforced deep-groove bearings at DE up to frame size 160 with cylindrical roller bearings at DE in frame size 180 and above

Valid are: x_0 values for x = 0 and $x_{max.}$ values for x = l (l = shaft extension)

For motors			Admissible cantilever force	
			at x_0	at x_{max}
Frame size	Type	No. of poles	N	N
1LE1501/03/21/23, 1MB15 – Basic Line				
71/80/90			Available soon	Available soon
100	**1LE15..-1AA** **1MB15..-1AA**	2	1585	1270
	1LE15..-1AB **1MB15..-1AB**	4	1960	1575
	1LE15..-1AC **1MB15..-1AC**	6	2270	1815
	1LE15..-1AD **1MB15..-1AD**	8	2520	2015
112	**1LE15..-1BA** **1MB15..-1BA**	2	1545	1240
	1LE15..-1BB **1MB15..-1BB**	4	1960	1555
	1LE15..-1BC **1MB15..-1BC**	6	2270	1800
	1LE15..-1BD **1MB15..-1BD**	8	2510	1990
132	**1LE15..-1CA** **1MB15..-1CA**	2	2285	1795
	1LE15..-1CB **1MB15..-1CB**	4	2860	2250
	1LE15..-1CC **1MB15..-1CC**	6	3320	2580
	1LE15..-1CD **1MB15..-1CD**	8	3700	2870
160	**1LE15..-1DA** **1MB15..-1DA**	2	2800	2170
	1LE15..-1DB **1MB15..-1DB**	4	3450	2750
	1LE15..-1DC **1MB15..-1DC**	6	4000	3160
	1LE15..-1DD **1MB15..-1DD**	8	4510	3500
180	**1LE15..-1EA** **1MB15..-1EA**	2	4520	3630
	1LE15..-1EB **1MB15..-1EB**	4	5560	4050
	1LE15..-1EC **1MB15..-1EC**	6	6280	4050
	1LE15..-1ED **1MB15..-1ED**	8	6790	4050
200	**1LE15..-2AA** **1MB15..-2AA**	2	6840	5610
	1LE15..-2AB **1MB15..-2AB**	4	8440	6000
	1LE15..-2AC **1MB15..-2AC**	6	9480	6000
	1LE15..-2AD **1MB15..-2AD**	8	10100	6000
225	**1LE15..-2BA** **1MB15..-2BA**	2	8000	6800
	1LE15..-2BB **1MB15..-2BB**	4	9800	7250
	1LE15..-2BC **1MB15..-2BC**	6	11100	7300
	1LE15..-2BD **1MB15..-2BD**	8	11300	7300
250	**1LE15..-2CA** **1MB15..-2CA**	2	9500	7400
	1LE15..-2CB **1MB15..-2CB**	4	12500	9400
	1LE15..-2CC **1MB15..-2CC**	6	13500	9700
	1LE15..-2CD **1MB15..-2CD**	8	14700	9700
280 [2]	**1LE15..-2DA** **1MB15..-2DA**	2	16500	9800
315 [2]	**1LE15..-3AA** **1MB15..-3AA**	2	18400	7600

Note:
1PC10 and 1MB10 not for frame sizes 180 to 200.

[2] For admissible cantilever forces for frame sizes 280 to 315 in 4-pole and 6-pole versions, see diagrams on the following page.

© Siemens AG 2015

Overview (continued)

1LE16 and 1MB16 motors at 50 Hz with reinforced cylindrical roller bearings (DE)
Valid are: x_0 values for x = 0 and $x_{max.}$ values for x = l (l = shaft extension)

For motors		Admissible cantilever force	
		at x_0	at x_{max}
Frame size	No. of poles	N	N
1LE1601/03/21/23, 1MB16 – Performance Line			
100	2, 4, 6, 8	–	–
112	2, 4, 6, 8	–	–
132	2, 4, 6, 8	–	–
160	2, 4, 6, 8	–	–
180	2	8150	4050
	4	9800	4050
	6	9800	4050
200	2	11200	6000
	4	13600	6000
	6	13600	6000
225	2	12700	7900
	4	15700	7250
	6	15700	7300
	8	15700	7300
250	2	17000	7750
	4	21000	9400
	6	21000	9700
	8	21000	9700
280 [1]	2	16500	9800
315 S, M [1]	2	18400	7600
315 L [1]	2	18400	7600

Frame size 280, 4- to 8-pole

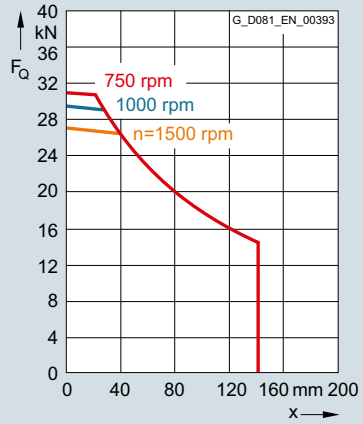

Frame size 315 S/M, 4-pole to 8-pole

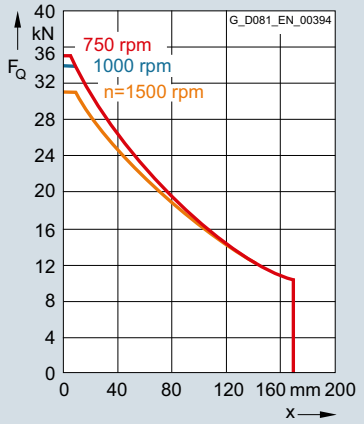

Frame size 315 L, 4-pole to 8-pole

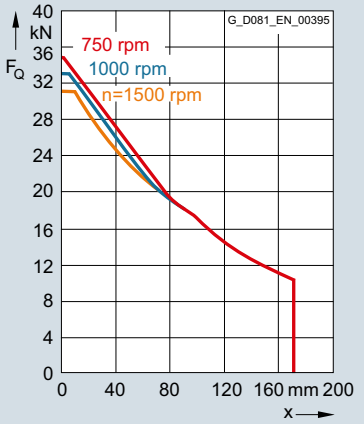

[1] For admissible cantilever forces for frame sizes 280 to 315 in 4-pole and 6-pole versions, see diagrams on this page.

© Siemens AG 2015

Overview (continued)

Admissible cantilever forces – deep-groove bearings reinforced at both ends – order code **L25**

1LE10, 1MB10 motors (frame sizes 80 ... 160) and 1PC10 (frame sizes 100 ... 160) at 50 Hz with reinforced deep-groove bearings at both ends

Valid are: x_0 values for x = 0 and $x_{max.}$ values for x = l (l = shaft extension)

For motors		Admissible cantilever force	
		at x_0	at x_{max}
Frame size	No. of poles	N	N
1LE1501/03/21/23, 1MB15 – Basic Line			
1LE10, 1MB10, 1PC10			
71/80/90		Available soon	Available soon
100	2	1585	1270
	4	1960	1575
	6	2270	1815
	8	2520	2015
112	2	1545	1240
	4	1960	1555
	6	2270	1800
	8	2510	1990
132	2	2285	1795
	4	2860	2250
	6	3320	2580
	8	3700	2870
160	2	2800	2170
	4	3450	2750
	6	4000	3160
	8	4510	3500
180	2	3250	2610
	4	4110	3270
	6	4720	3740
	8	5130	4050
200	2	4320	3550
	4	5480	4500
	6	6220	5110
	8	6870	5640
225	2	5000	4150
	4	6250	4900
	6	7200	5750
	8	7800	6200
250	2	6000	4800
	4	7600	6200
	6	8750	7350
	8	9500	8000
280 [1)]	2, 4, 6, 8	–	–
315	2, 4, 6, 8	–	–

Admissible cantilever forces – reinforced bearings at both ends. DE bearings for increased cantilever forces – order code **L28**

1LE15 and 1MB15 motors at 50 Hz with cylindrical roller bearings at DE with deep-groove bearings at NDE

Valid are: x_0 values for x = 0 and $x_{max.}$ values for x = l (l = shaft extension)

For motors		Admissible cantilever force	
		at x_0	at x_{max}
Frame size	No. of poles	N	N
1LE1501/03/21/23, 1MB15 – Basic Line			
100	2, 4, 6, 8	–	–
112	2, 4, 6, 8	–	–
132	2, 4, 6, 8	–	–
160	2, 4, 6, 8	–	–
180	2	8150	4050
	4	9800	4050
	6	9800	4050
200	2	11200	6000
	4	13600	6000
	6	13600	6000
225	2	12700	7900
	4	15700	7250
	6	15700	7300
	8	15700	7300
250	2	17000	7750
	4	21000	9400
	6	21000	9700
	8	21000	9700
280	2, 4, 6, 8	–	–
315 S, M	2, 4, 6, 8	–	–
315 L	2, 4, 6, 8	–	–

Note:

1PC10 only for frame sizes 100 to 160.

[1)] For values for frame sizes 280 to 315, see Page 1/56.
For frame sizes 280 to 315, bearings of size 63 are standard.

© Siemens AG 2015

Overview (continued)

Admissible axial load

1LE10, 1MB10 and 1PC10 motors in vertical type of construction – basic version (with the exception of motors with increased output)

Frame size	3000 rpm				1500 rpm				1000 rpm				750 rpm			
	Shaft extension pointing															
	down		**up**		**down**		**up**		**down**		**up**		**down**		**up**	
	Load		Load		Load		Load		Load		Load		Load		Load	
	down	up	down	up	down	up	down	up	down	up	down	up	down	up	down	up
	N	N	N	N	N	N	N	N	N	N	N	N	N	N	N	N
80	110	425	360	160	100	540	480	165	100	650	590	165	100	760	700	165
90	110	440	360	180	100	680	580	190	100	920	820	190	100	1150	1050	190
100	140	700	550	280	130	990	820	285	130	1280	1110	285	130	1560	1390	285
112	140	710	550	300	130	1000	820	310	130	1290	1110	310	130	1570	1390	310
132	200	1200	950	470	180	1680	1200	470	180	1900	1600	470	190	2200	1900	440
160	1500	1400	950	1900	1900	1800	1300	2200	2200	2200	1600	2700	2700	2700	1950	2900
180	1260	1230	500	1990	1600	1770	840	2530	1920	2150	1160	2900	2050	2500	1290	3260
200	1810	1720	660	2870	2410	2480	1260	3630	2700	3050	1550	4200	3060	3510	1910	4660

The values shown do not assume a cantilever force on the shaft extension.
The admissible loads are valid for operation at 50 Hz; for 60 Hz, please inquire.

The calculation of the admissible axial load was based on the drive with generally available coupling. For suppliers, see the relevant section of the catalog "Accessories" on Page 2/88.
Please inquire if the load direction alternates.

1LE10, 1MB10 motors [1] and 1PC10 [1] in horizontal type of construction – basic version (except for motors with increased output)

Frame size	3000 rpm				1500 rpm				1000 rpm				750 rpm			
	Tensile load	Thrust load (N)			Tensile load	Thrust load (N)			Tensile load	Thrust load (N)			Tensile load	Thrust load (N)		
		with radial load at		without radial load		with radial load at		without radial load		with radial load at		without radial load		with radial load at		without radial load
		x_0	$x_{max.}$			x_0	$x_{max.}$			x_0	$x_{max.}$			x_0	$x_{max.}$	
	N	N	N	N	N	N	N	N	N	N	N	N	N	N	N	N
80	140	190	150	400	140	300	260	510	140	330	280	620	140	340	290	730
90	150	300	280	400	150	400	360	630	150	480	430	870	150	550	500	1100
100	220	450	350	630	220	600	500	910	220	650	550	1200	220	750	650	1480
112	220	450	350	630	220	600	500	910	220	650	550	1200	220	750	650	1480
132	350	650	520	1200	350	850	700	1600	350	1020	890	1900	350	1150	1020	2200
160	1500	850	720	1500	1500	1050	920	1800	1500	1250	1120	2200	1500	1350	1220	2600
180	1630	–	–	870	2070	–	–	1310	2420	–	–	1660	2660	–	–	1900
200	2340	–	–	1190	3020	–	–	1870	3450	–	–	2300	3860	–	–	2710

The values shown do not assume a cantilever force on the shaft extension.
The admissible loads are valid for operation at 50 Hz; for 60 Hz, please inquire.

The calculation of the admissible axial load was based on the drive with generally available coupling. For suppliers, see the the section "Accessories" on Page 2/88.
Please inquire if the load direction alternates.

[1] 1MB10 and 1PC10 motors only available for frame sizes 100 to 160.

© Siemens AG 2015

Overview (continued)

1LE15, 1MB15, 1LE16 and 1MB16 motors in vertical type of construction – Basic version

Frame size	Type	3000 rpm				1500 rpm				1000 rpm				750 rpm			
		Shaft extension pointing															
		down		**up**		**down**		**up**		**down**		**up**		**down**		**up**	
		Load down N	Load up N	Load down N	Load up N	Load down N	Load up N	Load down N	Load up N	Load down N	Load up N	Load down N	Load up N	Load down N	Load up N	Load down N	Load up N
1LE15, 1MB15 – Basic Line																	
71	**1..1501-0CA2**	220	100	80	240	–	–	–	–	–	–	–	–	–	–	–	–
	1..1501-0CA3	220	90	70	240	–	–	–	–	–	–	–	–	–	–	–	–
	1..1503-0CA2	220	90	70	240	–	–	–	–	–	–	–	–	–	–	–	–
	1..1503-0CA3	210	100	60	250	–	–	–	–	–	–	–	–	–	–	–	–
	1..1501-0CB2	–	–	–	–	210	220	180	240	–	–	–	–	–	–	–	–
	1..1501-0CB3	–	–	–	–	210	210	170	250	–	–	–	–	–	–	–	–
	1..1503-0CB2	–	–	–	–	210	210	170	250	–	–	–	–	–	–	–	–
	1..1503-0CB3	–	–	–	–	200	200	150	260	–	–	–	–	–	–	–	–
	1..1501-0CC2	–	–	–	–	–	–	–	–	210	300	260	250	–	–	–	–
	1..1501-0CC3	–	–	–	–	–	–	–	–	210	300	260	250	–	–	–	–
	1..1503-0CC2	–	–	–	–	–	–	–	–	210	300	260	250	–	–	–	–
	1..1503-0CC3	–	–	–	–	–	–	–	–	200	290	230	260	–	–	–	–
80	**1..1501-0DA2**	240	280	240	280	–	–	–	–	–	–	–	–	–	–	–	–
	1..1501-0DA3	230	270	220	280	–	–	–	–	–	–	–	–	–	–	–	–
	1..1503-0DA2	230	270	220	280	–	–	–	–	–	–	–	–	–	–	–	–
	1..1503-0DA3	230	270	210	290	–	–	–	–	–	–	–	–	–	–	–	–
	1..1501-0DB2	–	–	–	–	230	460	400	290	–	–	–	–	–	–	–	–
	1..1501-0DB3	–	–	–	–	230	450	390	290	–	–	–	–	–	–	–	–
	1..1503-0DB2	–	–	–	–	230	450	390	290	–	–	–	–	–	–	–	–
	1..1503-0DB3	–	–	–	–	220	440	360	300	–	–	–	–	–	–	–	–
	1..1501-0DC2	–	–	–	–	–	–	–	–	230	600	540	290	–	–	–	–
	1..1501-0DC3	–	–	–	–	–	–	–	–	220	590	510	300	–	–	–	–
	1..1503-0DC2	–	–	–	–	–	–	–	–	220	590	510	300	–	–	–	–
	1..1503-0DC3	–	–	–	–	–	–	–	–	210	590	490	300	–	–	–	–
90	**1..1501-0EA0**	210	300	230	280	–	–	–	–	–	–	–	–	–	–	–	–
	1..1501-0EA4	210	300	220	290	–	–	–	–	–	–	–	–	–	–	–	–
	1..1503-0EA0	210	300	220	290	–	–	–	–	–	–	–	–	–	–	–	–
	1..1503-0EA4	210	290	210	290	–	–	–	–	–	–	–	–	–	–	–	–
	1..1501-0EB0	–	–	–	–	210	480	400	290	–	–	–	–	–	–	–	–
	1..1501-0EB4	–	–	–	–	200	480	380	300	–	–	–	–	–	–	–	–
	1..1503-0EB0	–	–	–	–	200	480	380	300	–	–	–	–	–	–	–	–
	1..1503-0EB4	–	–	–	–	200	460	360	300	–	–	–	–	–	–	–	–
	1..1501-0EC0	–	–	–	–	–	–	–	–	210	620	540	290	–	–	–	–
	1..1501-0EC4	–	–	–	–	–	–	–	–	200	620	520	300	–	–	–	–
	1..1503-0EC0	–	–	–	–	–	–	–	–	200	620	520	300	–	–	–	–
	1..1503-0EC4	–	–	–	–	–	–	–	–	200	610	510	300	–	–	–	–
100	**1..15.1-1AA4**	300	450	340	410	–	–	–	–	–	–	–	–	–	–	–	–
	1..15.1-1AA6	290	440	310	420	–	–	–	–	–	–	–	–	–	–	–	–
	1..15.3-1AA4	290	440	310	420	–	–	–	–	–	–	–	–	–	–	–	–
	1..15.1-1AB4	–	–	–	–	280	720	570	430	–	–	–	–	–	–	–	–
	1..15.1-1AB5	–	–	–	–	270	710	540	440	–	–	–	–	–	–	–	–
	1..15.1-1AB6	–	–	–	–	250	710	500	460	–	–	–	–	–	–	–	–
	1..15.3-1AB4	–	–	–	–	250	710	500	460	–	–	–	–	–	–	–	–
	1..15.3-1AB5	–	–	–	–	250	710	500	460	–	–	–	–	–	–	–	–
	1..15.1-1AC4	–	–	–	–	–	–	–	–	260	930	740	450	–	–		
	1..15.1-1AC6	–	–	–	–	–	–	–	–	240	920	690	470	–	–		
	1..15.1-1AD4	–	–	–	–	–	–	–	–	–	–	–	–	280	1100	940	440
	1..15.1-1AD5	–	–	–	–	–	–	–	–	–	–	–	–	260	1100	910	450
112	**1..15.1-1BA2**	280	460	310	430	–	–	–	–	–	–	–	–	–	–	–	–
	1..15.1-1BA6	260	460	270	450	–	–	–	–	–	–	–	–	–	–	–	–
	1..15.3-1BA2	260	460	270	450	–	–	–	–	–	–	–	–	–	–	–	–
	1..15.1-1BB2	–	–	–	–	260	730	540	450	–	–	–	–	–	–	–	–
	1..15.1-1BB6	–	–	–	–	250	730	510	470	–	–	–	–	–	–	–	–
	1..15.3-1BB2	–	–	–	–	250	730	510	470	–	–	–	–	–	–	–	–
	1..15.1-1BC2	–	–	–	–	–	–	–	–	250	940	730	460	–	–	–	–
	1..15.1-1BC6	–	–	–	–	–	–	–	–	240	930	700	470	–	–	–	–
	1..15.3-1BC2	–	–	–	–	–	–	–	–	240	930	700	470	–	–	–	–
	1..15.1-1BD2	–	–	–	–	–	–	–	–	–	–	–	–	250	1110	900	460

© Siemens AG 2015

Overview (continued)

Frame size	Type	3000 rpm				1500 rpm				1000 rpm				750 rpm			
		Shaft extension pointing															
		down		**up**		**down**		**up**		**down**		**up**		**down**		**up**	
		Load down N	up N	Load down N	up N	Load down N	up N	Load down N	up N	Load down N	up N	Load down N	up N	Load down N	up N	Load down N	up N
132	**1..15.1-1CA0**	510	600	370	740	–	–	–	–	–	–	–	–	–	–	–	–
	1..15.1-1CA1	490	610	340	760	–	–	–	–	–	–	–	–	–	–	–	–
	1..15.3-1CA0	490	610	340	760	–	–	–	–	–	–	–	–	–	–	–	–
	1..15.1-1CA6	450	610	260	800	–	–	–	–	–	–	–	–	–	–	–	–
	1..15.3-1CA1	450	610	260	800	–	–	–	–	–	–	–	–	–	–	–	–
	1..15.1-1CB0	–	–	–	–	490	1000	730	760	–	–	–	–	–	–	–	–
	1..15.1-1CB2	–	–	–	–	460	1000	670	790	–	–	–	–	–	–	–	–
	1..15.1-1CB6	–	–	–	–	410	1010	580	840	–	–	–	–	–	–	–	–
	1..15.3-1CB0	–	–	–	–	410	1010	580	840	–	–	–	–	–	–	–	–
	1..15.3-1CB2	–	–	–	–	410	1010	580	840	–	–	–	–	–	–	–	–
	1..15.1-1CC0	–	–	–	–	–	–	–	–	490	1310	1040	760	–	–	–	–
	1..15.1-1CC2	–	–	–	–	–	–	–	–	470	1310	1000	780	–	–	–	–
	1..15.1-1CC3	–	–	–	–	–	–	–	–	440	1310	940	810	–	–	–	–
	1..15.3-1CC0	–	–	–	–	–	–	–	–	440	1310	940	810	–	–	–	–
	1..15.3-1CC2	–	–	–	–	–	–	–	–	440	1310	940	810	–	–	–	–
	1..15.1-1CC6	–	–	–	–	–	–	–	–	390	1320	850	860	–	–	–	–
	1..15.3-1CC3	–	–	–	–	–	–	–	–	400	1320	850	860	–	–	–	–
	1..15.1-1CD0	–	–	–	–	–	–	–	–	–	–	–	–	480	1570	1280	770
	1..15.1-1CD2	–	–	–	–	–	–	–	–	–	–	–	–	450	1580	1220	810
160	**1..15.1-1DA2**	1560	890	500	1950	–	–	–	–	–	–	–	–	–	–	–	–
	1..15.1-1DA3	1510	900	450	1960	–	–	–	–	–	–	–	–	–	–	–	–
	1..15.3-1DA2	1510	900	450	1960	–	–	–	–	–	–	–	–	–	–	–	–
	1..15.1-1DA4	1470	900	410	1960	–	–	–	–	–	–	–	–	–	–	–	–
	1..15.3-1DA3	1470	900	410	1960	–	–	–	–	–	–	–	–	–	–	–	–
	1..15.1-1DA6	1370	900	310	1960	–	–	–	–	–	–	–	–	–	–	–	–
	1..15.3-1DA4	1370	900	310	1960	–	–	–	–	–	–	–	–	–	–	–	–
	1..15.1-1DB2	–	–	–	–	1930	1340	870	2400	–	–	–	–	–	–	–	–
	1..15.1-1DB4	–	–	–	–	1840	1350	780	2410	–	–	–	–	–	–	–	–
	1..15.3-1DB2	–	–	–	–	1840	1350	780	2410	–	–	–	–	–	–	–	–
	1..15.1-1DB6	–	–	–	–	1760	1380	700	2440	–	–	–	–	–	–	–	–
	1..15.3-1DB4	–	–	–	–	1760	1380	700	2440	–	–	–	–	–	–	–	–
	1..15.1-1DB7	–	–	–	–	1640	1400	580	2460	–	–	–	–	–	–	–	–
	1..15.1-1DC2	–	–	–	–	–	–	–	–	2190	1700	1130	2760	–	–	–	–
	1..15.1-1DC4	–	–	–	–	–	–	–	–	2070	1710	1010	2770	–	–	–	–
	1..15.3-1DC2	–	–	–	–	–	–	–	–	2070	1710	1010	2770	–	–	–	–
	1..15.1-1DC6	–	–	–	–	–	–	–	–	1930	1720	870	2780	–	–	–	–
	1..15.3-1DC4	–	–	–	–	–	–	–	–	1930	1720	870	2780	–	–	–	–
	1..15.1-1DD2	–	–	–	–	–	–	–	–	–	–	–	–	2540	1990	1480	3050
	1..15.1-1DD3	–	–	–	–	–	–	–	–	–	–	–	–	2430	1980	1370	3040
	1..15.1-1DD4	–	–	–	–	–	–	–	–	–	–	–	–	2350	2000	1290	3060
180	**1..15..-1EA2**	1290	1220	530	1980	–	–	–	–	–	–	–	–	–	–	–	–
	1..15..-1EA6	1260	1230	500	1990	–	–	–	–	–	–	–	–	–	–	–	–
	1..15..-1EB2	–	–	–	–	1680	1750	920	2500	–	–	–	–	–	–	–	–
	1..15..-1EB4	–	–	–	–	1610	1760	850	2520	–	–	–	–	–	–	–	–
	1..15..-1EB6	–	–	–	–	1600	1770	840	2530	–	–	–	–	–	–	–	–
	1..15..-1EC4	–	–	–	–	–	–	–	–	1920	2120	1160	2880	–	–	–	–
	1..15..-1EC6	–	–	–	–	–	–	–	–	1920	2150	1160	2900	–	–	–	–
	1..15..-1ED4	–	–	–	–	–	–	–	–	–	–	–	–	2270	2440	1510	3200
	1..15..-1ED6	–	–	–	–	–	–	–	–	–	–	–	–	2050	2500	1290	3260
200	**1..15..-2AA4**	1920	1680	760	2830	–	–	–	–	–	–	–	–	–	–	–	–
	1..15..-2AA5	1810	1700	660	2860	–	–	–	–	–	–	–	–	–	–	–	–
	1..15..-2AA6	1810	1720	660	2870	–	–	–	–	–	–	–	–	–	–	–	–
	1..15..-2AB5	–	–	–	–	2410	2450	1260	3600	–	–	–	–				
	1..15..-2AB6	–	–	–	–	2410	2480	1260	3630	–	–	–	–				
	1..15..-2AC4	–	–	–	–	–	–	–	–	2880	2970	1720	4120	–	–	–	–
	1..15..-2AC5	–	–	–	–	–	–	–	–	2770	3010	1620	4160	–	–	–	–
	1..15..-2AC6	–	–	–	–	–	–	–	–	2700	3050	1550	4200	–	–	–	–
	1..15..-2AD5	–	–	–	–	–	–	–	–	–	–	–	–	3240	3450	2090	4600
	1..15..-2AD6	–	–	–	–	–	–	–	–	–	–	–	–	3060	3510	1910	4660

© Siemens AG 2015

Overview (continued)

Frame size	Type	3000 rpm				1500 rpm				1000 rpm				750 rpm			
		Shaft extension pointing															
		down		**up**		**down**		**up**		**down**		**up**		**down**		**up**	
		Load		Load		Load		Load		Load		Load		Load		Load	
		down	up	down	up	down	up	down	up	down	up	down	up	down	up	down	up
		N	N	N	N	N	N	N	N	N	N	N	N	N	N	N	N
225	**1..15..-2BA2**	1720	2000	630	3020	–	–	–	–	–	–	–	–	–	–	–	–
	1..15..-2BA6	1720	2000	630	3020	–	–	–	–	–	–	–	–	–	–	–	–
	1..15..-2BB0	–	–	–	–	2200	2800	1180	3830	–	–	–	–	–	–	–	–
	1..15..-2BB2	–	–	–	–	2100	2850	1070	3900	–	–	–	–	–	–	–	–
	1..15..-2BB6	–	–	–	–	2100	2850	1070	3900	–	–	–	–	–	–	–	–
	1..15..-2BC2	–	–	–	–	–	–	–	–	2340	3470	1300	4480	–	–	–	–
	1..15..-2BC6	–	–	–	–	–	–	–	–	2300	3500	1280	4480	–	–	–	–
	1..15..-2BD0	–	–	–	–	–	–	–	–	–	–	–	–	3200	3750	2180	4770
	1..15..-2BD2	–	–	–	–	–	–	–	–	–	–	–	–	3090	3800	2070	4820
	1..15..-2BD6	–	–	–	–	–	–	–	–	–	–	–	–	2780	3950	1770	4970
250	**1..15..-2CA2**	1630	2600	830	3400	–	–	–	–	–	–	–	–	–	–	–	–
	1..15..-2CA6	1630	2650	830	3450	–	–	–	–	–	–	–	–	–	–	–	–
	1..15..-2CB2	–	–	–	–	1980	3580	1180	4390	–	–	–	–	–	–	–	–
	1..15..-2CB6	–	–	–	–	1940	3740	1140	4530	–	–	–	–	–	–	–	–
	1..15..-2CC2	–	–	–	–	–	–	–	–	2440	4210	1650	5020	–	–	–	–
	1..15..-2CC6	–	–	–	–	–	–	–	–	2440	4320	1640	5120	–	–	–	–
	1..15..-2CD2	–	–	–	–	–	–	–	–	–	–	–	–	3180	4760	2380	5560
	1..15..-2CD6	–	–	–	–	–	–	–	–	–	–	–	–	2950	4850	2150	5650
280	**1..15..-2DA0**	3540	4280	1950	5850	–	–	–	–	–	–	–	–	–	–	–	–
	1..15..-2DA2	3250	4390	1650	5950	–	–	–	–	–	–	–	–	–	–	–	–
	1..15..-2DA6	3180	4540	1580	6100	–	–	–	–	–	–	–	–	–	–	–	–
	1..15..-2DB0	–	–	–	–	5320	6930	3640	8500	–	–	–	–	–	–	–	–
	1..15..-2DB2	–	–	–	–	4790	6990	3170	8580	–	–	–	–	–	–	–	–
	1..15..-2DB6	–	–	–	–	4770	7170	3150	8750	–	–	–	–	–	–	–	–
	1..15..-2DC0	–	–	–	–	–	–	–	–	6630	7990	5000	9570	–	–	–	–
	1..15..-2DC2	–	–	–	–	–	–	–	–	6350	8150	4700	9700	–	–	–	–
	1..15..-2DC6	–	–	–	–	–	–	–	–	6230	8400	4600	9900	–	–	–	–
	1..15..-2DD0	–	–	–	–	–	–	–	–	–	–	–	–	7930	9030	6200	10500
	1..15..-2DD2	–	–	–	–	–	–	–	–	–	–	–	–	7690	9180	6000	10600
	1..15..-2DD6	–	–	–	–	–	–	–	–	–	–	–	–	7370	9300	5700	10700
315	**1..15..-3AA0**	3580	4710	1450	6850	–	–	–	–	–	–	–	–	–	–	–	–
	1..15..-3AA2	3180	4960	1050	7100	–	–	–	–	–	–	–	–	–	–	–	–
	1..15..-3AA4	2890	5080	770	7200	–	–	–	–	–	–	–	–	–	–	–	–
	1..15..-3AA5	2240	5480	100	7600	–	–	–	–	–	–	–	–	–	–	–	–
	1..15..-3AB0	–	–	–	–	5640	7790	3600	9850	–	–	–	–	–	–	–	–
	1..15..-3AB2	–	–	–	–	4780	7920	2700	9900	–	–	–	–	–	–	–	–
	1..15..-3AB4	–	–	–	–	4820	7580	2750	9600	–	–	–	–	–	–	–	–
	1..15..-3AB5	–	–	–	–	3720	7620	1650	9650	–	–	–	–	–	–	–	–
	1..15..-3AC0	–	–	–	–	–	–	–	–	6800	9100	4700	11100	–	–	–	–
	1..15..-3AC2	–	–	–	–	–	–	–	–	6080	9300	4000	11300	–	–	–	–
	1..15..-3AC4	–	–	–	–	–	–	–	–	5400	9750	3350	11700	–	–	–	–
	1..15..-3AC5	–	–	–	–	–	–	–	–	4800	10150	2750	11800	–	–	–	–
	1..15..-3AC6	–	–	–	–	–	–	–	–	4550	10000	2500	11800	–	–	–	–
	1..15..-3AD0	–	–	–	–	–	–	–	–	–	–	–	–	8500	10150	6450	11800
	1..15..-3AD2	–	–	–	–	–	–	–	–	–	–	–	–	8150	10400	6100	11900
	1..15..-3AD4	–	–	–	–	–	–	–	–	–	–	–	–	7250	10650	5200	12000
	1..15..-3AD5	–	–	–	–	–	–	–	–	–	–	–	–	6500	10900	4450	12300
	1..15..-3AD6	–	–	–	–	–	–	–	–	–	–	–	–	5900	11000	3900	12500

© Siemens AG 2015

Overview (continued)

Frame size	Type	3000 rpm				1500 rpm				1000 rpm				750 rpm			
		Shaft extension pointing															
		down		**up**		**down**		**up**		**down**		**up**		**down**		**up**	
		Load down N	up N	Load down N	up N	Load down N	up N	Load down N	up N	Load down N	up N	Load down N	up N	Load down N	up N	Load down N	up N
1LE16, 1MB16 – Performance Line																	
100	**1..16.1-1AA4**	220	930	820	330	–	–	–	–	–	–	–	–	–	–	–	–
	1..16.1-1AA6	210	930	800	340	–	–	–	–	–	–	–	–	–	–	–	–
	1..16.3-1AA4	210	930	800	340	–	–	–	–	–	–	–	–	–	–	–	–
	1..16.1-1AB4	–	–	–	–	200	1330	1180	350	–	–	–	–	–	–	–	–
	1..16.1-1AB5	–	–	–	–	190	1320	1150	360	–	–	–	–	–	–	–	–
	1..16.1-1AB6	–	–	–	–	170	1320	1110	380	–	–	–	–	–	–	–	–
	1..16.3-1AB4	–	–	–	–	170	1320	1110	380	–	–	–	–	–	–	–	–
	1..16.3-1AB5	–	–	–	–	170	1320	1110	380	–	–	–	–	–	–	–	–
	1..16.1-1AC4	–	–	–	–	–	–	–	–	180	1640	1450	370	–	–	–	–
	1..16.1-1AC6	–	–	–	–	–	–	–	–	160	1640	1410	390	–	–	–	–
	1..16.1-1AD4	–	–	–	–	–	–	–	–	–	–	–	–	200	1900	1740	360
	1..16.1-1AD5	–	–	–	–	–	–	–	–	–	–	–	–	180	1900	1710	370
112	**1..16.1-1BA2**	200	940	790	350	–	–	–	–	–	–	–	–	–	–	–	–
	1..16.1-1BA6	180	940	750	370	–	–	–	–	–	–	–	–	–	–	–	–
	1..16.3-1BA2	180	940	750	370	–	–	–	–	–	–	–	–	–	–	–	–
	1..16.1-1BB2	–	–	–	–	180	1340	1150	370	–	–	–	–	–	–	–	–
	1..16.1-1BB6	–	–	–	–	170	1340	1120	390	–	–	–	–	–	–	–	–
	1..16.3-1BB2	–	–	–	–	170	1340	1120	390	–	–	–	–	–	–	–	–
	1..16.1-1BC2	–	–	–	–	–	–	–	–	170	1650	1440	380	–	–	–	–
	1..16.1-1BC6	–	–	–	–	–	–	–	–	160	1640	1410	390	–	–	–	–
	1..16.3-1BC2	–	–	–	–	–	–	–	–	160	1640	1410	390	–	–	–	–
	1..16.1-1BD2	–	–	–	–	–	–	–	–	–	–	–	–	170	1910	1700	380
132	**1..16.1-1CA0**	540	1120	890	770	–	–	–	–	–	–	–	–	–	–	–	–
	1..16.1-1CA1	520	1130	860	790	–	–	–	–	–	–	–	–	–	–	–	–
	1..16.3-1CA0	520	1130	860	790	–	–	–	–	–	–	–	–	–	–	–	–
	1..16.1-1CA6	480	1130	780	830	–	–	–	–	–	–	–	–	–	–	–	–
	1..16.3-1CA1	480	1130	780	830	–	–	–	–	–	–	–	–	–	–	–	–
	1..16.1-1CB0	–	–	–	–	520	1700	1430	790	–	–	–	–	–	–	–	–
	1..16.1-1CB2	–	–	–	–	490	1710	1380	820	–	–	–	–	–	–	–	–
	1..16.1-1CB6	–	–	–	–	440	1710	1280	870	–	–	–	–	–	–	–	–
	1..16.3-1CB0	–	–	–	–	440	1710	1280	870	–	–	–	–	–	–	–	–
	1..16.3-1CB2	–	–	–	–	440	1710	1280	870	–	–	–	–	–	–	–	–
	1..16.1-1CC0	–	–	–	–	–	–	–	–	520	2150	1880	790	–	–	–	–
	1..16.1-1CC2	–	–	–	–	–	–	–	–	500	2150	1840	810	–	–	–	–
	1..16.1-1CC3	–	–	–	–	–	–	–	–	470	2150	1780	840	–	–	–	–
	1..16.3-1CC0	–	–	–	–	–	–	–	–	470	2150	1780	840	–	–	–	–
	1..16.3-1CC2	–	–	–	–	–	–	–	–	470	2150	1780	840	–	–	–	–
	1..16.1-1CC6	–	–	–	–	–	–	–	–	420	2160	1690	890	–	–	–	–
	1..16.3-1CC3	–	–	–	–	–	–	–	–	420	2160	1690	890	–	–	–	–
	1..16.1-1CD0	–	–	–	–	–	–	–	–	–	–	–	–	510	2530	2240	800
	1..16.1-1CD2	–	–	–	–	–	–	–	–	–	–	–	–	480	2540	2180	840
160	**1..16.1-1DA2**	2200	1870	1480	2590	–	–	–	–	–	–	–	–	–	–	–	–
	1..16.1-1DA3	2150	1880	1430	2600	–	–	–	–	–	–	–	–	–	–	–	–
	1..16.3-1DA2	2150	1880	1430	2600	–	–	–	–	–	–	–	–	–	–	–	–
	1..16.1-1DA4	2120	1890	1400	2610	–	–	–	–	–	–	–	–	–	–	–	–
	1..16.3-1DA3	2120	1890	1400	2610	–	–	–	–	–	–	–	–	–	–	–	–
	1..16.1-1DA6	2020	1890	1300	2610	–	–	–	–	–	–	–	–	–	–	–	–
	1..16.3-1DA4	2020	1890	1300	2610	–	–	–	–	–	–	–	–	–	–	–	–
	1..16.1-1DB2	–	–	–	–	2860	2610	2140	3330	–	–	–	–	–	–	–	–
	1..16.1-1DB4	–	–	–	–	2760	2610	2040	3330	–	–	–	–	–	–	–	–
	1..16.3-1DB2	–	–	–	–	2760	2610	2040	3330	–	–	–	–	–	–	–	–
	1..16.1-1DB6	–	–	–	–	2680	2640	1960	3360	–	–	–	–	–	–	–	–
	1..16.3-1DB4	–	–	–	–	2680	2640	1960	3360	–	–	–	–	–	–	–	–
	1..16.1-1DB7	–	–	–	–	2570	2670	1850	3390	–	–	–	–	–	–	–	–
	1..16.1-1DC2	–	–	–	–	–	–	–	–	3320	3170	2600	3890	–	–	–	–
	1..16.1-1DC4	–	–	–	–	–	–	–	–	3200	3180	2480	3900	–	–	–	–
	1..16.3-1DC2	–	–	–	–	–	–	–	–	3200	3180	2480	3900	–	–	–	–
	1..16.1-1DC6	–	–	–	–	–	–	–	–	3050	3180	2330	3900	–	–	–	–
	1..16.3-1DC4	–	–	–	–	–	–	–	–	3050	3180	2330	3900	–	–	–	–
	1..16.1-1DD2	–	–	–	–	–	–	–	–	–	–	–	–	3830	3620	3110	4340
	1..16.1-1DD3	–	–	–	–	–	–	–	–	–	–	–	–	3730	3620	3010	4340
	1..16.1-1DD4	–	–	–	–	–	–	–	–	–	–	–	–	3650	3640	2930	4360

© Siemens AG 2015

Overview (continued)

Frame size	Type	3000 rpm				1500 rpm				1000 rpm				750 rpm			
		Shaft extension pointing															
		down		**up**		**down**		**up**		**down**		**up**		**down**		**up**	
		Load		Load		Load		Load		Load		Load		Load		Load	
		down N	up N	down N	up N	down N	up N	down N	up N	down N	up N	down N	up N	down N	up N	down N	up N
180	**1..16..-1EA2**	2510	2050	1360	3200	–	–	–	–	–	–	–	–	–	–	–	–
	1..16..-1EA6	2490	2060	1330	3220	–	–	–	–	–	–	–	–	–	–	–	–
	1..16..-1EB2	–	–	–	–	3240	2920	2090	4070	–	–	–	–	–	–	–	–
	1..16..-1EB4	–	–	–	–	3180	2930	2020	4090	–	–	–	–	–	–	–	–
	1..16..-1EB6	–	–	–	–	3160	2950	2010	4100	–	–	–	–	–	–	–	–
	1..16..-1EC4	–	–	–	–	–	–	–	–	3740	3560	2580	4710	–	–	–	–
	1..16..-1EC6	–	–	–	–	–	–	–	–	3740	3570	2580	4730	–	–	–	–
	1..16..-1ED4	–	–	–	–	–	–	–	–	–	–	–	–	4300	4090	3150	5240
	1..16..-1ED6	–	–	–	–	–	–	–	–	–	–	–	–	4090	4140	2940	5290
200	**1..16..-2AA4**	2920	3030	2110	3840	–	–	–	–	–	–	–	–	–	–	–	–
	1..16..-2AA5	2810	3060	2000	3870	–	–	–	–	–	–	–	–	–	–	–	–
	1..16..-2AA6	2810	3060	2000	3870	–	–	–	–	–	–	–	–	–	–	–	–
	1..16..-2AB5	–	–	–	–	3820	4210	3010	5020	–	–	–	–	–	–	–	–
	1..16..-2AB6	–	–	–	–	3820	4230	3010	5040	–	–	–	–	–	–	–	–
	1..16..-2AC4	–	–	–	–	–	–	–	–	4570	5010	3760	5820	–	–	–	–
	1..16..-2AC5	–	–	–	–	–	–	–	–	4470	5060	3660	5870	–	–	–	–
	1..16..-2AC6	–	–	–	–	–	–	–	–	4400	5090	3590	5900	–	–	–	–
	1..16..-2AD5	–	–	–	–	–	–	–	–	–	–	–	–	5200	5750	4390	6560
	1..16..-2AD6	–	–	–	–	–	–	–	–	–	–	–	–	5010	5800	4200	6610
225	**1..16..-2BA2**	3100	3400	2050	4450	–	–	–	–	–	–	–	–	–	–	–	–
	1..16..-2BA6	3100	3400	2050	4450	–	–	–	–	–	–	–	–	–	–	–	–
	1..16..-2BB0	–	–	–	–	4200	4750	3150	5800	–	–	–	–	–	–	–	–
	1..16..-2BB2	–	–	–	–	4100	4850	3000	5850	–	–	–	–	–	–	–	–
	1..16..-2BB6	–	–	–	–	4100	4850	3000	5850	–	–	–	–	–	–	–	–
	1..16..-2BC2	–	–	–	–	–	–	–	–	4700	5800	3650	6850	–	–	–	–
	1..16..-2BC6	–	–	–	–	–	–	–	–	4650	5850	3600	6900	–	–	–	–
	1..16..-2BD0	–	–	–	–	–	–	–	–	–	–	–	–	5900	6400	4850	7650
	1..16..-2BD2	–	–	–	–	–	–	–	–	–	–	–	–	5800	6450	4700	7500
	1..16..-2BD6	–	–	–	–	–	–	–	–	–	–	–	–	5500	6600	4400	7650
250	**1..16..-2CA2**	3850	4100	2250	5600	–	–	–	–	–	–	–	–	–	–	–	–
	1..16..-2CA6	3850	4100	2250	5600	–	–	–	–	–	–	–	–	–	–	–	–
	1..16..-2CB2	–	–	–	–	4850	5650	3250	7250	–	–	–	–	–	–	–	–
	1..16..-2CB6	–	–	–	–	4800	5750	3200	7400	–	–	–	–	–	–	–	–
	1..16..-2CC2	–	–	–	–	–	–	–	–	5750	6750	4200	8350	–	–	–	–
	1..16..-2CC6	–	–	–	–	–	–	–	–	5750	6750	4200	8450	–	–	–	–
	1..16..-2CD2	–	–	–	–	–	–	–	–	–	–	–	–	6900	7700	5300	9200
	1..16..-2CD6	–	–	–	–	–	–	–	–	–	–	–	–	6700	7800	5000	9300
280	**1..16..-2DA0**	3540	4280	1950	5850	–	–	–	–	–	–	–	–	–	–	–	–
	1..16..-2DA2	3250	4390	1650	5950	–	–	–	–	–	–	–	–	–	–	–	–
	1..16..-2DA6	3180	4540	1580	6100	–	–	–	–	–	–	–	–	–	–	–	–
	1..16..-2DB0	–	–	–	–	5320	6930	3640	8500	–	–	–	–	–	–	–	–
	1..16..-2DB2	–	–	–	–	4790	6990	3170	8580	–	–	–	–	–	–	–	–
	1..16..-2DB6	–	–	–	–	4770	7170	3150	8750	–	–	–	–	–	–	–	–
	1..16..-2DC0	–	–	–	–	–	–	–	–	6630	7990	5000	9570	–	–	–	–
	1..16..-2DC2	–	–	–	–	–	–	–	–	6350	8150	4700	9700	–	–	–	–
	1..16..-2DC6	–	–	–	–	–	–	–	–	6230	8400	4600	9900	–	–	–	–
	1..16..-2DD0	–	–	–	–	–	–	–	–	–	–	–	–	7930	9030	6200	10500
	1..16..-2DD2	–	–	–	–	–	–	–	–	–	–	–	–	7690	9180	6000	10600
	1..16..-2DD6	–	–	–	–	–	–	–	–	–	–	–	–	7370	9300	5700	10700
315	**1..16..-3AA0**	3580	4710	1450	6850	–	–	–	–	–	–	–	–	–	–	–	–
	1..16..-3AA2	3180	4960	1050	7100	–	–	–	–	–	–	–	–	–	–	–	–
	1..16..-3AA4	2890	5080	770	7200	–	–	–	–	–	–	–	–	–	–	–	–
	1..16..-3AA5	2240	5480	100	7600	–	–	–	–	–	–	–	–	–	–	–	–
	1..16..-3AB0	–	–	–	–	5640	7790	3600	9850	–	–	–	–	–	–	–	–
	1..16..-3AB2	–	–	–	–	4780	7920	2700	9900	–	–	–	–	–	–	–	–
	1..16..-3AB4	–	–	–	–	4820	7580	2750	9600	–	–	–	–	–	–	–	–
	1..16..-3AB5	–	–	–	–	3720	7620	1650	9650	–	–	–	–	–	–	–	–
	1..16..-3AC0	–	–	–	–	–	–	–	–	6800	9100	4700	11100	–	–	–	–
	1..16..-3AC2	–	–	–	–	–	–	–	–	6080	9300	4000	11300	–	–	–	–
	1..16..-3AC4	–	–	–	–	–	–	–	–	5400	9750	3350	11700	–	–	–	–
	1..16..-3AC5	–	–	–	–	–	–	–	–	4800	10150	2750	11800	–	–	–	–
	1..16..-3AC6	–	–	–	–	–	–	–	–	4550	10000	2500	11800	–	–	–	–
	1..16..-3AD0	–	–	–	–	–	–	–	–	–	–	–	–	8500	10150	6450	11800
	1..16..-3AD2	–	–	–	–	–	–	–	–	–	–	–	–	8150	10400	6100	11900
	1..16..-3AD4	–	–	–	–	–	–	–	–	–	–	–	–	7250	10650	5200	12000
	1..16..-3AD5	–	–	–	–	–	–	–	–	–	–	–	–	6500	10900	4450	12300
	1..16..-3AD6	–	–	–	–	–	–	–	–	–	–	–	–	5900	11000	3900	12500

© Siemens AG 2015

Overview (continued)

1LE15 and 1MB15 motors in vertical type of construction – Deep-groove bearings reinforced at both ends – Order code **L25**

Frame size	Type	3000 rpm				1500 rpm				1000 rpm				750 rpm			
		Shaft extension pointing															
		down		**up**		**down**		**up**		**down**		**up**		**down**		**up**	
		Load		Load		Load		Load		Load		Load		Load		Load	
		down	up	down	up	down	up	down	up	down	up	down	up	down	up	down	up
		N	N	N	N	N	N	N	N	N	N	N	N	N	N	N	N
1LE15, 1MB15 – Basic Line																	
71/80/90		Available soon															
100	**1..15.1-1AA4**	220	930	820	330	–	–	–	–	–	–	–	–	–	–	–	–
	1..15.1-1AA6	210	930	800	340	–	–	–	–	–	–	–	–	–	–	–	–
	1..15.3-1AA4	210	930	800	340	–	–	–	–	–	–	–	–	–	–	–	–
	1..15.1-1AB4	–	–	–	–	200	1330	1180	350	–	–	–	–	–	–	–	–
	1..15.1-1AB5	–	–	–	–	190	1320	1150	360	–	–	–	–	–	–	–	–
	1..15.1-1AB6	–	–	–	–	170	1320	1110	380	–	–	–	–	–	–	–	–
	1..15.3-1AB4	–	–	–	–	170	1320	1110	380	–	–	–	–	–	–	–	–
	1..15.3-1AB5	–	–	–	–	170	1320	1110	380	–	–	–	–	–	–	–	–
	1..15.1-1AC4	–	–	–	–	–	–	–	–	180	1640	1450	370	–	–	–	–
	1..15.1-1AC6	–	–	–	–	–	–	–	–	160	1640	1410	390	–	–	–	–
	1..15.1-1AD4	–	–	–	–	–	–	–	–	–	–	–	–	200	1900	1740	360
	1..15.1-1AD5	–	–	–	–	–	–	–	–	–	–	–	–	180	1900	1710	370
112	**1..15.1-1BA2**	200	940	790	350	–	–	–	–	–	–	–	–	–	–	–	–
	1..15.1-1BA6	180	940	750	370	–	–	–	–	–	–	–	–	–	–	–	–
	1..15.3-1BA2	180	940	750	370	–	–	–	–	–	–	–	–	–	–	–	–
	1..15.1-1BB2	–	–	–	–	180	1340	1150	370	–	–	–	–	–	–	–	–
	1..15.1-1BB6	–	–	–	–	170	1340	1120	390	–	–	–	–	–	–	–	–
	1..15.3-1BB2	–	–	–	–	170	1340	1120	390	–	–	–	–	–	–	–	–
	1..15.1-1BC2	–	–	–	–	–	–	–	–	170	1650	1440	380	–	–	–	–
	1..15.1-1BC6	–	–	–	–	–	–	–	–	160	1640	1410	390	–	–	–	–
	1..15.3-1BC2	–	–	–	–	–	–	–	–	160	1640	1410	390	–	–	–	–
	1..15.1-1BD2	–	–	–	–	–	–	–	–	–	–	–	–	170	1910	1700	380
132	**1..15.1-1CA0**	540	1120	890	770	–	–	–	–	–	–	–	–	–	–	–	–
	1..15.1-1CA1	520	1130	860	790	–	–	–	–	–	–	–	–	–	–	–	–
	1..15.3-1CA0	520	1130	860	790	–	–	–	–	–	–	–	–	–	–	–	–
	1..15.1-1CA6	480	1130	780	830	–	–	–	–	–	–	–	–	–	–	–	–
	1..15.3-1CA1	480	1130	780	830	–	–	–	–	–	–	–	–	–	–	–	–
	1..15.1-1CB0	–	–	–	–	520	1700	1430	790	–	–	–	–	–	–	–	–
	1..15.1-1CB2	–	–	–	–	490	1710	1380	820	–	–	–	–	–	–	–	–
	1..15.1-1CB6	–	–	–	–	440	1710	1280	870	–	–	–	–	–	–	–	–
	1..15.3-1CB0	–	–	–	–	440	1710	1280	870	–	–	–	–	–	–	–	–
	1..15.3-1CB2	–	–	–	–	440	1710	1280	870	–	–	–	–	–	–	–	–
	1..15.1-1CC0	–	–	–	–	–	–	–	–	520	2150	1880	790	–	–	–	–
	1..15.1-1CC2	–	–	–	–	–	–	–	–	500	2150	1840	810	–	–	–	–
	1..15.1-1CC3	–	–	–	–	–	–	–	–	470	2150	1780	840	–	–	–	–
	1..15.3-1CC0	–	–	–	–	–	–	–	–	470	2150	1780	840	–	–	–	–
	1..15.3-1CC2	–	–	–	–	–	–	–	–	470	2150	1780	840	–	–	–	–
	1..15.1-1CC6	–	–	–	–	–	–	–	–	420	2160	1690	890	–	–	–	–
	1..15.3-1CC3	–	–	–	–	–	–	–	–	420	2160	1690	890	–	–	–	–
	1..15.1-1CD0	–	–	–	–	–	–	–	–	–	–	–	–	510	2530	2240	800
	1..15.1-1CD2	–	–	–	–	–	–	–	–	–	–	–	–	480	2540	2180	840
160	**1..15.1-1DA2**	2200	1870	1480	2590	–	–	–	–	–	–	–	–	–	–	–	–
	1..15.1-1DA3	2150	1880	1430	2600	–	–	–	–	–	–	–	–	–	–	–	–
	1..15.3-1DA2	2150	1880	1430	2600	–	–	–	–	–	–	–	–	–	–	–	–
	1..15.1-1DA4	2120	1890	1400	2610	–	–	–	–	–	–	–	–	–	–	–	–
	1..15.3-1DA3	2120	1890	1400	2610	–	–	–	–	–	–	–	–	–	–	–	–
	1..15.1-1DA6	2020	1890	1300	2610	–	–	–	–	–	–	–	–	–	–	–	–
	1..15.3-1DA4	2020	1890	1300	2610	–	–	–	–	–	–	–	–	–	–	–	–
	1..15.1-1DB2	–	–	–	–	2860	2610	2140	3330	–	–	–	–	–	–	–	–
	1..15.1-1DB4	–	–	–	–	2760	2610	2040	3330	–	–	–	–	–	–	–	–
	1..15.3-1DB2	–	–	–	–	2760	2610	2040	3330	–	–	–	–	–	–	–	–
	1..15.1-1DB6	–	–	–	–	2680	2640	1960	3360	–	–	–	–	–	–	–	–
	1..15.3-1DB4	–	–	–	–	2680	2640	1960	3360	–	–	–	–	–	–	–	–
	1..15.1-1DB7	–	–	–	–	2570	2670	1850	3390	–	–	–	–	–	–	–	–
	1..15.1-1DC2	–	–	–	–	–	–	–	–	3320	3170	2600	3890	–	–	–	–
	1..15.1-1DC4	–	–	–	–	–	–	–	–	3200	3180	2480	3900	–	–	–	–
	1..15.3-1DC2	–	–	–	–	–	–	–	–	3200	3180	2480	3900	–	–	–	–
	1..15.1-1DC6	–	–	–	–	–	–	–	–	3050	3180	2330	3900	–	–	–	–
	1..15.3-1DC4	–	–	–	–	–	–	–	–	3050	3180	2330	3900	–	–	–	–
	1..15.1-1DD2	–	–	–	–	–	–	–	–	–	–	–	–	3830	3620	3110	4340
	1..15.1-1DD3	–	–	–	–	–	–	–	–	–	–	–	–	3730	3620	3010	4340
	1..15.1-1DD4	–	–	–	–	–	–	–	–	–	–	–	–	3650	3640	2930	4360

© Siemens AG 2015

Overview (continued)

Frame size	Type	3000 rpm				1500 rpm				1000 rpm				750 rpm			
		Shaft extension pointing															
		down		**up**		**down**		**up**		**down**		**up**		**down**		**up**	
		Load		Load		Load		Load		Load		Load		Load		Load	
		down N	up N	down N	up N	down N	up N	down N	up N	down N	up N	down N	up N	down N	up N	down N	up N
180	**1..15..-1EA2**	2510	2050	1360	3200	–	–	–	–	–	–	–	–	–	–	–	–
	1..15..-1EA6	2490	2060	1330	3220	–	–	–	–	–	–	–	–	–	–	–	–
	1..15..-1EB2	–	–	–	–	3240	2920	2090	4070	–	–	–	–	–	–	–	–
	1..15..-1EB4	–	–	–	–	3180	2930	2020	4090	–	–	–	–	–	–	–	–
	1..15..-1EB6	–	–	–	–	3160	2950	2010	4100	–	–	–	–	–	–	–	–
	1..15..-1EC4	–	–	–	–	–	–	–	–	3740	3560	2580	4710	–	–	–	–
	1..15..-1EC6	–	–	–	–	–	–	–	–	3740	3570	2580	4730	–	–	–	–
	1..15..-1ED4	–	–	–	–	–	–	–	–	–	–	–	–	4300	4090	3150	5240
	1..15..-1ED6	–	–	–	–	–	–	–	–	–	–	–	–	4090	4140	2940	5290
200	**1..15..-2AA4**	2920	3030	2110	3840	–	–	–	–	–	–	–	–	–	–	–	–
	1..15..-2AA5	2810	3060	2000	3870	–	–	–	–	–	–	–	–	–	–	–	–
	1..15..-2AA6	2810	3060	2000	3870	–	–	–	–	–	–	–	–	–	–	–	–
	1..15..-2AB5	–	–	–	–	3820	4210	3010	5020	–	–	–	–	–	–	–	–
	1..15..-2AB6	–	–	–	–	3820	4230	3010	5040	–	–	–	–	–	–	–	–
	1..15..-2AC4	–	–	–	–	–	–	–	–	4570	5010	3760	5820	–	–	–	–
	1..15..-2AC5	–	–	–	–	–	–	–	–	4470	5060	3660	5870	–	–	–	–
	1..15..-2AC6	–	–	–	–	–	–	–	–	4400	5090	3590	5900	–	–	–	–
	1..15..-2AD5	–	–	–	–	–	–	–	–	–	–	–	–	5200	5750	4390	6560
	1..15..-2AD6	–	–	–	–	–	–	–	–	–	–	–	–	5010	5800	4200	6610
225	**1..15..-2BA2**	3100	3400	2050	4450	–	–	–	–	–	–	–	–	–	–	–	–
	1..15..-2BA6	3100	3400	2050	4450	–	–	–	–	–	–	–	–	–	–	–	–
	1..15..-2BB0	–	–	–	–	4200	4750	3150	5800	–	–	–	–	–	–	–	–
	1..15..-2BB2	–	–	–	–	4100	4850	3000	5850	–	–	–	–	–	–	–	–
	1..15..-2BB6	–	–	–	–	4100	4850	3000	5850	–	–	–	–	–	–	–	–
	1..15..-2BC2	–	–	–	–	–	–	–	–	4700	5800	3650	6850	–	–	–	–
	1..15..-2BC6	–	–	–	–	–	–	–	–	4650	5850	3600	6900	–	–	–	–
	1..15..-2BD0	–	–	–	–	–	–	–	–	–	–	–	–	5900	6400	4850	7650
	1..15..-2BD2	–	–	–	–	–	–	–	–	–	–	–	–	5800	6450	4700	7500
	1..15..-2BD6	–	–	–	–	–	–	–	–	–	–	–	–	5500	6600	4400	7650
250	**1..15..-2CA2**	3850	4100	2250	5600	–	–	–	–	–	–	–	–	–	–	–	–
	1..15..-2CA6	3850	4100	2250	5600	–	–	–	–	–	–	–	–	–	–	–	–
	1..15..-2CB2	–	–	–	–	4850	5650	3250	7250	–	–	–	–	–	–	–	–
	1..15..-2CB6	–	–	–	–	4800	5750	3200	7400	–	–	–	–	–	–	–	–
	1..15..-2CC2	–	–	–	–	–	–	–	–	5750	6750	4200	8350	–	–	–	–
	1..15..-2CC6	–	–	–	–	–	–	–	–	5750	6750	4200	8450	–	–	–	–
	1..15..-2CD2	–	–	–	–	–	–	–	–	–	–	–	–	6900	7700	5300	9200
	1..15..-2CD6	–	–	–	–	–	–	–	–	–	–	–	–	6700	7800	5000	9300

For frame sizes > 250 standard version.

© Siemens AG 2015

Overview (continued)

1LE15, 1MB15, 1LE16 and 1MB16 motors in horizontal type of construction – Basic version

Frame size	Type	3000 rpm		1500 rpm		1000 rpm		750 rpm		Type	3000 rpm		1500 rpm		1000 rpm		750 rpm	
		Load		Load		Load		Load			Load		Load		Load		Load	
		Tension	Thrust	Tension	Thrust	Tension	Thrust	Tension	Thrust		Tension	Thrust	Tension	Thrust	Tension	Thrust	Tension	Thrust
		N	N	N	N	N	N	N	N		N	N	N	N	N	N	N	N
1LE15, 1MB15 – Basic Line										**1LE16, 1MB16 – Performance Line**								
71	**1..1501-0CA2**	230	90	–	–	–	–	–	–	–	–	–	–	–	–	–	–	–
	1..1501-0CA3	230	80	–	–	–	–	–	–	–	–	–	–	–	–	–	–	–
	1..1503-0CA2	230	80	–	–	–	–	–	–	–	–	–	–	–	–	–	–	–
	1..1503-0CA3	230	80	–	–	–	–	–	–	–	–	–	–	–	–	–	–	–
	1..1501-0CB2	–	–	230	200	–	–	–	–	–	–	–	–	–	–	–	–	–
	1..1501-0CB3	–	–	230	190	–	–	–	–	–	–	–	–	–	–	–	–	–
	1..1503-0CB2	–	–	230	190	–	–	–	–	–	–	–	–	–	–	–	–	–
	1..1503-0CB3	–	–	230	180	–	–	–	–	–	–	–	–	–	–	–	–	–
	1..1501-0CC2	–	–	–	–	230	280	–	–	–	–	–	–	–	–	–	–	–
	1..1501-0CC3	–	–	–	–	230	280	–	–	–	–	–	–	–	–	–	–	–
	1..1503-0CC2	–	–	–	–	230	280	–	–	–	–	–	–	–	–	–	–	–
	1..1503-0CC3	–	–	–	–	230	260	–	–	–	–	–	–	–	–	–	–	–
80	**1..1501-0DA2**	260	260	–	–	–	–	–	–	–	–	–	–	–	–	–	–	–
	1..1501-0DA3	260	250	–	–	–	–	–	–	–	–	–	–	–	–	–	–	–
	1..1503-0DA2	260	250	–	–	–	–	–	–	–	–	–	–	–	–	–	–	–
	1..1503-0DA3	260	240	–	–	–	–	–	–	–	–	–	–	–	–	–	–	–
	1..1501-0DB2	–	–	260	430	–	–	–	–	–	–	–	–	–	–	–	–	–
	1..1501-0DB3	–	–	260	420	–	–	–	–	–	–	–	–	–	–	–	–	–
	1..1503-0DB2	–	–	260	420	–	–	–	–	–	–	–	–	–	–	–	–	–
	1..1503-0DB3	–	–	260	400	–	–	–	–	–	–	–	–	–	–	–	–	–
	1..1501-0DC2	–	–	–	–	260	570	–	–	–	–	–	–	–	–	–	–	–
	1..1501-0DC3	–	–	–	–	260	550	–	–	–	–	–	–	–	–	–	–	–
	1..1503-0DC2	–	–	–	–	260	550	–	–	–	–	–	–	–	–	–	–	–
	1..1503-0DC3	–	–	–	–	260	540	–	–	–	–	–	–	–	–	–	–	–
90	**1..1501-0EA0**	250	270	–	–	–	–	–	–	–	–	–	–	–	–	–	–	–
	1..1501-0EA4	250	260	–	–	–	–	–	–	–	–	–	–	–	–	–	–	–
	1..1503-0EA0	250	260	–	–	–	–	–	–	–	–	–	–	–	–	–	–	–
	1..1503-0EA4	250	250	–	–	–	–	–	–	–	–	–	–	–	–	–	–	–
	1..1501-0EB0	–	–	250	440	–	–	–	–	–	–	–	–	–	–	–	–	–
	1..1501-0EB4	–	–	250	430	–	–	–	–	–	–	–	–	–	–	–	–	–
	1..1503-0EB0	–	–	250	430	–	–	–	–	–	–	–	–	–	–	–	–	–
	1..1503-0EB4	–	–	250	410	–	–	–	–	–	–	–	–	–	–	–	–	–
	1..1501-0EC0	–	–	–	–	250	580	–	–	–	–	–	–	–	–	–	–	–
	1..1501-0EC4	–	–	–	–	250	570	–	–	–	–	–	–	–	–	–	–	–
	1..1503-0EC0	–	–	–	–	250	570	–	–	–	–	–	–	–	–	–	–	–
	1..1503-0EC4	–	–	–	–	250	560	–	–	–	–	–	–	–	–	–	–	–
100	**1..15.1-1AA4**	1120	400	–	–	–	–	–	–	**1..16.1-1AA4**	1440	880	–	–	–	–	–	–
	1..15.1-1AA6	1000	380	–	–	–	–	–	–	**1..16.1-1AA6**	1430	870	–	–	–	–	–	–
	1..15.3-1AA4	1000	380	–	–	–	–	–	–	**1..16.3-1AA4**	1430	870	–		–	–	–	–
	1..15.1-1AB4	–	–	1370	650	–	–	–	–	**1..16.1-1AB4**	–	–	1820	1260	–	–	–	–
	1..15.1-1AB5	–	–	1350	630	–	–	–	–	**1..16.1-1AB5**	–	–	1800	1240	–	–	–	–
	1..15.1-1AB6	–	–	1330	610	–	–	–	–	**1..16.1-1AB6**	–	–	1780	1220	–	–	–	–
	1..15.3-1AB4	–	–	1330	610	–	–	–	–	**1..16.3-1AB4**	–	–	1780	1220	–	–	–	–
	1..15.3-1AB5	–	–	1330	610	–	–	–	–	**1..16.3-1AB5**	–	–	1780	1220	–	–	–	–
	1..15.1-1AC4	–	–	–	–	1560	840	–	–	**1..16.1-1AC4**	–	–	–	–	2110	1550	–	–
	1..15.1-1AC6	–	–	–	–	1530	810	–	–	**1..16.1-1AC6**	–	–	–	–	2090	1530	–	–
	1..15.1-1AD4	–	–	–	–	–	–	1740	1020	**1..16.1-1AD4**	–	–	–	–	–	–	2380	1820
	1..15.1-1AD5	–	–	–	–	–	–	1730	1010	**1..16.1-1AD5**	–	–	–	–	–	–	2370	1810
112	**1..15.1-1BA2**	1110	390	–	–	–	–	–	–	**1..16.1-1BA2**	1430	870	–	–	–	–	–	–
	1..15.1-1BA6	1090	370	–	–	–	–	–	–	**1..16.1-1BA6**	1410	850	–	–	–	–	–	–
	1..15.3-1BA2	1090	370	–	–	–	–	–	–	**1..16.3-1BA2**	1410	850	–	–	–	–	–	–
	1..15.1-1BB2	–	–	1360	640	–	–	–	–	**1..16.1-1BB2**	–	–	1810	1250	–	–	–	–
	1..15.1-1BB6	–	–	1340	620	–	–	–	–	**1..16.1-1BB6**	–	–	1790	1230	–	–	–	–
	1..15.3-1BB2	–	–	1340	620	–	–	–	–	**1..16.3-1BB2**	–	–	1790	1230	–	–	–	–
	1..15.1-1BC2	–	–	–	–	1560	840	–	–	**1..16.1-1BC2**	–	–	–	–	2110	1550	–	–
	1..15.1-1BC6	–	–	–	–	1540	820	–	–	**1..16.1-1BC6**	–	–	–	–	2090	1530	–	–
	1..15.3-1BC2	–	–	–	–	1540	820	–	–	**1..16.3-1BC2**	–	–	–	–	2090	1530	–	–
	1..15.1-1BD2	–	–	–	–	–	–	1730	1010	**1..16.1-1BD2**	–	–	–	–	–	–	2370	1810

© Siemens AG 2015

Overview (continued)

1LE15, 1MB15, 1LE16 and 1MB16 motors in horizontal type of construction – Basic version

Frame size	Type	3000 rpm		1500 rpm		1000 rpm		750 rpm		Type	3000 rpm		1500 rpm		1000 rpm		750 rpm	
		Load		Load		Load		Load			Load		Load		Load		Load	
		Tension	Thrust	Tension	Thrust	Tension	Thrust	Tension	Thrust		Tension	Thrust	Tension	Thrust	Tension	Thrust	Tension	Thrust
		N	N	N	N	N	N	N	N		N	N	N	N	N	N	N	N
1LE15, 1MB15 – Basic Line										**1LE16, 1MB16 – Performance Line**								
132	**1..15.1-1CA0**	1750	490	–	–	–	–	–	–	**1..16.1-1CA0**	2330	1010	–	–	–	–	–	–
	1..15.1-1CA1	1740	480	–	–	–	–	–	–	**1..16.1-1CA1**	2320	1000	–	–	–	–	–	–
	1..15.3-1CA0	1740	480	–	–	–	–	–	–	**1..16.3-1CA0**	2320	1000	–	–	–	–	–	–
	1..15.1-1CA6	1700	440	–	–	–	–	–	–	**1..16.1-1CA6**	2280	960	–	–	–	–	–	–
	1..15.3-1CA1	1700	440	–	–	–	–	–	–	**1..16.3-1CA1**	2280	960	–	–	–	–	–	–
	1..15.1-1CB0	–	–	2130	870	–	–	–	–	**1..16.1-1CB0**	–	–	2890	1570	–	–	–	–
	1..15.1-1CB2	–	–	2100	840	–	–	–	–	**1..16.1-1CB2**	–	–	2870	1550	–	–	–	–
	1..15.1-1CB6	–	–	2060	800	–	–	–	–	**1..16.1-1CB6**	–	–	2820	1500	–	–	–	–
	1..15.3-1CB0	–	–	2060	800	–	–	–	–	**1..16.3-1CB0**	–	–	2820	1500	–	–	–	–
	1..15.3-1CB2	–	–	2060	800	–	–	–	–	**1..16.3-1CB2**	–	–	2820	1500	–	–	–	–
	1..15.1-1CC0	–	–	–	–	2440	1180	–	–	**1..16.1-1CC0**	–	–	–	–	3340	2020	–	–
	1..15.1-1CC2	–	–	–	–	2420	1160	–	–	**1..16.1-1CC2**	–	–	–	–	3320	2000	–	–
	1..15.1-1CC3	–	–	–	–	2390	1130	–	–	**1..16.1-1CC3**	–	–	–	–	3290	1970	–	–
	1..15.3-1CC0	–	–	–	–	2390	1130	–	–	**1..16.3-1CC0**	–	–	–	–	3290	1970	–	–
	1..15.3-1CC2	–	–	–	–	2390	1130	–	–	**1..16.3-1CC2**	–	–	–	–	3290	1970	–	–
	1..15.1-1CC6	–	–	–	–	2350	1090	–	–	**1..16.1-1CC6**	–	–	–	–	3250	1930	–	–
	1..15.3-1CC3	–	–	–	–	2350	1090	–	–	**1..16.3-1CC3**	–	–	–	–	3250	1930	–	–
	1..15.1-1CD0	–	–	–	–	–	–	2690	1430	**1..16.1-1CD0**	–	–	–	–	–	–	3710	2390
	1..15.1-1CD2	–	–	–	–	–	–	2660	1400	**1..16.1-1CD2**	–	–	–	–	–	–	3680	2360
160	**1..15.1-1DA2**	1760	700	–	–	–	–	–	–	**1..16.1-1DA2**	2400	1680	–	–	–	–	–	–
	1..15.1-1DA3	1740	680	–	–	–	–	–	–	**1..16.1-1DA3**	2380	1660	–	–	–	–	–	–
	1..15.3-1DA2	1740	680	–	–	–	–	–	–	**1..16.3-1DA2**	2380	1660	–	–	–	–	–	–
	1..15.1-1DA4	1720	660	–	–	–	–	–	–	**1..16.1-1DA4**	2370	1650	–	–	–	–	–	–
	1..15.3-1DA3	1720	660	–	–	–	–	–	–	**1..16.3-1DA3**	2370	1650	–	–	–	–	–	–
	1..15.1-1DA6	1670	610	–	–	–	–	–	–	**1..16.1-1DA6**	2320	1600	–	–	–	–	–	–
	1..15.3-1DA4	1670	610	–	–	–	–	–	–	**1..16.3-1DA4**	2320	1600	–	–	–	–	–	–
	1..15.1-1DB2	–	–	2170	1110	–	–	–	–	**1..16.1-1DB2**	–	–	3100	2380	–	–	–	–
	1..15.1-1DB4	–	–	2130	1070	–	–	–	–	**1..16.1-1DB4**	–	–	3050	2330	–	–	–	–
	1..15.3-1DB2	–	–	2130	1070	–	–	–	–	**1..16.3-1DB2**	–	–	3050	2330	–	–	–	–
	1..15.1-1DB6	–	–	2100	1040	–	–	–	–	**1..16.1-1DB6**	–	–	3020	2300	–	–	–	–
	1..15.3-1DB4	–	–	2100	1040	–	–	–	–	**1..16.3-1DB4**	–	–	3020	2300	–	–	–	–
	1..15.1-1DB7	–	–	2050	990	–	–	–	–	**1..16.1-1DB7**	–	–	2980	2260	–	–	–	–
	1..15.1-1DC2	–	–	–	–	2480	1420	–	–	**1..16.1-1DC2**	–	–	–	–	3610	2890	–	–
	1..15.1-1DC4	–	–	–	–	2420	1360	–	–	**1..16.1-1DC4**	–	–	–	–	3550	2830	–	–
	1..15.3-1DC2	–	–	–	–	2420	1360	–	–	**1..16.3-1DC2**	–	–	–	–	3550	2830	–	–
	1..15.1-1DC6	–	–	–	–	2360	1300	–	–	**1..16.1-1DC6**	–	–	–	–	3480	2760	–	–
	1..15.3-1DC4	–	–	–	–	2360	1300	–	–	**1..16.3-1DC4**	–	–	–	–	3480	2760	–	–
	1..15.1-1DD2	–	–	–	–	–	–	2800	1740	**1..16.1-1DD2**	–	–	–	–	–	–	4090	3370
	1..15.1-1DD3	–	–	–	–	–	–	2740	1680	**1..16.1-1DD3**	–	–	–	–	–	–	4040	3320
	1..15.1-1DD4	–	–	–	–	–	–	2710	1650	**1..16.1-1DD4**	–	–	–	–	–	–	4010	3290
180	**1..15..-1EA2**	1640	880	–	–	–	–	–	–	**1..16..-1EA2**	2860	1710	–	–	–	–	–	–
	1..15..-1EA6	1630	870	–	–	–	–	–	–	**1..16..-1EA6**	2850	1700	–	–	–	–	–	–
	1..15..-1EB2	–	–	2100	1340	–	–			**1..16..-1EB2**	–	–	3660	2510	–	–	–	–
	1..15..-1EB4	–	–	2070	1310	–	–			**1..16..-1EB4**	–	–	3630	2480	–	–	–	–
	1..15..-1EB6	–	–	2070	1310	–	–			**1..16..-1EB6**	–	–	3630	2480	–	–	–	–
	1..15..-1EC4	–	–	–	–	2420	1660	–	–	**1..16..-1EC4**	–	–	–	–	4230	3080	–	–
	1..15..-1EC6	–	–	–	–	2420	1660	–	–	**1..16..-1EC6**	–	–	–	–	4230	3080	–	–
	1..15..-1ED4	–	–	–	–	–	–	2740	1980	**1..16..-1ED4**	–	–	–	–	–	–	4770	3620
	1..15..-1ED6	–	–	–	–	–	–	2660	1900	**1..16..-1ED6**	–	–	–	–	–	–	4690	3540
200	**1..15..-2AA4**	2380	1230	–	–	–	–	–	–	**1..16..-2AA4**	3390	2580	–	–	–	–	–	–
	1..15..-2AA5	2340	1190	–	–	–	–	–	–	**1..16..-2AA5**	3340	2530	–	–	–	–	–	–
	1..15..-2AA6	2340	1190	–	–	–	–	–	–	**1..16..-2AA6**	3340	2530	–	–	–	–	–	–
	1..15..-2AB5	–	–	3020	1870	–	–			**1..16..-2AB5**	–	–	4430	3620	–	–	–	–
	1..15..-2AB6	–	–	3020	1870	–	–			**1..16..-2AB6**	–	–	4430	3620	–	–	–	–
	1..15..-2AC4	–	–	–	–	3510	2360	–	–	**1..16..-2AC4**	–	–	–	–	5210	4400	–	–
	1..15..-2AC5	–	–	–	–	3470	2320	–	–	**1..16..-2AC5**	–	–	–	–	5170	4360	–	–
	1..15..-2AC6	–	–	–	–	3450	2300	–	–	**1..16..-2AC6**	–	–	–	–	5150	4340	–	–
	1..15..-2AD5	–	–	–	–	–	–	3920	2770	**1..16..-2AD5**	–	–	–	–	–	–	5880	5070
	1..15..-2AD6	–	–	–	–	–	–	3860	2710	**1..16..-2AD6**	–	–	–	–	–	–	5810	5000

© Siemens AG 2015

Overview (continued)

Frame size	Type	3000 rpm Load Tension N	3000 rpm Load Thrust N	1500 rpm Load Tension N	1500 rpm Load Thrust N	1000 rpm Load Tension N	1000 rpm Load Thrust N	750 rpm Load Tension N	750 rpm Load Thrust N
1LE15, 1MB15 – Basic Line									
225	**1..15..-2BA2**	2350	1300	–	–	–	–	–	–
	1..15..-2BA6	2350	1300	–	–	–	–	–	–
	1..15..-2BB0	–	–	3020	1980	–	–	–	–
	1..15..-2BB2	–	–	3020	1980	–	–	–	–
	1..15..-2BB6	–	–	3020	1980	–	–	–	–
	1..15..-2BC2	–	–	–	–	3400	2400	–	–
	1..15..-2BC6	–	–	–	–	3400	2400	–	–
	1..15..-2BD0	–	–	–	–	–	–	3950	2950
	1..15..-2BD2	–	–	–	–	–	–	3900	2900
	1..15..-2BD6	–	–	–	–	–	–	3800	2800
250	**1..15..-2CA2**	2600	1750	–	–	–	–	–	–
	1..15..-2CA6	2550	1700	–	–	–	–	–	–
	1..15..-2CB2	–	–	3200	2400	–	–	–	–
	1..15..-2CB6	–	–	3200	2400	–	–	–	–
	1..15..-2CC2	–	–	–	–	3750	3000	–	–
	1..15..-2CC6	–	–	–	–	3750	3000	–	–
	1..15..-2CD2	–	–	–	–	–	–	4350	3550
	1..15..-2CD6	–	–	–	–	–	–	4300	3500
280	**1..15..-2DA0**	4500	2900	–	–	–	–	–	–
	1..15..-2DA2	4450	2850	–	–	–	–	–	–
	1..15..-2DA6	4450	2850	–	–	–	–	–	–
	1..15..-2DB0	–	–	6700	5100	–	–	–	–
	1..15..-2DB2	–	–	6600	5000	–	–	–	–
	1..15..-2DB6	–	–	6600	5000	–	–	–	–
	1..15..-2DC0	–	–	–	–	7900	6350	–	–
	1..15..-2DC2	–	–	–	–	7850	6300	–	–
	1..15..-2DC6	–	–	–	–	7850	6300	–	–
	1..15..-2DD0	–	–	–	–	–	–	8800	7200
	1..15..-2DD2	–	–	–	–	–	–	8800	7200
	1..15..-2DD6	–	–	–	–	–	–	8800	7200
315	**1..15..-3AA0**	5000	2900	–	–	–	–	–	–
	1..15..-3AA2	4800	2700	–	–	–	–	–	–
	1..15..-3AA4	4750	2650	–	–	–	–	–	–
	1..15..-3AA5	4700	2600	–	–	–	–	–	–
	1..15..-3AB0	–	–	7550	5500	–	–	–	–
	1..15..-3AB2	–	–	7300	5250	–	–	–	–
	1..15..-3AB4	–	–	7300	5250	–	–	–	–
	1..15..-3AB5	–	–	7050	5000	–	–	–	–
	1..15..-3AC0	–	–	–	–	8900	6850	–	–
	1..15..-3AC2	–	–	–	–	8900	6850	–	–
	1..15..-3AC4	–	–	–	–	8550	6500	–	–
	1..15..-3AC5	–	–	–	–	8250	6200	–	–
	1..15..-3AC6	–	–	–	–	8250	6200	–	–
	1..15..-3AD0	–	–	–	–	–	–	9800	7800
	1..15..-3AD2	–	–	–	–	–	–	9800	7800
	1..15..-3AD4	–	–	–	–	–	–	9500	7500
	1..15..-3AD5	–	–	–	–	–	–	9300	7300
	1..15..-3AD6	–	–	–	–	–	–	9100	7100

Type	3000 rpm Load Tension N	3000 rpm Load Thrust N	1500 rpm Load Tension N	1500 rpm Load Thrust N	1000 rpm Load Tension N	1000 rpm Load Thrust N	750 rpm Load Tension N	750 rpm Load Thrust N
1LE16, 1MB16 – Performance Line								
1..16..-2BA2	3800	2750	–	–	–	–	–	–
1..16..-2BA6	3800	2750	–	–	–	–	–	–
1..16..-2BB0	–	–	4950	3900	–	–	–	–
1..16..-2BB2	–	–	4950	3900	–	–	–	–
1..16..-2BB6	–	–	4900	3850	–	–	–	–
1..16..-2BC2	–	–	–	–	5750	4700	–	–
1..16..-2BC6	–	–	–	–	5700	4650	–	–
1..16..-2BD0	–	–	–	–	–	–	6600	5550
1..16..-2BD2		–	–	–	–	–	6550	5500
1..16..-2BD6	–	–	–	–	–	–	6500	5450
1..16..-2CA2	4750	3150	–	–	–	–	–	–
1..16..-2CA6	4750	3150	–	–	–	–	–	–
1..16..-2CB2	–	–	6050	4450	–	–	–	–
1..16..-2CB6	–	–	6050	4450	–	–	–	–
1..16..-2CC2	–	–	–	–	7100	5500	–	–
1..16..-2CC6	–	–	–	–	7100	5500	–	–
1..16..-2CD2	–	–	–	–	–	–	8100	6500
1..16..-2CD6	–	–	–	–	–	–	8000	6400
1..16..-2DA0	4500	2900	–	–	–	–	–	–
1..16..-2DA2	4450	2850	–	–	–	–	–	–
1..16..-2DA6	4450	2850	–	–	–	–	–	–
1..16..-2DB0	–	–	6700	5100	–	–	–	–
1..16..-2DB2	–	–	6600	5000	–	–	–	–
1..16..-2DB6	–	–	6600	5000	–	–	–	–
1..16..-2DC0	–	–	–	–	7900	6350	–	–
1..16..-2DC2	–	–	–	–	7850	6300	–	–
1..16..-2DC6	–	–	–	–	7850	6300	–	–
1..16..-2DD0	–	–	–	–	–	–	8800	7200
1..16..-2DD2	–	–	–	–	–	–	8800	7200
1..16..-2DD6	–	–	–	–	–	–	8800	7200
1..16..-3AA0	5000	2900	–	–	–	–	–	–
1..16..-3AA2	4800	2700	–	–	–	–	–	–
1..16..-3AA4	4750	2650	–	–	–	–	–	–
1..16..-3AA5	4700	2600	–	–	–	–	–	–
1..16..-3AB0	–	–	7550	5500	–	–	–	–
1..16..-3AB2	–	–	7300	5250	–	–	–	–
1..16..-3AB4	–	–	7300	5250	–	–	–	–
1..16..-3AB5	–	–	7050	5000	–	–	–	–
1..16..-3AC0	–	–	–	–	8900	6850	–	–
1..16..-3AC2	–	–	–	–	8900	6850	–	–
1..16..-3AC4	–	–	–	–	8550	6500	–	–
1..16..-3AC5	–	–	–	–	8250	6200	–	–
1..16..-3AC6	–	–	–	–	8250	6200	–	–
1..16..-3AD0	–	–	–	–	–	–	9800	7800
1..16..-3AD2	–	–	–	–	–	–	9800	7800
1..16..-3AD4	–	–	–	–	–	–	9500	7500
1..16..-3AD5	–	–	–	–	–	–	9300	7300
1..16..-3AD6	–	–	–	–	–	–	9100	7100

© Siemens AG 2015

Overview (continued)

1LE15 and 1MB15 motors in horizontal type of construction – Deep-groove bearings reinforced at both ends – Order code **L25**

Frame size	Type	3000 rpm		1500 rpm		1000 rpm		750 rpm	
		Load		Load		Load		Load	
		Tension	Thrust	Tension	Thrust	Tension	Thrust	Tension	Thrust
		N	N	N	N	N	N	N	N
1LE15, 1MB15 – Basic Line									
71/80/90		Available soon							
100	**1..15.1-1AA4**	1440	880	–	–	–	–	–	–
	1..15.1-1AA6	1430	870	–	–	–	–	–	–
	1..15.3-1AA4	1430	870	–	–	–	–	–	–
	1..15.1-1AB4		–	1820	1260	–	–	–	–
	1..15.1-1AB5		–	1800	1240	–	–	–	–
	1..15.1-1AB6		–	1780	1220	–	–	–	–
	1..15.3-1AB4		–	1780	1220	–	–	–	–
	1..15.3-1AB5		–	1780	1220	–	–	–	–
	1..15.1-1AC4		–	–	–	2110	1550	–	–
	1..15.1-1AC6	–	–	–	–	2090	1530	–	–
	1..15.1-1AD4	–	–	–	–	–	–	2380	1820
	1..15.1-1AD5	–	–	–	–	–	–	2370	1810
112	**1..15.1-1BA2**	1430	870	–	–	–	–	–	–
	1..15.1-1BA6	1410	850	–	–	–	–	–	–
	1..15.3-1BA2	1410	850	–	–	–	–	–	–
	1..15.1-1BB2	–	–	1810	1250	–	–	–	–
	1..15.1-1BB6	–	–	1790	1230	–	–	–	–
	1..15.3-1BB2	–	–	1790	1230	–	–	–	–
	1..15.1-1BC2	–	–	–	–	2110	1550	–	–
	1..15.1-1BC6	–	–	–	–	2090	1530	–	–
	1..15.3-1BC2	–	–	–	–	2090	1530	–	–
	1..15.1-1BD2	–	–	–	–	–	–	2370	1810
132	**1..15.1-1CA0**	2330	1010	–	–	–	–	–	–
	1..15.1-1CA1	2320	1000	–	–	–	–	–	–
	1..15.3-1CA0	2320	1000	–	–	–	–	–	–
	1..15.1-1CA6	2280	960	–	–	–	–	–	–
	1..15.3-1CA1	2280	960	–	–	–	–	–	–
	1..15.1-1CB0	–	–	2890	1570	–	–	–	–
	1..15.1-1CB2	–	–	2870	1550	–	–	–	–
	1..15.1-1CB6	–	–	2820	1500	–	–	–	–
	1..15.3-1CB0	–	–	2820	1500	–	–	–	–
	1..15.3-1CB2	–	–	2820	1500	–	–	–	–
	1..15.1-1CC0	–	–	–	–	3340	2020	–	–
	1..15.1-1CC2	–	–	–	–	3320	2000	–	–
	1..15.1-1CC3	–	–	–	–	3290	1970	–	–
	1..15.3-1CC0	–	–	–	–	3290	1970	–	–
	1..15.3-1CC2	–	–	–	–	3290	1970	–	–
	1..15.1-1CC6	–	–	–	–	3250	1930	–	–
	1..15.3-1CC3	–	–	–	–	3250	1930	–	–
	1..15.1-1CD0	–	–	–	–	–	–	3710	2390
	1..15.1-1CD2	–	–	–	–	–	–	3680	2360

Frame size	Type	3000 rpm		1500 rpm		1000 rpm		750 rpm	
		Load		Load		Load		Load	
		Tension	Thrust	Tension	Thrust	Tension	Thrust	Tension	Thrust
		N	N	N	N	N	N	N	N
1LE15, 1MB15 – Basic Line									
160	**1..15.1-1DA2**	2400	1680	–	–	–	–	–	–
	1..15.1-1DA3	2380	1660	–	–	–	–	–	–
	1..15.3-1DA2	2380	1660	–	–	–	–	–	–
	1..15.1-1DA4	2370	1650	–	–	–	–	–	–
	1..15.3-1DA3	2370	1650	–	–	–	–	–	–
	1..15.1-1DA6	2320	1600	–	–	–	–	–	–
	1..15.3-1DA4	2320	1600	–	–	–	–	–	–
	1..15.1-1DB2	–	–	3100	2380	–	–	–	–
	1..15.1-1DB4	–	–	3050	2330	–	–	–	–
	1..15.3-1DB2	–	–	3050	2330	–	–	–	–
	1..15.1-1DB6	–	–	3020	2300	–	–	–	–
	1..15.3-1DB4	–	–	3020	2300	–	–	–	–
	1..15.1-1DB7	–	–	2980	2260	–	–	–	–
	1..15.1-1DC2	–	–	–	–	3610	2890	–	–
	1..15.1-1DC4	–	–	–	–	3550	2830	–	–
	1..15.3-1DC2	–	–	–	–	3550	2830	–	–
	1..15.1-1DC6	–	–	–	–	3480	2760	–	–
	1..15.3-1DC4	–	–	–	–	3480	2760	–	–
	1..15.1-1DD2	–	–	–	–	–	–	4090	3370
	1..15.1-1DD3	–	–	–	–	–	–	4040	3320
	1..15.1-1DD4	–	–	–	–	–	–	4010	3290
180	**1..15..-1EA2**	2860	1710	–	–	–	–		
	1..15..-1EA6	2850	1700	–	–	–	–		
	1..15..-1EB2	–	–	3660	2510	–	–		
	1..15..-1EB4	–	–	3630	2480	–	–		
	1..15..-1EB6	–	–	3630	2480	–	–		
	1..15..-1EC4	–	–	–	–	4230	3080		
	1..15..-1EC6	–	–	–	–	4230	3080		
	1..16..-1ED4	–	–	–	–	–	–	4770	3620
	1..16..-1ED6	–	–	–	–	–	–	4690	3540
200	**1..15..-2AA4**	3390	2580	–	–	–	–		
	1..15..-2AA5	3340	2530	–	–	–	–		
	1..15..-2AA6	3340	2530	–	–	–	–		
	1..15..-2AB5	–	–	4430	3620	–	–		
	1..15..-2AB6	–	–	4430	3620	–	–		
	1..15..-2AC4	–	–	–	–	5210	4400		
	1..15..-2AC5	–	–	–	–	5170	4360		
	1..15..-2AC6	–	–	–	–	5150	4340		
	1..16..-2AD5	–	–	–	–	–	–	5880	5070
	1..16..-2AD6	–	–	–	–	–	–	5810	5000
225	**1..15..-2BA2**	3800	2750	–	–	–	–	–	–
	1..15..-2BA6	3800	2750	–	–	–	–	–	–
	1..15..-2BB0	–	–	4950	3900	–	–	–	–
	1..15..-2BB2	–	–	4950	3900	–	–	–	–
	1..15..-2BB6	–	–	4900	3850	–	–	–	–
	1..15..-2BC2	–	–	–	–	5750	4700	–	–
	1..15..-2BC6	–	–	–	–	5700	4650	–	–
	1..15..-2BD0	–	–	–	–	–	–	6600	5550
	1..15..-2BD2	–	–	–	–	–	–	6550	5500
	1..15..-2BD6	–	–	–	–	–	–	6500	5450
250	**1..15..-2CA2**	4750	3150	–	–	–	–	–	–
	1..15..-2CA6	4750	3150	–	–	–	–	–	–
	1..15..-2CB2	–	–	6050	4450	–	–	–	–
	1..15..-2CB6	–	–	6050	4450	–	–	–	–
	1..15..-2CC2	–	–	–	–	7100	5500	–	–
	1..15..-2CC6	–	–	–	–	7100	5500	–	–
	1..15..-2CD2	–	–	–	–	–	–	8100	6500
	1..15..-2CD2	–	–	–	–	–	–	8000	6400

For frame sizes > 250 standard version.

© Siemens AG 2015

Coolant temperature and installation altitude

Overview

The specified rated output is applicable for continuous duty in accordance with IEC 60034-1 at the frequency of 50 Hz, a coolant temperature (CT) or ambient temperature of 40 °C and an installation altitude (IA) up to 1000 m above sea level. 1LE1, 1MB1 and 1PC1 motors for ambient temperatures > 40 °C are equipped with various types of seal. Mountings such as brake, terminal box at NDE, type of construction IM V1, type of construction IM V3 can sometimes exceed utilization in accordance with temperature class 130 (B).

For higher coolant temperatures and/or installation altitudes greater than 1000 m above sea level, the specified motor output must be reduced using the factor k_{HT}.

Depending on the frame size of the motor or the number of poles, special windings may be added to the motors for the different operating conditions.

This results in an admissible output of the motor of:

$P_{adm} = P_{rated} \cdot k_{HT}$

If the admissible motor output is no longer adequate for the drive, it should be checked whether the motor with the next higher rated output fulfills the requirements.

Abbreviation	Description	Unit
P_{adm}	Admissible motor output	kW
P_{rated}	Rated output	kW
k_{HT}	Factor for abnormal coolant temperature and/or installation altitude	

The motors are designed for temperature class 155 (F) and utilized in temperature class 130 (B). Under non-standard operating conditions, if they are to be used in this class, the admissible output must be determined from the table below.

Reduction factor k_{HT} for different installation altitudes and/or coolant temperatures

Installation altitude above **sea level**	Installation altitude above sea level Coolant temperature					
m	< 30 °C	30 °C ... 40 °C	45 °C	50 °C	55 °C	60 °C
1000	1.07	1.00	0.96	0.92	0.87	0.82
1500	1.04	0.97	0.93	0.89	0.84	0.79
2000	1.00	0.94	0.90	0.86	0.82	0.77
2500	0.96	0.90	0.86	0.83	0.78	0.74
3000	0.92	0.86	0.82	0.79	0.75	0.70
3500	0.88	0.82	0.79	0.75	0.71	0.67
4000	0.82	0.77	0.74	0.71	0.67	0.63

Coolant temperature and installation altitude are rounded to 5 °C and 500 m respectively.

For details of derating for utilization in temperature class 155 (F), see "DURIGNIT IR 2000 insulation system".

Motors for coolant temperatures other than 40 °C or installation altitudes higher than 1000 m above sea level for utilization in temperature class 130 (B), must always be ordered with the additional identification code "–Z" and plain text. In the case of extreme derating, the operating data for the motors, i.e. efficiency and power factor, will also be less favorable due to partial utilization.

The following special versions are possible for 1LE1 and 1PC1 motors:

- Motors for coolant temperatures from –40 to +40 °C order code **D03**
- Motors for coolant temperatures from –30 to +40 °C order code **D04**

When ordering with order codes **D03** or **D04** in combination with mountings, the respective technical specifications have to be observed and it is necessary to inquire.

For details of order codes for use in temperature class 155 (F), see "DURIGNIT IR 2000 insulation system" under "Windings and insulation" on Page 1/28.

Ambient temperature:
All motors can be used in the standard version at ambient temperatures between –20 and +40 °C. Exposure to direct sunlight can result in uncontrollable rises in motor temperature. To prevent this, appropriate shading measures such as a sun canopy are recommended.
Motors can be utilized in temperature class 155 (F)

- at 40 °C with service factor 1.1, i.e. the motor can be continuously overloaded with 10 % of the rated output in the case of IE1 motors
- at 40 °C with service factor 1.15, i.e. the motor can be continuously overloaded with 15 % of the rated output in the case of IE2 motors and higher efficiency classes
- above 40 °C at rated output.

When motors are used in temperature class 130 (B) for higher ambient temperatures and/or installation altitudes, derating occurs in accordance with the table "Reduction factor k_{HT} for different installation altitudes and/or coolant temperatures".
For motors ex stock, the service factor is indicated on the rating plate.
For other temperatures, special measures are necessary.
When brakes are to be mounted on motors intended for operation at temperatures below freezing, please inquire.

© Siemens AG 2015

Overview

Separately driven fan

The use of a separately driven fan is recommended to increase motor utilization at low speeds and to limit noise generation at speeds significantly higher than the synchronous speed. Both of these results can only be achieved with converter operation. Please inquire about traction and vibratory operation.

The separately driven fan can be supplied already fitted, order code **F70**.

It can also be ordered separately and retrofitted. For selection information and article numbers, see the section "Accessories" (available soon). A rating plate listing all the important data is fitted to the separately driven fan. Please note the direction of rotation of the separately driven fan (axial-flow fan) when connecting it. Admissible coolant temperatures CT_{min} –25 °C, CT_{max} +65 °C [1], lower/higher coolant temperatures are available on request. When the separately driven fan is mounted, the length of the motor increases by Δ l. For an explanation of the additional dimensions and weights, see "Technology", "Dimensions and weights" from Page 1/87 onwards.

Technical specifications of separately driven fan (according to tolerances of EN 60034-1)

Frame size	Rated voltage range		Frequency	Rated speed	Power consumption	Rated current
	V		Hz	rpm	kW	A
100	1 AC	230 to 277	50	2790	0.075	0.29
	3 AC	200 to 303 Δ	50	2830	0.086	0.27
	3 AC	346 to 525 Y	50	2830	0.086	0.16
	1 AC	230 to 277	60	3280	0.094	0.28
	3 AC	220 to 332 Δ	60	3490	0.093	0.27
	3 AC	380 to 575 Y	60	3490	0.093	0.16
112	1 AC	230 to 277	50	2720	0.073	0.26
	3 AC	200 to 303 Δ	50	2770	0.085	0.27
	3 AC	346 to 500 Y	50	2770	0.085	0.15
	1 AC	230 to 277	60	3000	0.107	0.31
	3 AC	220 to 332 Δ	60	3280	0.094	0.28
	3 AC	380 to 575 Y	60	3280	0.094	0.16
132	1 AC	230 to 277	50	2860	0.115	0.40
	3 AC	200 to 303 Δ	50	2880	0.138	0.45
	3 AC	346 to 525 Y	50	2880	0.138	0.24
	1 AC	230 to 277	60	3380	0.185	0.59
	3 AC	220 to 332 Δ	60	3470	0.148	0.41
	3 AC	380 to 575 Y	60	3470	0.148	0.24
160 to 200	1 AC	230 to 277	50	2780	0.236	0.96
	3 AC	200 to 303 Δ	50	2840	0.220	0.76
	3 AC	346 to 525 Y	50	2830	0.220	0.43
	3 AC	220 to 332 Δ	60	3400	0.284	0.94
	3 AC	380 to 575 Y	60	3400	0.284	0.56
225 M to 280 M	3 AC	200 to 240 Δ	50	2720	0.450	2.00
	3 AC	380 to 420 Y	50	2720	0.450	1.15
	3 AC	440 to 480 Y	60	3320	0.520	1.05
315 2-pole	3 AC	200 to 240 Δ	50	2750	0.650	2.85
	3 AC	380 to 420 Y	50	2750	0.650	1.64
	3 AC	440 to 480 Y	60	3365	0.750	1.60
315 4, 6, 8-pole	3 AC	200 to 240 Δ	50	2720	0.450	2.00
	3 AC	380 to 420 Y	50	2720	0.450	1.15
	3 AC	440 to 480 Y	60	3320	0.520	1.05

For article numbers and type details, see operating instructions.

[1] For single-phase variants (1 AC) of frame size 160, the admissible coolant temperature CT_{max} is +50 °C.

© Siemens AG 2015

Overview (continued)

Brakes

Spring-operated disk brakes are used for the brakes with order code **F01** and function as a holding brake. When the brake is ordered, the supply voltage must be specified. The supply voltage for brakes is explained under "Modular technology – Additional versions" on Page 1/81.

For the design of the braking time, run-on revolutions, braking energy per braking procedure as well as the service life of the brake linings, see "Configuration of motors with brakes" on Page 1/79.

When a brake is mounted, the length of the motor increases by the dimension Δ l. For an explanation of the additional dimensions and weights, see "Special technology", "Dimensions and weights" from Page 1/87 onwards.

*The brake can be retrofitted by authorized partners. The motor must be prepared for this. When the motor is ordered, the option "Prepared for mountings, center hole only" order code **G40** must be specified (see "Mechanical design and degrees of protection" on Page 1/44).*

Ambient temperature

- –20 to +40 °C holding/operating brake (standard)
- up to +60 °C only as holding brake

Definition of duty type

- Operating brake:
  The motor shaft can be braked from full operating speed down to zero speed of the motor. All the kinetic energy produced by the drive train is converted to heat by friction during braking. Braking energy is produced at $n > 0$ rpm. The maximum permissible switching frequency must be taken into account. When this brake is used, installation of a separately driven fan is recommended in order to ensure adequate cooling when the motor is at a standstill. The operating brake is also capable of functioning as a holding brake.
- Holding brake:
  The purpose of braking or "holding" the motor shaft is merely to suppress unintended rotation caused by externally applied torque forces, e.g. when a load is suspended from a crane rope drum. The holding brake is primarily deployed when the motor is at a standstill ($n = 0$ rpm), or is close to $n = 0$ rpm and coasting down to a standstill. As a result, no additional braking energy or braking heat is transferred to the motor.

Note:
The holding brake must not be used as an operating brake as it could then cause danger to life and property damage.

2LM8 spring-operated disk brake

The 2LM8 brake has IP55 degree of protection.

Please inquire if motors with brakes are to be operated below the freezing point or in very humid environments (e.g. close to the sea) with long standstill times. Please inquire if motors with brakes are to be operated in converter mode at low speeds.

Design and mode of operation

The brake takes the form of a single-disk brake with two friction surfaces.

The braking torque is generated by friction when pressure is applied by one or more pressure springs in the de-energized state.
The brake is released electromagnetically.

When the motor brakes, the rotor which can be axially shifted on the hub or the shaft is pressed via the armature disk against the friction surface by means of the springs. In the braked state, there is a gap S_{Gap} between the armature disk and the solenoid component. To release the brake, the solenoid is energized with DC voltage. The resulting magnetic force pulls the armature disk against the spring force on to the solenoid component. The spring force is then no longer applied to the rotor which can rotate freely.

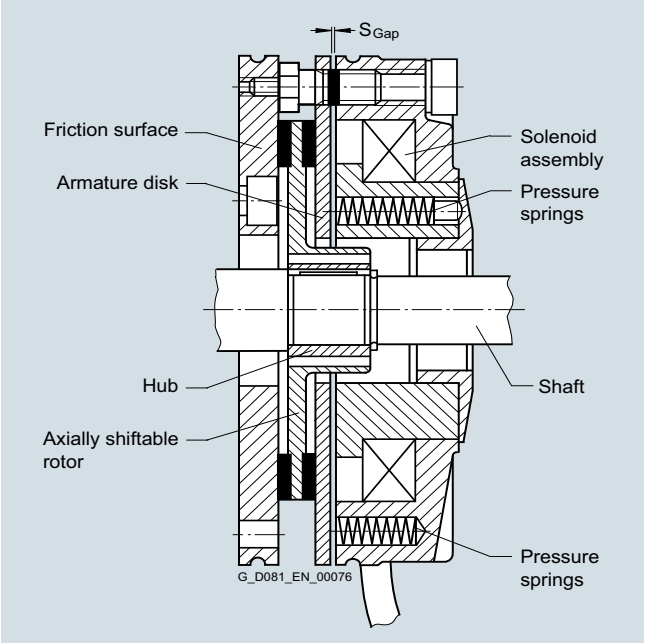

Design of the 2LM8 spring-operated disk brake

Rating plate

The following brake data is specified on the motor rating plate.

Brake type, supply voltage, frequency, current, temperature class, braking torque

© Siemens AG 2015

Overview (continued)

Operating values for spring-operated brakes with standard excitation

For motor frame size	Brake type	Rated braking torque at 100 rpm	Rated braking torque at 100 rpm in % at the following speeds			Supply voltage	Current/ power input [1]		Brake application time t_2 [2]	Brake release time	Brake moment of inertia	Noise level L_p with rated air gap	**Service capability of the brake** Lifetime of brake lining L	Air gap adjustment required after braking energy L_N
			1500 rpm	3000 rpm	Max. speed									
		Nm	%	%	%	V	A	W	ms	ms	kgm^2	dB(A)	Nm · 10^6	Nm · 10^6
80	**2LM8 010-3NA10**	10	85	78	65	AC 230	0.12	25	26	70	0.000045	75	270	29
	2LM8 010-3NA60					AC 400	0.14							
	2LM8 010-3NA80					DC 24	1.04							
90	**2LM8 020-4NA10**	20	83	76	66	AC 230	0.15	32	37	90	0.00016	75	740	79
	2LM8 020-4NA60					AC 400	0.17							
	2LM8 020-4NA80					DC 24	1.25							
100	**2LM8 040-5NA10**	40	81	74	66	AC 230	0.2	40	43	140	0.00036	80	1350	115
	2LM8 040-5NA60					AC 400	0.22							
	2LM8 040-5NA80					DC 24	1.67							
112	**2LM8 060-6NA10**	60	80	73	65	AC 230	0.25	53	60	210	0.00063	77	1600	215
	2LM8 060-6NA60					AC 400	0.28							
	2LM8 060-6NA80					DC 24	2.1							
132	**2LM8 100-7NA10**	100	79	72	65	AC 230	0.27	55	50	270	0.0015	77	2450	325
	2LM8 100-7NA60					AC 400	0.31							
	2LM8 100-7NA80					DC 24	2.3							
160	**2LM8 260-8NA10**	260	75	68	65	AC 230	0.5	100	165	340	0.0073	79	7300	935
	2LM8 260-8NA60					AC 400	0.47							
	2LM8 260-8NA80					DC 24	4.2							
180	**2LM8 315-0NA10**	315	75	68	65	AC 230	0.5	100	152	410	0.0073	79	5500	470
	2LM8 315-0NA60					AC 400	0.56							
	2LM8 315-0NA80					DC 24	4.2							
200, 225	**2LM8 400-0NA10**	400	73	68	65	AC 230	0.55	110	230	390	0.0200	93	9450	1260
	2LM8 400-0NA60					AC 400	0.61							
	2LM8 400-0NA80					DC 24	4.6							

Lifetime of the brake lining

The braking energy L_N up to when the brake should be adjusted, depends on various factors. The main influencing factors include the masses to be braked, the operating speed, the switching frequency and therefore the temperature at the frictional surfaces. It is therefore not possible to specify a value for the friction energy until readjustment that is valid for all operating conditions.

When used as operating brake, the specific frictional surface wear (wear volume for the frictional work) is approximately 0.05 up to 2 cm^3/kWh.

Maximum admissible speeds

The maximum admissible speeds from which emergency stops can be made are listed in the next table. These speeds should be considered as recommended values and must be checked under actual operating conditions.

The maximum admissible friction energy depends on the switching frequency and is shown for the individual brakes in the following diagram. Increased wear can be expected when the brakes are used for emergency stops.

[1] For 400 V AC and for 24 V DC, the power can deviate by up to +10 % as a function of the selected supply voltage.

[2] The specified switching times are valid for switching on the DC side with a rated release travel and with the coil already warm. They are average values which may vary depending on factors such as the rectifier type and the release travel. The brake application time for switching on the AC side, for example, is approximately 6 times longer than for switching on the DC side.

© Siemens AG 2015

Overview (continued)

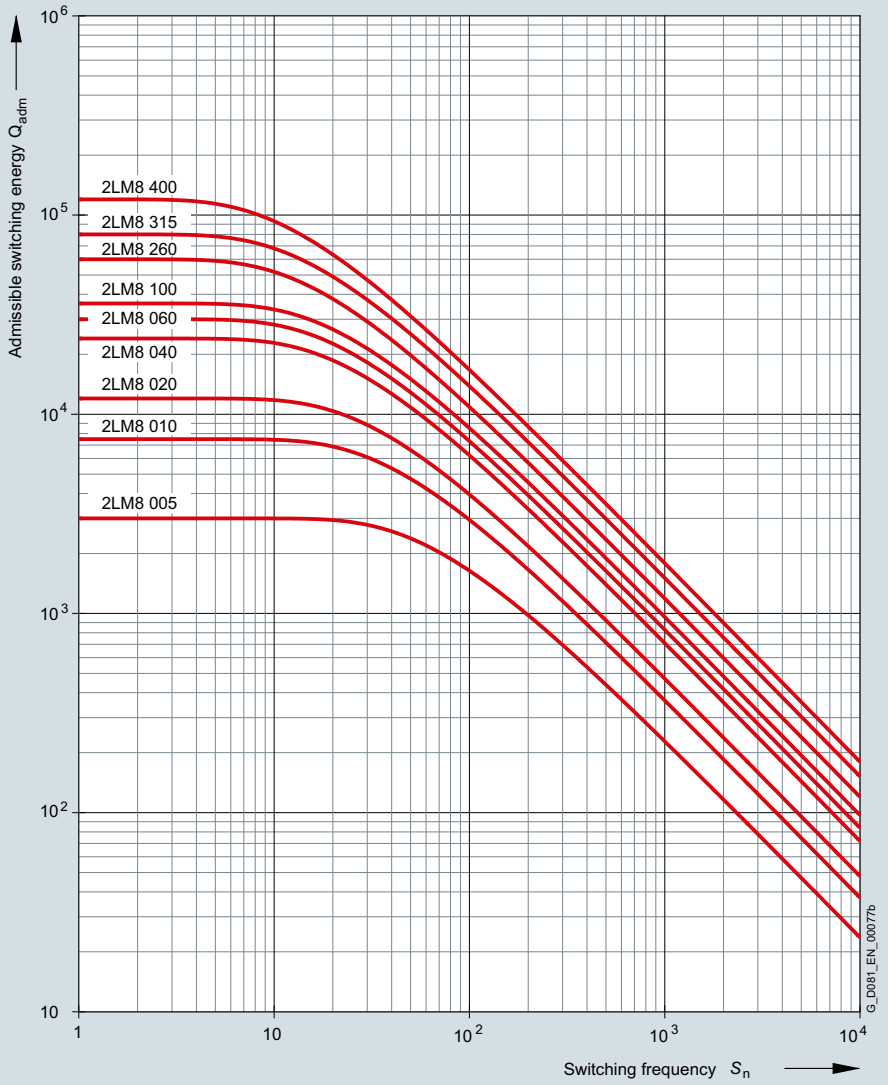

For motor frame size	Brake type	Maximum admissible speeds			Changing the braking torque			Readjusting the air gap		
		Max. adm. operating rpm if max. operating energy utilized	Max. adm. no-load rpm with emergency stop function		Reduction per notch	Dim. "O1"	Min. braking torque	Rated air gap $S_{Gap\ rated}$	Maximum air gap $S_{Gap\ max.}$	Min. rotor thickness $h_{min.}$
			Horizontal mounting	Vertical mounting						
		rpm	rpm	rpm	Nm	mm	Nm	mm	mm	mm
80	**2LM8 010-3NA . .**	3000	6000	6000	0.35	8.0	7.0	0.2	0.45	5.5
90	**2LM8 020-4NA . .**	3000	6000	6000	0.76	7.5	18.2	0.2	0.55	7.5
100	**2LM8 040-5NA . .**	3000	6000	6000	1.29	12.5	21.3	0.3	0.65	8.0
112	**2LM8 060-6NA . .**	3000	6000	6000	1.66	11.0	32.8	0.3	0.75	7.5
132	**2LM8 100-7NA . .**	3000	5300	5000	1.55	13.0	61.1	0.3	0.75	8.0
160	**2LM8 260-8NA . .**	1500	4400	3200	5.6	17.0	157.5	0.4	1.2	12.0
180	**2LM8 315-0NA . .**	1500	4400	3200	5.6	17.0	178.4	0.4	1.0	12.0
200, 225	**2LM8 400-0NA . .**	1500	3000	3000	6.15	21.0	248.7	0.5	1.5	15.5

© Siemens AG 2015

Overview (continued)

Changing the braking torque

The brake is supplied with the braking torque already set. For 2LM8 brakes, the torque can be reduced to the dimension O_1 by unscrewing the adjusting ring with a hook spanner. The braking torque changes by the values shown in the above table for each notch of the adjusting ring.

Readjusting the air gap

Under normal operating conditions, the brake is practically maintenance-free. The air gap S_{Gap} must only be checked at regular intervals if the application requires an extremely large amount of frictional energy and readjusted to the rated gap $S_{Gap\ rated}$ at the latest when the maximum air gap $S_{Gap\ max}$ is reached.

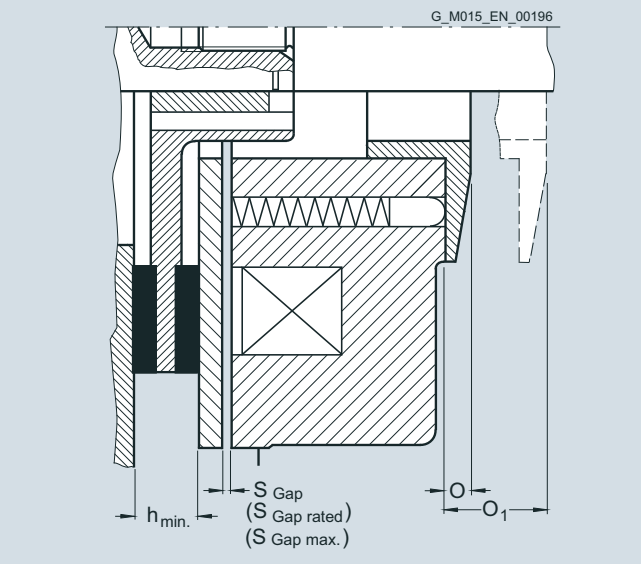

KFB spring-operated brake

This brake is the standard brake for 1LE motors in frame sizes 250 to 315. For frame sizes 180 to 225, apart from the standard brake 2LM8, KFB brakes can also be supplied. Special brake selections are available on request.



KFB spring-operated brake

The KFB solenoid double-disk spring-operated brake is a safety brake which brakes the motor if the supply is disconnected (power failure, emergency stop). The KFB brake, IP67 degree of protection, is mainly used for electric motors for traversing, cross-traversing and lifting gear in cranes as well as for special industrial applications.

Design and mode of operation

When the brake current is switched on, an electromagnetic field develops which overcomes the spring force of the brake. The corresponding modules, including the motor shaft, can rotate freely. The brake is released. If the brake current is switched off or if there is a power failure, the electromagnetic field of the brake disappears. The mechanical braking energy is transferred to the motor shaft. The motor is braked.

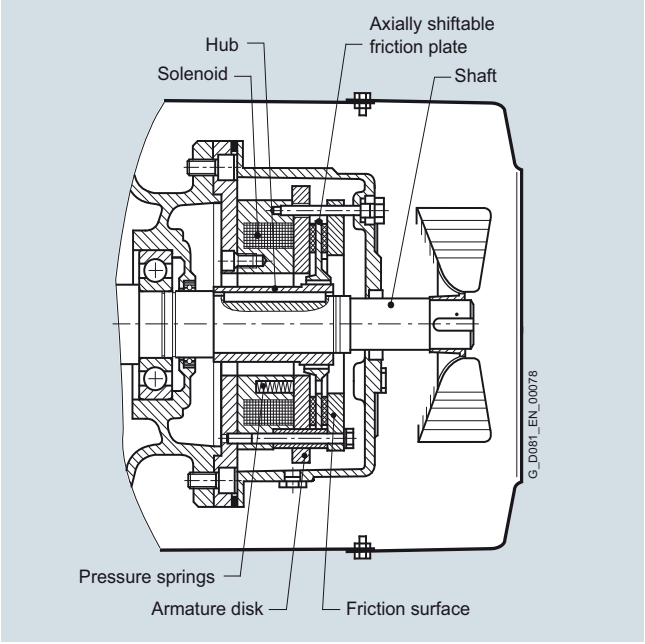

Design of KFB spring-operated brakes

Other characteristics of the KFB brake

- High degree of protection IP67
- Corrosion-resistant in seawater and in the tropics.
- The brake is a dynamic brake, not simply a holding brake. For this reason there is less wear, especially in the case of emergency stops (commissioning).
- High wear reserves – repeated stepless air gap readjustment is possible. This results in extremely long operating times and low service and operating costs.
- The function and wear can be monitored with microswitches and proximity switches. Microswitch On/Off is standard for 1LE motors. Anti-condensation heating is possible as an option.
- Fully functional brake for enclosure acceptance test. Visual inspection of brake is possible during operation.
- The brake (air gap) can be adjusted in the factory, for example, and mounted on the drive motor without further adjustments.

The wear parts can be replaced without great outlay. After the housing has been opened (three screws), it is easy to replace the friction plate. It is not necessary to disassemble the entire brake.

© Siemens AG 2015

Overview (continued)

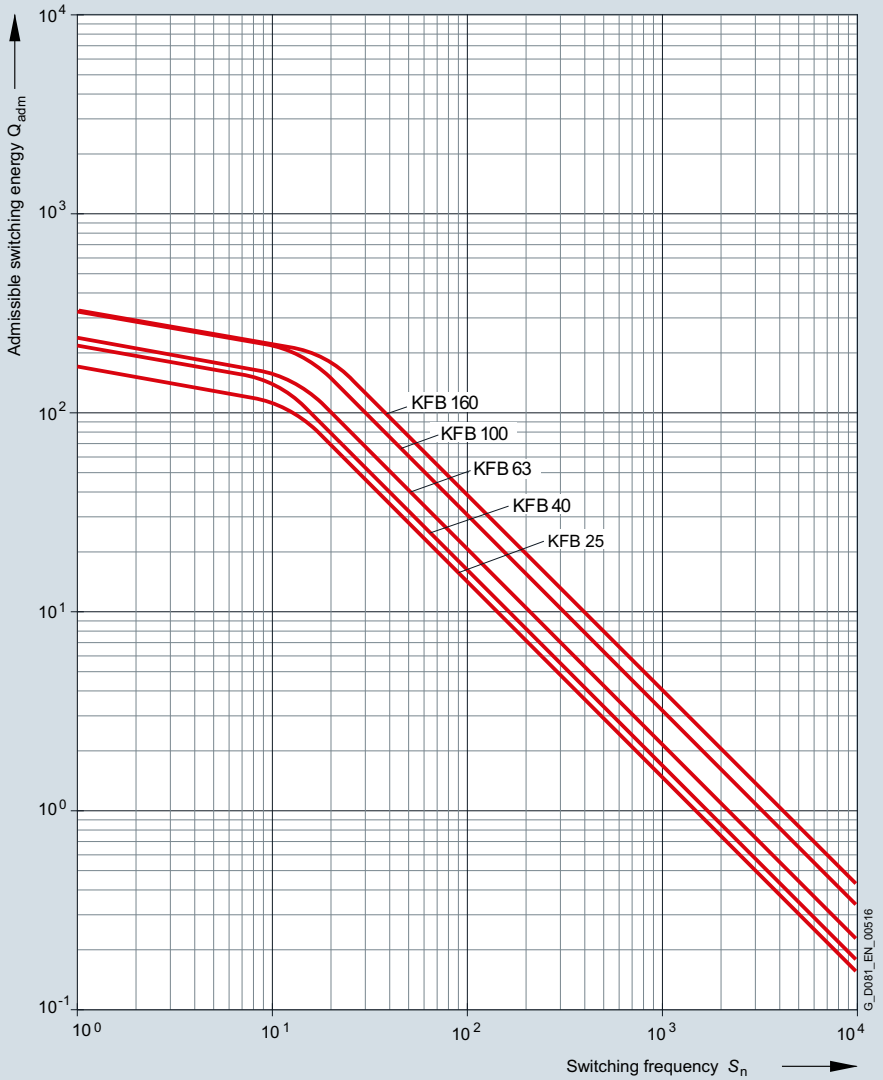

© Siemens AG 2015

Overview (continued)

Overview of brake selection for 1LE motors

			For motor Frame size 180 [1]	200 [1]	225 [1]	250 [2]	280 [2]	315 [2]
No. of poles			2 to 8	2 to 8	2 to 8	2 to 8	4 to 8	4 to 8
Flange bearing plate for NDE brake mounting			A300	A350	A350	A400	A450	A550
Max. diameter for 2nd shaft extension			48k6	55m6	55m6	60m6	65m6	70m6
Brake type			**KFB 25**	**KFB 40**	**KFB 40**	**KFB 63**	**KFB 100**	**KFB 160**
Braking torque		Nm	225	360	360	567	900	1440
Nominal dynamic braking torque according to VDE 0580		Nm/rpm	250/127	400/117	400/117	630/92	1000/78	1600/69
Dynamic braking torque [3]	at 750 rpm	Nm	249	332	332	504	780	1248
	at 1000 rpm	Nm	240	316	316	491	760	1200
	at 1500 rpm	Nm	231	304	304	466	720	1136
	at 3000 rpm	Nm	210	276	276	378	580	880
	at n_{max}	Nm	165	220	220	346	500	800
Maximum speed n_{max} – IM B3/V1		rpm	6000	5500	5500	4700	4000	3600
Current at 110 V DC		W	158	196	196	220	307	344
Output at 230 V AC		W	160	188	188	206	316	340
Output at 110 V DC		A	1.44	1.78	1.78	2	2.79	3.13
Current at 230 V AC (207 V DC coil voltage)		A	0.77	0.91	0.91	1	1.53	1.64
Current at 400 V AC (180 V DC coil voltage)		A	0.8	1.18	1.18	1.25	1.8	2.1
Current at 24 V DC		A	5.21	6.92	6.92	8.17	12.2	12.8
Weight, approx.		kg	42	55	55	74	106	168
Application time t_1		ms	70	80	80	112	126	183
Release time t_2		ms	240	250	250	342	375	500
Brake moment of inertia		kg m^2	0.0048	0.0068	0.0068	0.0175	0.036	0.05
Lifetime of brake lining L		Nm · 10^6	3600	3110	3110	4615	7375	10945
Air gap adjustment required after braking energy L_N		Nm · 10^6	810	935	935	1185	2330	3485

Configuration of motors with brakes

Braking time

The time it takes the motor to come to a standstill comprises two components:
a.) The application time of the brake t_2
b.) The braking time t_{Br}

$$t_{Br} = \frac{J \cdot n_{rated}}{9.55 \cdot (T_B \pm T_L)}$$

t_{Br} Braking time in s
J Total moment of inertia in kgm^2
n_{rated} Rated speed of the motor with brake in rpm
T_B Rated braking torque in Nm
T_L Average load torque in Nm
(if T_L supports braking, T_L is positive)

Braking energy per braking operation Q_{adm}

The braking energy per braking operation in Nm comprises the energy of the moments of inertia to be braked Q_{Kin} and the energy Q, which must be applied in order to brake against a load torque:

$$Q_{adm} = Q_{Kin} + Q$$

a.) The energy of the moments of inertia in Nm

$$Q_{Kin} = \frac{J \cdot n^2_{rated}}{182.4}$$

n_{rated} Rated speed before braking in rpm
J Total moment of inertia in kgm^2. The mass moment of inertia J specified in the formula corresponds to the total moment of inertia of all braked masses referred to the motor/brake speed.

b.) Braking energy on emergency trip

The braking energy for occasional emergency trips must be checked to ensure that it does not cause the brake to overheat. Please refer to table "Technical specifications of brakes" for permissible values. The braking energy produced for traversing gear can be calculated approximately with the following equation:

$$Q = \frac{J_{tot} \cdot n^2_{Br}}{182.4 \cdot 10^3} \cdot \frac{T_{Br}}{T_{Br} \pm T_L}$$

Q Energy capability/braking energy in kJ
T_{Br} Braking torque in Nm
T_L Total of all load torques in Nm referred to the brake (motor) shaft
n_{Br} Speed of brake (motor) shaft in rpm
J_{tot} Total moment of inertia to be braked in kgm^2 reduced to the brake (motor) shaft
T_L is positive if it supports braking (e.g. hoisting a load)
T_L is negative if it counteracts braking (e.g. lowering a load)

[1] The standard brake for frame sizes 180 to 225 is the 2LM8 brake. KFB brake on request.

[2] The standard brake for frame sizes 250 to 315 is the KFB brake.

[3] Dynamic braking torque also depends on the load data, temperatures in excess of the maximum permissible lining surface temperatures must be avoided.

© Siemens AG 2015

Overview (continued)

The total moment of inertia J_{tot} is the sum of the individual moments of inertia of the plant components to be braked, reduced to the brake (motor) shaft, and the moment of inertia of the linear-motion masses. The equivalent mass inertia J_{Eqv} of a linear-motion mass m with velocity v, referred to the brake (motor) speed n_{Br}, is calculated as follows:

$$J_{Eqv} = 91.2 \cdot m \cdot \left(\frac{v}{n_{Br}}\right)^2$$

m Mass of the linear-motion load in kg
v Velocity of the linear-motion load in m/s
n_{Br} Speed of brake (motor) shaft in rpm

The velocity and/or speed to be entered here must equal the maximum values in normal operation. An increase in velocity resulting from wind forces may also need to be taken into account.

Definition of operating times (VDI 2241)

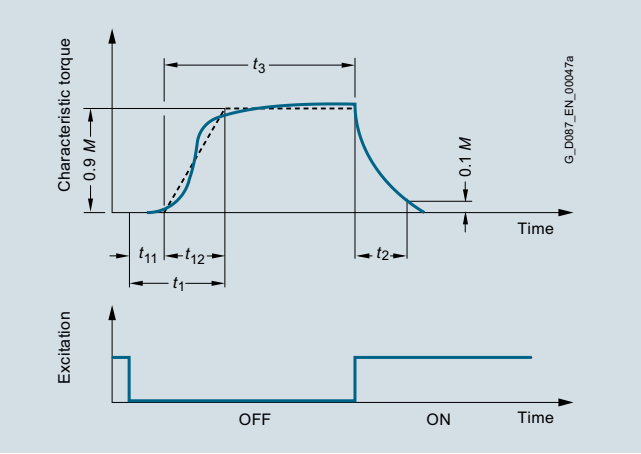

Brake switching times

Switching times:
t_1 Brake application time
t_2 Disconnection time
t_3 Slip time
t_{11} Response time
t_{12} Rise time

Run-on revolutions U

The number of run-on revolutions U of the motor with brake can be calculated as follows:

$$U = \frac{n_{rated}}{60}\left(t_1 + \frac{t_{Br}}{2}\right)$$

t_1 Brake application time in ms

Lifetime of the brake lining L and readjustment of the air gap

The brake lining wears due to friction which increases the air gap and the release time for the brake at standard excitation.

In order to calculate the lifetime of the brake lining in terms of operations S_{max}, then the lifetime of the brake lining L in Nm must be divided by the braking energy Q_{adm}:

$$S_{max} = \frac{L}{Q_{adm}}$$

The interval between adjustments N can be calculated in terms of operations by dividing the braking energy L_N which the brake can output until it is necessary to readjust the working air gap by Q_{perm}:

$$N = \frac{L_N}{Q_{adm}}$$

© Siemens AG 2015

Overview (continued)

Additional versions

2LM8 spring-operated disk brake

Motor series

This brake is mounted as standard on 1LE1 motors up to frame size 225 (with the exception of 1LE1 with order code **F90** – version "Forced-air cooled motors without external fan and fan cover" and 1PC1).

Voltage and frequency

The solenoids and the brake rectifier are designed for connection to the following voltages or can be supplied for the following voltages:

- Brake supply voltage 24 V DC
  Order code **F10**
- Brake supply voltage 230 V AC
  Order code **F11**
- Brake supply voltage 400 V AC
  (directly at the terminal strip)
  Order code **F12**

When 60 Hz is used, the voltage for the brake must not be increased!

Order codes **F10**, **F11** and **F12** may only be used in conjunction with order code **F01**.

Connections

Labeled terminals are provided in the main terminal box of the motor to connect the brake.

The AC voltage for the brake excitation winding is connected to the two free terminals of the rectifier block (~).

The brake can be released when the motor is at a standstill by separately exciting the solenoid. In this case, an AC voltage must be connected at the rectifier block terminals. The brake remains released as long as this voltage is present.

The rectifier is protected against overvoltages by varistors in the input and output circuits.

For 24 V DC brakes, the brake terminals are directly connected to the DC voltage source.

See also circuit diagrams on the following page.

Fast brake application

If the brake is disconnected from the line supply, the brake is applied.
The application time for the brake disk is delayed as a result of the inductance of the solenoid (shutdown on the AC side). This results in a considerable delay before the brake is mechanically applied. In order to achieve short brake application times, the circuit must be interrupted on the DC side. To realize this, the wire jumpers, located between contacts 1+ and 2+ at the rectifier are removed and replaced by the contact of an external switch. See also circuit diagrams on the following page.

Manual brake release with lever

The brakes can be supplied with a mechanical manual release with lever.
Order code **F50**

The dimensions of the brake lever depend on the motor frame size and can be read from the dimensional drawing generator for motors in the DT Configurator tool for low-voltage motors.

KFB spring-operated brake

Motor series

This brake is the standard brake for 1LE motors in frame sizes 250 to 315.

Voltage and frequency

The solenoids and the brake rectifier can be connected to the following voltages:
230 V 1 AC 50 Hz ±10 %

When 60 Hz is used, the voltage for the brake must not be increased!

The brake can also be supplied for other voltages:

- Brake supply voltage: 24 V DC
  Order code **F10**
- Brake supply voltage: 230 V AC
  Order code **F11**
- Brake supply voltage: 400 V AC
  (directly at the terminal strip)
  Order code **F12**

Order codes **F10** and **F12** may only be used in conjunction with order code **F01**.

Connections

Labeled terminals are provided in the main terminal box of the motor to connect the brake.

KFB brakes are connected through a standard bridge or half-wave rectifier. See also circuit diagrams on the following page.

A special circuit is not required. Optimal switching times are achieved without the need to use special circuits.

Fast brake application

Not available for the KFB brake.

Manual brake release with lever

The brake can be released manually with screws as standard. Mechanical manual release with a lever can be ordered with order code **F50**.

The dimensions of the brake lever depend on the motor frame size and can be read from the dimensional drawing generator for motors in the Drive Technology Configurator tool for low-voltage motors. Up-to-date data are available from the brake manufacturer.

© Siemens AG 2015

Overview (continued)

Bridge rectifier / half-wave rectifier

Brakes are connected through a standard bridge or half-wave rectifier or directly to the 2LM8 brake. See the circuit diagrams below.

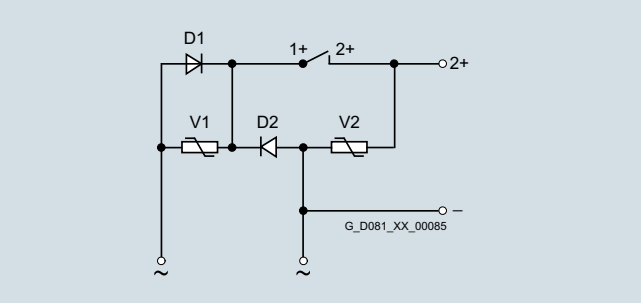

Half-wave rectifier 400 V AC

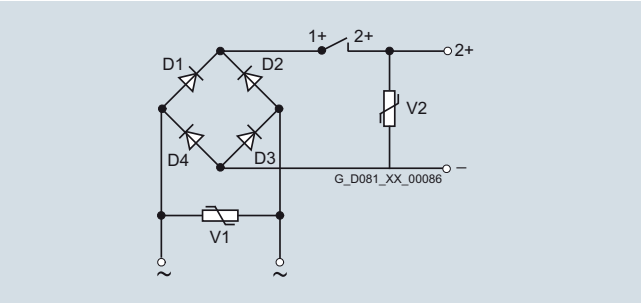

Bridge rectifier 230 V AC

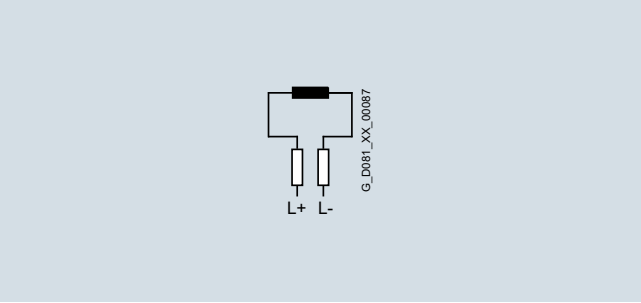

Brake connection for 24 V DC

Basic versions

The 1LE1 motors (with the exception of 1LE1 with option **F90** – version "Forced-air cooled motors without external fan and fan cover" and 1PC1) can be used in a much wider range of applications (e.g. as motors with brakes) if the following modules are mounted.

- **1XP8 012** rotary pulse encoder
- Separately driven fan
- Brake

The brake must always be mounted in the factory for safety reasons. The rotary pulse encoder and/or the separately driven fan can also be retrofitted.

The degree of protection of the motors with modular technology is IP55. Higher degrees of protection on request.

When a rotary pulse encoder, brake or separately driven fan is mounted, the length of the motor increases by Δ l. For an explanation of the additional dimensions and weights, see "Technology", "Dimensions and weights" from Page 1/87 onwards.

1XP8 012 rotary pulse encoder

The rotary pulse encoder can be supplied already mounted in an HTL version as **1XP8 012-10** with order code **G01** or in a TTL version as **1XP8 012-20** with order code **G02**. In combination with the separately driven fan, rotary pulse encoders are supplied with a plug connector externally. The rotary pulse encoder can only be mounted on a standard non-drive end (NDE), i.e. a second shaft extension cannot be supplied.

The encoder can be retrofitted. The motor must be prepared for this. When the motor is ordered, the option "Prepared for mountings, center hole only" order code **G40** or the option "Prepared for mountings with shaft **D12**" order code **G41** must be specified (see "Mechanical design and degrees of protection" on Page 1/44).

When the rotary pulse encoder is mounted, the length of the motor increases by Δ l. For an explanation of the additional dimensions and weights, see "Technology", "Dimensions and weights" from Page 1/87. The rotary pulse encoders of "Modular technology" and "Special technology" are fitted as standard with a protective cover made of non-corrosive sheet steel.

Mounting of encoder for temperatures below –20 °C and higher than +40 °C available on request.

Technical specifications of the rotary pulse encoder Supply voltage U_B	**1XP8 012-10** (HTL version) +10 V to +30 V	**1XP8 012-20** (TTL version) 5 V ±10 %
Current input without load	150 mA	120 mA
Admissible load current per output	max. 100 mA	max. 20 mA
Pulses per revolution	1024	1024
Outputs	2 square-wave pulses A, B – 2 inverted square-wave pulses A, B Zero pulse and inverted zero pulse	
Pulse offset between the two outputs	90°	90°
Output amplitude	$U_{High} = U_B - 2.5$ V $U_{Low} = 1.6$ V	$U_{High} > 2.5$ V $U_{Low} < 0.5$ V
Edge interval	≥ 0.43 µs	≥ 0.43 µs
Sampling rate	≤ 300 kHz	≤ 300 kHz
Maximum speed	6000 rpm	6000 rpm
Transport/storage temperature range	–30 to +80 °C	–30 to +80 °C
Operating temperature range flange socket or fixed cable	–40 to +100 °C	–40 to +100 °C
Operating temperature range flexible cable	–10 to +100 °C	–10 to +100 °C
Degree of protection	IP66	IP66
Maximum admissible radial cantilever force	60 N	60 N
Maximum admissible axial force	40 N	40 N
Connection system	12-pin connector (mating connector is supplied)	
Certifications	CSA, UL	CSA, UL
Weight	0.3 kg	0.3 kg

© Siemens AG 2015

Overview

"Special technology" comprises rotary pulse encoders of 1LE1 motors (with the exception of 1LE1 with order code **F90** – version "Forced-air cooled motors without external fan and fan cover" and 1PC1).
1LE1 motors with order codes **F70** (mounting of separately driven fan), **F01** (mounting of holding brake (standard arrangement)) and **F01** + **F70** (mounting of brake and separately driven fan) from the modular mounting system can be combined with rotary pulse encoders LL 861 900 200, HOG9 D 1024 I and HOG 10 D 1024 I from the "Special technology" range.
The length of the motor increases by Δ l when the rotary pulse encoder is mounted. For an explanation of the additional dimensions and weights, please refer to "Technology", "Dimensions and weights" from Page 1/87.

The rotary pulse encoders of "Modular technology" and "Special technology" are fitted as standard with a protective cover made of non-corrosive sheet steel.

Note:

Start of delivery is planned for the options with order codes **G01** and **G02** for frame size 71 for the end of 2014.

For mounting of rotary pulse encoders with order codes **G01** and **G02** for frame sizes 80 to 315, a protective cover is supplied as standard, with order codes **G04**, **G05** and **G06** up to frame size 200.

For frame size 225 and above, a protective cover is not supplied as standard when rotary pulse encoders are mounted for order codes **G04**, **G05**, **G06**, **G07** and **G08**.

LL 861 900 220 rotary pulse encoder

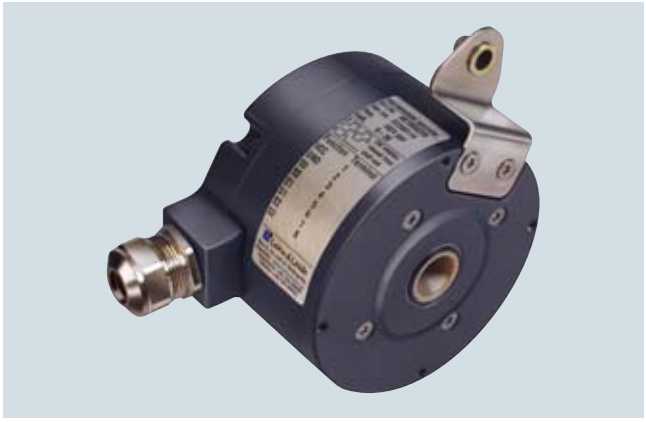

With its rugged construction, this rotary pulse encoder is also suitable for difficult operating environments. It is resistant to shock and vibration and has insulated bearings.

The LL 861 900 220 rotary pulse encoder can be supplied already mounted.
Order code **G04**

*The LL 861 900 220 rotary pulse encoder can be retrofitted. The motor must be prepared for this. When the motor is ordered, the option "Prepared for mountings, center hole only" order code **G40** or the option "Prepared for mountings with shaft **D16**" order code **G42** must be specified (see "Mechanical design and degrees of protection" on Page 1/44). The rotary pulse encoder is not part of the scope of supply in this case.*

The version of the rotary pulse encoder with a diagnostics system (ADS) can be supplied by Leine und Linde.

Manufacturer:
Leine und Linde (Germany) GmbH
Bahnhofstrasse 36
73430 Aalen, Germany
Tel. +49 (7361) 78093-0
Fax +49 (7361) 78093-11

www.leinelinde.com
E-mail: info@leinelinde.se

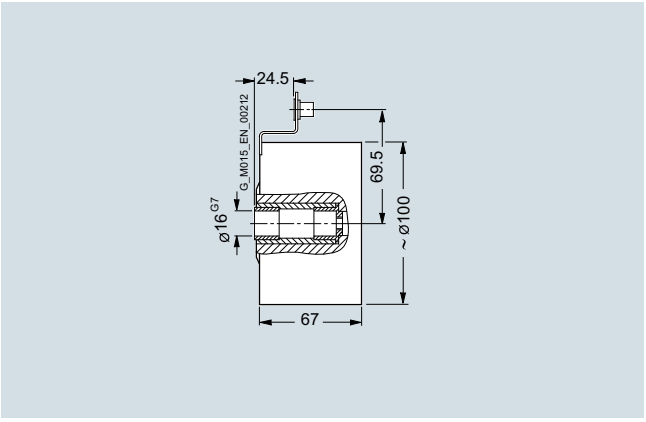

Mounting dimension of LL 861 900 220 rotary pulse encoder

Technical specifications for LL 861 900 220 (HTL version)

Mounting of encoder for temperatures below –20 °C and higher than +40 °C available on request.

Supply voltage U_B	**+9 V to +30 V**
Current input without load	max. 80 mA
Admissible load current per output	40 mA
Pulses per revolution	1024
Outputs	6 short-circuit proof square-wave pulses A, A', B, B', 0, 0'
Pulse offset between the two outputs	90° ±25° el.
Output amplitude	U_{High} > 20 V U_{Low} < 2.5 V
Mark space ratio	1:1 ±10 %
Edge steepness	50 V/µs (without load)
Maximum frequency	100 kHz for 350 m cable
Maximum speed	4000 rpm
Temperature range	–20 to +80 °C
Degree of protection	IP65
Maximum adm. radial cantilever force	300 N
Maximum adm. axial force	100 N
Connection system	Terminal strips in encoder cable connection M20 × 1.5 radial
Weight	Approx. 1.3 kg

© Siemens AG 2015

Overview (continued)

HOG9 D 1024 I rotary pulse encoder



The encoder is fitted with insulated bearings.

The HOG9 D 1024 I rotary pulse encoder can be supplied already mounted.
Order code **G05**

*The HOG9 D 1024 I rotary pulse encoder can be retrofitted. The motor must be prepared for this. When the motor is ordered, the option "Prepared for mountings, center hole only" order code **G40** or the option "Prepared for mountings with shaft **D16**" order code **G42** must be specified (see "Mechanical design and degrees of protection" on Page 1/44). The rotary pulse encoder is not part of the scope of supply in this case.*

Manufacturer:
Baumer Hübner GmbH
Max-Dohrn-Str. 2+4
10589 Berlin, Germany
Tel. +49 (30) 69003-0
Fax +49 (30) 69003-104

www.baumerhuebner.com
E-mail: info@baumerhuebner.com

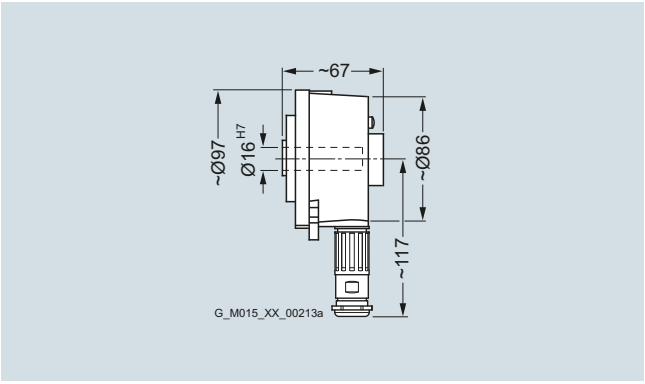

Mounting dimensions for HOG9 D 1024 I rotary pulse encoder

Technical specifications for HOG9 D 1024 I (HTL version)

Mounting of encoder for temperatures below –20 °C and higher than +40 °C available on request.

Supply voltage U_B	**+9 V to +30 V**
Current input without load	50 to 100 mA
Admissible load current per output	150 mA, 800 mA peak
Pulses per revolution	1024
Outputs	4 short-circuit proof square-wave pulses A, B and A', B'
Pulse offset between the two outputs	90° ±20 %
Output amplitude	$U_{High} \geq U_B - 3.5$ V $U_{Low} \leq 1.5$ V
Mark space ratio	1:1 ±20 %
Edge steepness	10 V/µs
Maximum frequency	120 kHz
Maximum speed	7000 rpm
Temperature range	–30 to +100 °C
Degree of protection	IP56
Maximum adm. radial cantilever force	150 N
Maximum adm. axial force	100 N
Connection system	Radial right-angle plug (mating connector is part of the scope of supply)
Mech. design acc. to Baumer Hübner Ident. No.	73 522 B
Weight	Approx. 0.9 kg

© Siemens AG 2015

Overview (continued)

POG9 rotary pulse encoder



The POG 9 rotary pulse encoder can be supplied already mounted.
Order code **G08**

The POG 9 rotary pulse encoder can be retrofitted. The motor must be prepared for this. When the motor is ordered, the option "Prepared for mountings, center hole only" order code **G40** *or the option "Prepared for mountings with shaft D16" order code* **G42** *must be specified (see "Mechanical design and degrees of protection" on Page 1/44). The rotary pulse encoder is not part of the scope of supply in this case.*

Manufacturer:
Baumer Hübner GmbH
Max-Dohrn-Str. 2+4
10589 Berlin, Germany
Tel. +49 (30) 69003-0
Fax +49 (30) 69003-104

www.baumerhuebner.com
E-mail: info@baumerhuebner.com

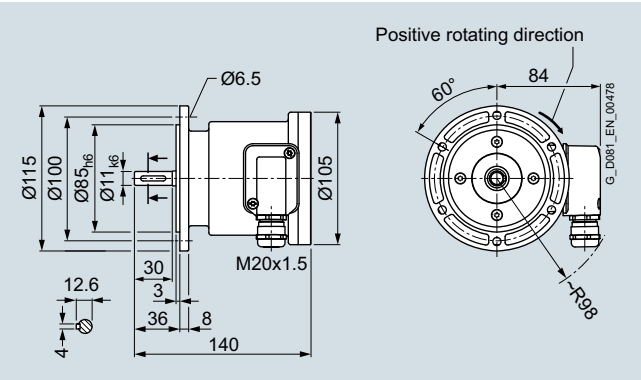

Mounting dimensions of POG 9 rotary pulse encoder

Technical specifications for POG 9

Supply voltage U_B	**+9 V to +30 V**	**+5V ±5 %**
Current input without load	< 100 mA	
Admissible load current per output	60 mA average value 300 mA peak	25 mA average value 75 mA peak
Pulses per revolution	300 … 2500	
Output amplitude	$U_{High} \geq U_B - 3.5$ V $U_{Low} \leq 1.5$ V	$U_{High} \geq 2.5$ V $U_{Low} \leq 0.5$ V
Mark space ratio	1:1 ±20 %	
Operating speed	≤ 12000 rpm	
Switching rate	120 kHz	
Temperature range	–30 to +100 °C	
Degree of protection	IP56	
Maximum adm. radial cantilever force	150 N	
Maximum adm. axial force	80 N	
Connection system	Terminal box	
Weight	Approx. 1.4 kg	

POG10 rotary pulse encoder



The POG 10 rotary pulse encoder can be supplied already mounted.
Order code **G07**

The POG 10 rotary pulse encoder can be retrofitted. The motor must be prepared for this. When the motor is ordered, the option "Prepared for mountings, center hole only" order code **G40** *or the option "Prepared for mountings with shaft D16" order code* **G42** *must be specified (see "Mechanical design and degrees of protection" on Page 1/44). The rotary pulse encoder is not part of the scope of supply in this case.*

Manufacturer:
Baumer Hübner GmbH
Max-Dohrn-Str. 2+4
10589 Berlin, Germany
Tel. +49 (30) 69003-0
Fax +49 (30) 69003-104

www.baumerhuebner.com
E-mail: info@baumerhuebner.com

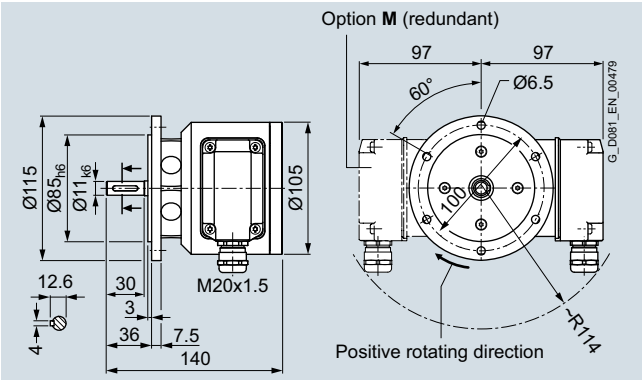

Mounting dimensions of POG 10 rotary pulse encoder

Technical specifications for POG 10

Supply voltage U_B	**+9 V to +30 V**	
Current input without load	< 100 mA	
Admissible load current per output	60 mA average value 300 mA peak	25 mA average value 75 mA peak
Pulses per revolution	300 … 2500	
Mark space ratio	40:60 … 60:40	
Operating speed	≤ 12000 rpm	
Switching rate	120 kHz	
Temperature range	–40 to +100 °C	
Degree of protection	IP66	
Maximum adm. radial cantilever force	≤ 450 N	
Maximum adm. axial force	≤ 300 N	
Connection system	Terminal box	
Weight	Approx. 1.9 kg	

© Siemens AG 2015

Overview (continued)

HOG10 D 1024 I rotary pulse encoder

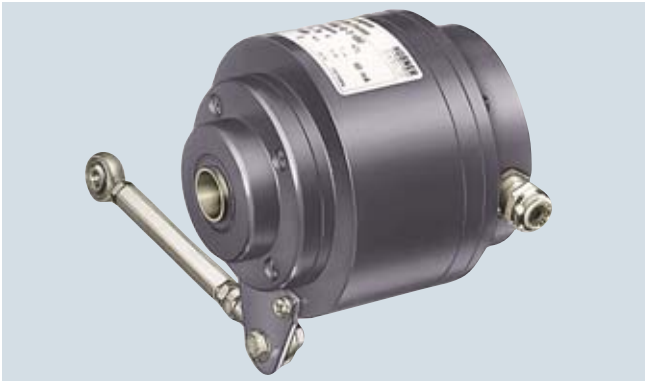

This encoder is extremely rugged and is therefore suitable for difficult operating conditions. It is fitted with insulated bearings.

The HOG10 D 1024 I rotary pulse encoder can be supplied already mounted.
Order code **G06**

*The HOG10 D 1024 I rotary pulse encoder can be retrofitted. The motor must be prepared for this. When the motor is ordered, the option "Prepared for mountings, center hole only" order code **G40** or the option "Prepared for mountings with shaft **D16**" order code **G42** must be specified (see "Mechanical design and degrees of protection" on Page 1/44). The rotary pulse encoder is not part of the scope of supply in this case. The letters FSL and ESL stand for the following terms:*
FSL: (mechanical) centrifugal switch
ESL: electronic speed switch
Both switch types are suitable for tripping the motor when a critical limit speed is reached, or for accelerating the motor along a control ramp into the permissible speed range again, or for shutting down the motor completely (depending on the customer application).
The electronic speed switch is particularly suitable for converter motor applications.
The critical limit speed to be monitored for the customer's application must be specified in the order.
Further settings might also be necessary. These settings will be made at the Baumer & Hübner factory according to customer specifications.

Manufacturer:
Baumer Hübner GmbH
Max-Dohrn-Str. 2+4
10589 Berlin, Germany
Tel. +49 (30) 69003-0
Fax +49 (30) 69003-104

www.baumerhuebner.com
E-mail: info@baumerhuebner.com

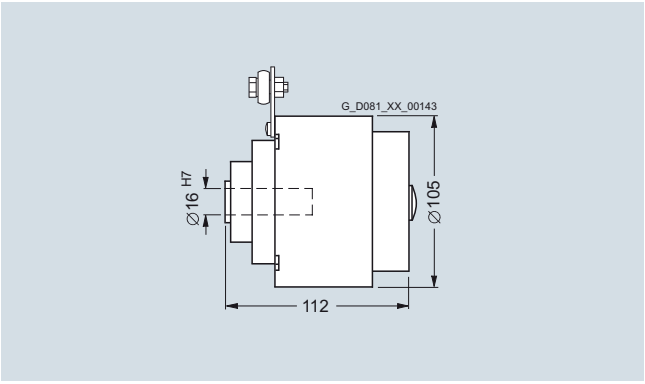

Mounting dimensions for HOG10 D 1024 I rotary pulse encoder

Technical specifications for HOG10 D 1024 I (HTL version)

Mounting of encoder for temperatures below –20 °C and higher than +40 °C available on request.

Supply voltage U_B	**+9 V to +30 V**
Current input without load	Approx. 100 mA
Admissible load current per output	600 mA, 300 mA peak
Pulses per revolution	1024
Outputs	4 short-circuit proof square-wave pulses A, B and A', B'
Pulse offset between the two outputs	90° ±20 %
Output amplitude	$U_{High} \geq U_B - 3.5$ V $U_{Low} \leq 1.5$ V
Mark space ratio	1:1 ±20 %
Edge steepness	10V/µs
Maximum frequency	120 kHz
Maximum speed	7000 rpm
Temperature range	–40 to +100 °C
Degree of protection	IP66
Maximum adm. radial cantilever force	150 N
Maximum adm. axial force	80 N
Connection system	Terminals, cable connection M20 × 1.5
Mech. design acc. to Baumer Hübner Ident. No.	74 055 B
Weight	Approx. 1.6 kg

© Siemens AG 2015

Overview (continued)

Dimensions and weights

Fig. 1 Brake
Order code **F01**
[optionally with manual release, order code **F50**]

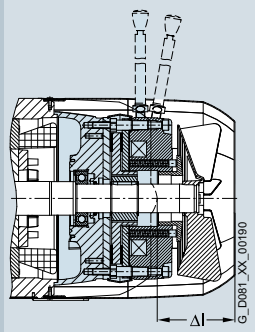

Fig. 2 Rotary pulse encoder (on cover)
Order code **G01/G02/G04/G05/G06**
[**G01**, **G02** protective cover as standard]

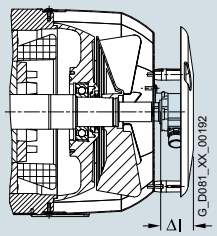

	Assignment									
	Fig. 1		**Fig. 2**							
Frame size	Brake		Rotary pulse encoder including protective cover							
			1XP8 012		**LL 861 900 220**		**HOG9 D 1024 I**		**HOG10 D 1024 I**	
	Order code		Order code		Order codes		Order codes		Order codes	
	F01		**G01, G02**		**G04**		**G05**		**G06**	
	Δl	Weight approx.	Δl	Weight approx.	Δl	Weight approx.	Δl	Weight approx.	Δl	Weight approx.
	mm	kg	mm	kg	mm	kg	mm	kg	mm	kg
1LE1										
80	60	3.5	68.5	0.7	–	–	–	–	–	–
90	77.5	5.3	68.5	0.7	–	–	–	–	–	–
100	81	5.9	56	0.9	83	1.9	83	1.5	126	2.2
112	88	7.8	56	0.8	83	1.9	83	1.5	126	2.2
132	114	11.9	60	1.3	87	2.4	87	2	130	2.7
160	130	30.7	60	1.5	87	2.7	87	2.3	130	3
180	126	28	90	2.1	90	2.3	90	1.9	127	2.6
200	137	38	90	2.3	90	2.5	90	2.1	127	2.8
225	135	63	87	0.9	135	2	135	1.6	135	2.3
250	225	83	87	0.9	135	2	135	1.6	135	2.3
280	297	118	87	0.9	135	2	135	1.6	135	2.3
315	313	256	87	0.9	135	2	135	1.6	135	2.3

	Assignment							
	Fig. 2							
Frame size	Rotary pulse encoder without protective cover							
	1XP8 012		**LL 861 900 220**		**HOG9 D 1024 I**		**HOG10 D 1024 I**	
	Order code		Order codes		Order codes		Order codes	
	G01, G02		**G04**		**G05**		**G06**	
	Δl	Weight approx.	Δl	Weight approx.	Δl	Weight approx.	Δl	Weight approx.
	mm	kg	mm	kg	mm	kg	mm	kg
1LE1								
225	65	0.3	75	1.3	75	0.9	116	1.6
250	65	0.3	75	1.3	75	0.9	116	1.6
280	65	0.3	75	1.3	75	0.9	116	1.6
315	65	0.3	75	1.3	75	0.9	116	1.6

© Siemens AG 2015

Overview (continued)

Fig. 3 Brake and rotary pulse encoder (on cover)
Order code **F01**
+ G01/G02/G04/G05/G06
[optionally with manual release,
order code **F50**;
G01, **G02** protective cover as standard]

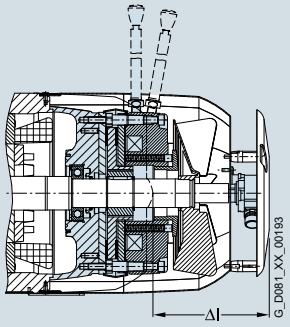

Fig. 4 Separately driven fan
Order code **F70**

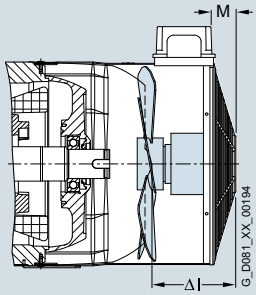

Frame sizes 100 to 200

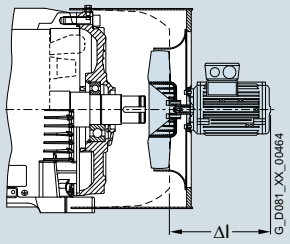

Frame sizes 225 to 315

	Assignment										
	Fig. 3								**Fig. 4**		
Frame size	Brake and rotary pulse encoder (on cover)								Separately driven fan		
	1XP8 012		**LL 861 900 220**		**HOG9 D 1024 I**		**HOG10 D 1024 I**				
	Order codes		Order codes		Order codes		Order codes		Order code		
	F01		**F01**		**F01**		**F01**		**F70**		
	+ G01/G02		**+ G04**		**+ G05**		**+ G06**				
	ΔI	Weight approx.	ΔI	Weight approx.	ΔI	Weight approx.	ΔI	Weight approx.	ΔI	M	Weight approx.
	mm	kg	mm	kg	mm	kg	mm	kg	mm	mm	kg
1LE1											
80	128.5	4.2	–	–	–	–	–	–	88	30	1.9
90	146	6	–	–	–	–	–	–	104	30	2.4
100	137	6.8	164	7.8	164	7.4	207	8.1	94	30	2.4
112	144	8.6	171	9.7	171	9.3	214	10	89	30	2.6
132	174	13.2	201	14.3	201	13.9	244	14.6	125	40	3.8
160	190	32.2	217	33.4	217	33	260	33.7	145.5	40	6.5
180	216	30.1	216	30.3	216	29.9	252	30.6	257	40	12
200	228	40.3	228	40.5	228	40.1	264	40.8	262	40	15
225	198	63.3	198	64.3	193	64.2	228	63.9	221	30	22
250	288	83.3	288	84.3	283	84.2	318	83.9	226	30	25
280	360	118.3	360	119.3	355	119.2	390	118.9	224	40	28
315	376	256.3	346	256.3	341	256.2	376	255.9	237	40	36

© Siemens AG 2015

Overview (continued)

Fig. 5 Brake and separately driven fan
Order code **F01 + F70**
[optionally with manual release, order code **F50**]

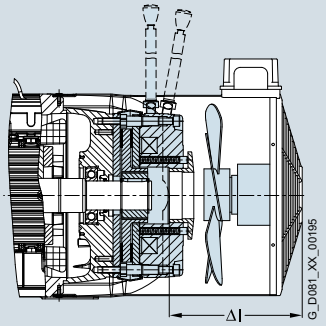

Frame sizes 100 to 200

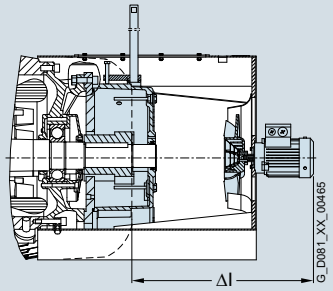

Frame sizes 225 to 315

Fig. 6 Rotary pulse encoder (under cover) and separately driven fan
Order code **F70**
+ G01/G02/G04/G05/G06

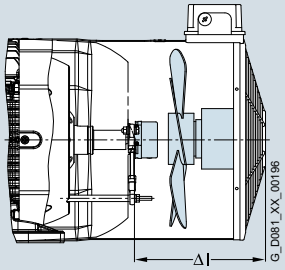

Frame sizes 100 to 200

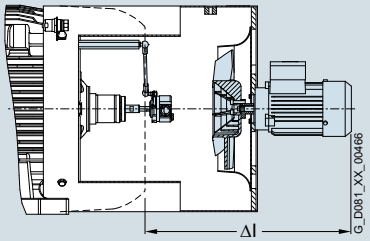

Frame sizes 225 to 315

	Assignment									
	Fig. 5		**Fig. 6**							
Frame size	Brake and separately driven fan		Separately driven fan and rotary pulse encoder (under cover)							
	Order codes		Order codes		Order codes		Order codes		Order codes	
	F01 + F70		**F70**		**F70**		**F70**		**F70**	
			+ G01/G02		**+ G04**		**+ G05**		**+ G06**	
	ΔI	Weight approx.	ΔI	Weight approx.	ΔI	Weight approx.	ΔI	Weight approx.	ΔI	Weight approx.
	mm	kg	mm	kg	mm	kg	mm	kg	mm	kg
1LE1										
80	161.5	5.4	161.5	2.6	–	–	–	–	–	–
90	174	7.7	174	3.1	–	–	–	–	–	–
100	169	8.3	169	3.3	169	4.3	169	3.9	204	4.6
112	164	10.4	164	3.4	164	4.5	164	4.1	199	4.8
132	195	15.7	195	5.1	195	6.2	195	5.8	250	6.5
160	216	37.2	216	8	216	9.2	216	8.8	281	9.5
180	257	40	257	14.4	257	14.3	257	13.9	257	14.6
200	262	53	262	17.3	262	17.5	262	17.1	262	17.8
225	563	87	410	25	410	26	410	26	410	26
250	580	110	425	27	425	28	425	28	425	28
280	541	149	431	30	431	31	431	31	431	31
315	540	296	434	41	434	42	434	42	434	42

© Siemens AG 2015

Overview (continued)

Fig. 7 Brake, rotary pulse encoder (under cover) and separately driven fan
Order code **F01 + F70**
+ G01/G02/G04/G05/G06
[optionally with manual release, order code **F50**]

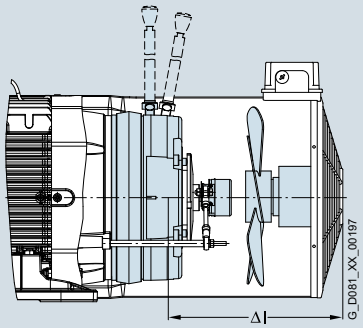

Frame sizes 100 to 200

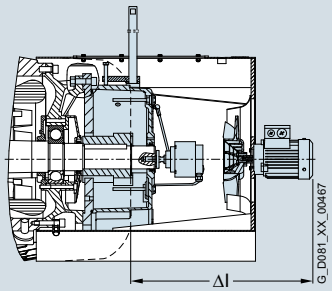

Frame sizes 225 to 315

Fig. 8 Protective cover for separately driven fan
Order code **H00**

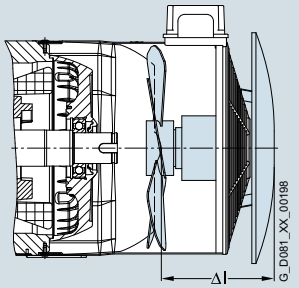

Frame sizes 100 to 200

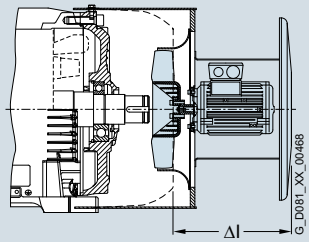

Frame sizes 225 to 315

Assignment

Frame size	**Fig. 7** Brake, separately driven fan and rotary pulse encoder (under cover)								**Fig. 8** Protective cover for separately driven fan		
	Order codes **F01 + F70 + G01/G02**		Order codes **F01 + F70 + G04**		Order codes **F01 + F70 + G05**		Order codes **F01 + F70 + G06**		Order code **H00**		
	ΔI	Weight approx.	ΔI	Weight approx.	ΔI	Weight approx.	ΔI	Weight approx.	ΔI	Weight approx.	Diameter of the fan cover
	mm	kg	mm	kg	mm	kg	mm	kg	mm	kg	mm
1LE1											
80	186.5	6.1	–	–	–	–	–	–	124.5	0.2	157
90	199	8.4	–	–	–	–	–	–	141.5	0.2	177
100	204	9.2	204	10.2	204	9.8	254	10.5	124	1.4	210
112	199	11.2	199	12.3	199	11.9	249	12.6	122	1.8	249
132	250	17	250	18.1	250	17.7	300	18.4	149	2.4	300
160	281	38.7	281	39.9	281	39.5	331	40.2	177	3	338
180	257	42.1	257	42.3	257	41.9	400	42.6	288	1.7	338
200	262	55.3	262	55.5	262	55.1	397	55.8	293	1.7	338
225	563	87.3	563	88.3	563	88.2	563	88.9	311	2.5	210
250	580	110.3	580	111.3	580	111.2	580	111.9	316	2.5	249
280	541	149.3	541	150.3	541	150.2	541	150.9	314	2.5	300
315	540	296.3	540	297.3	540	297.2	540	297.9	325	2.5	338

© Siemens AG 2015

Overview (continued)

Fig. 9 Prepared for mountings, center hole only
(for 2LM8 brake order code **F01** and/or encoder order code **G01/G02/G04/G05/G06**)
Order code **G40**
(up to frame size 160, standard with frame size 180 and above)

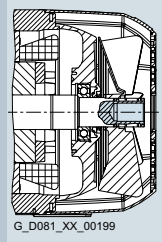

Fig. 10 Prepared for mountings with shaft D12/D16
order code **G41**/**G42**

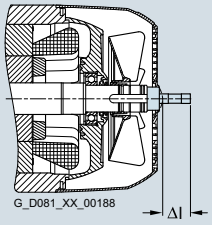

Frame size	**Assignment** **Fig. 9** Prepared for mountings, center hole only (for brake order code **F01** and/or encoder order code **G01**/**G02**/**G04**/**G05**/**G06**) order code **G40**		**Fig. 10** Prepared for mountings with shaft D12/D16 order code **G41**/**G42**			
	Order code **G40**		Order code **G41**		Order code **G42**	
	Δl	Weight approx.	Δl	Weight approx.	Δl	Weight approx.
	mm	kg	mm	kg	mm	kg
1LE1						
80	0	0	22	0.1	52	0.1
90	0	0	22	0.1	52	0.1
100	0	0	18.3	0.15	54.3	0.2
112	0	0	14.5	0.15	54.3	0.2
132	0	0.1	18.8	0.3	58.8	0.4
160	0	0.2	18.6	0.4	55.6	0.7
180	0	0	18	0.27	57	0.33
200	0	0	17	0.27	56	0.27
225	0	0	23	0.27	58	0.33
250	0	0	23	0.27	58	0.33
280	0	0	23	0.27	58	0.33
315	0	0	23	0.27	58	0.33

© Siemens AG 2015

Overview (continued)

Fig. 11 Standard protective cover for types of construction
Order code **H00**

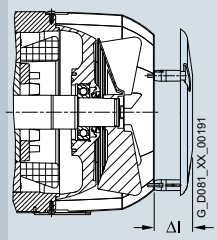

Fig. 12 Protective cover for textile industry
Order code **F75**

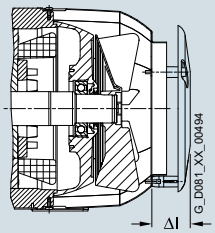

	Assignment			
	Fig. 11		**Fig. 12**	
Frame size	Protective cover		Protective cover	
	Order code		Order codes	
	H00		**F75**	
	Δl	Weight approx.	Δl	Weight approx.
	mm	kg	mm	kg
80	36	0.2	17	0.3
90	36	0.2	15	0.4
100	40	0.4	64	0.7
112	40	0.4	64	0.9
132	60	0.7	71	1.3
160	60	0.7	71	1.9
180	90	1.6	90	3.2
200	90	1.6	90	3.4
225	100	2.2	On request	On request
250	100	2.4	On request	On request
280	110	3.4	On request	On request
315	110	4	On request	On request

© Siemens AG 2015



2/2 Orientation
2/2 • Overview
2/3 • Benefits
2/4 • Application
2/5 • Technical specifications, more information
2/6 Converter operation
2/6 • Overview, benefits, application, technical specifications
2/7 Article number code

2/8 Motors with IE2 High Efficiency
Aluminum series
2/8 • 1LE1001 self-ventilated or forced-air cooled
2/11 • 1LE1001 self-ventilated with increased output
2/13 • 1LE1041 self-ventilated or forced-air cooled
2/14 • 1LE1041 self-ventilated or forced-air cooled with increased output
Cast-iron series
2/15 • 1LE1501/1LE1601 self-ventilated or forced-air cooled
2/19 • 1LE1501/1LE1601 self-ventilated with increased output
2/21 • 1LE1541 self-ventilated or forced-air cooled
2/23 • 1LE1541 self-ventilated or forced-air cooled with increased output

2/24 Motors with IE3 Premium Efficiency
Aluminum series
2/24 • 1LE1003 self-ventilated
2/27 • 1LE1003 self-ventilated with increased output
2/28 • 1LE1043 self-ventilated or forced-air cooled
2/29 • 1LE1043 self-ventilated or forced-air cooled with increased output
Cast-iron series
2/30 • 1LE1503/1LE1603 self-ventilated or forced-air cooled
2/33 • 1LE1503/1LE1603 self-ventilated with increased output
2/34 • 1LE1543/1LE1643 self-ventilated or forced-air cooled
2/36 • 1LE1543/1LE1643 self-ventilated with increased output

2/37 Motors with IE4 Super Premium Efficiency
2/37 Aluminum series 1LE1004 self-ventilated or forced-air cooled
2/38 Cast-iron series 1LE1504/1LE1604 self-ventilated or forced-air cooled

2/40 Motors with IE1 Standard Efficiency
Aluminum series
2/40 • 1LE1002 self-ventilated or forced-air cooled
2/41 • 1LE1002 self-ventilated with increased output

2/42 NEMA Energy Efficient motors
2/42 Aluminum series 1LE1021 self-ventilated or forced-air cooled
2/45 Cast-iron series 1LE1521/1LE1621 self-ventilated or forced-air cooled

2/49 NEMA Premium Efficient motors
2/49 Aluminum series 1LE1023 self-ventilated or forced-air cooled
2/51 Cast-iron series 1LE1523/1LE1623 self-ventilated or forced-air cooled

2/54 Pole-changing motors
Aluminum series
2/54 • 1LE1011 self-ventilated, const. load torque
2/55 • 1LE1011/1LE1012 self-ventilated, square-law load torque

2/57 Supplements to article numbers and special versions
2/57 Voltages
2/57 • Aluminum series 1LE10, 1PC10
2/59 • Aluminum series 1LE1011, 1PC1012
2/60 • Cast-iron series 1LE15, 1LE16
2/62 Types of construction
2/62 • Aluminum series 1LE10, 1PC10
2/66 • Cast-iron series 1LE15, 1LE16
2/70 Motor protection
2/70 • Aluminum series 1LE10, 1PC10
2/71 • Cast-iron series 1LE15, 1LE16
2/72 Terminal box position
2/72 • Aluminum series 1LE10, 1PC10
2/73 • Cast-iron series 1LE15, 1LE16
2/74 Options
2/74 • Aluminum series 1LE10, 1PC10
2/80 • Cast-iron series 1LE15, 1LE16
2/88 Accessories

2/89 Dimensions
2/89 Overall dimensions
2/91 Notes on the dimensions
2/91 Dimension sheet generator
Aluminum series
1LE1001, 1LE1002, 1LE1011, 1LE1012, 1LE1021 self-ventilated
2/92 • Frame sizes 100 L (80 M) to 200 L 1LE1001, 1LE1002 self-ventilated with increased output
2/94 • Frame sizes 80 M to 200 L 1LE1001, 1PC1001, 1LE1002, 1PC1002, 1LE1021 forced-air cooled/naturally cooled
2/96 • Frame sizes 80 M to 200 L 1LE1003, 1LE1023 self-ventilated
2/98 • Frame sizes 80 M to 90 L
2/100 • Frame sizes 100 L to 200 L 1LE1003 self-ventilated with increased output
2/102 • Frame sizes 100 L to 200 L 1LE1023, 1LE1043 forced-air cooled
2/104 • Frame sizes 80 M to 90 L
2/106 • Frame sizes 100 L to 200 L 1LE1004 self-ventilated
2/108 • Frame sizes 100 L to 160 L
Cast-iron series
1LE1501, 1LE1521, 1LE1541, 1LE1601, 1LE1621 self-ventilated
2/110 • Frame sizes 71 M to 160 L
2/112 • Frame sizes 180 M to 250 M
2/114 • Frame sizes 280 S to 315 L 1LE1503, 1LE1523, 1LE1543, 1LE1603, 1LE1623, 1LE1643 self-ventilated
2/116 • Frame sizes 71 M to 160 L
2/118 • Frame sizes 180 M to 315 L 1LE1504, 1LE1604 self-ventilated
2/120 • Frame sizes 100 L to 160 L
2/122 • Frame sizes 180 M to 315 L

© Siemens AG 2015

Overview

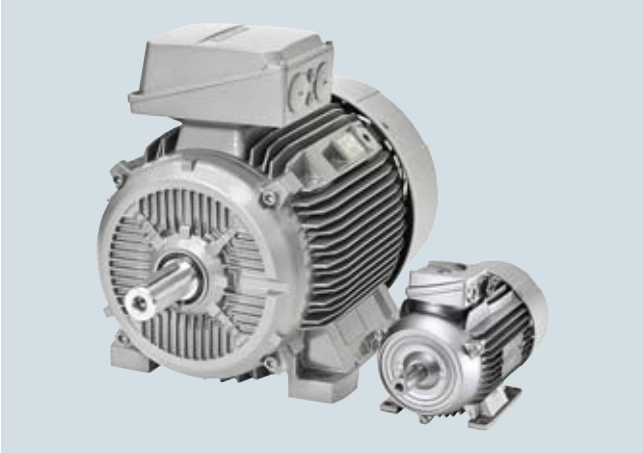

Increasing energy costs have resulted in greater emphasis on the power consumption of drive systems. It is extremely important to utilize the full potential for minimizing energy consumption here to secure competitiveness today and in the future. The environment will also profit from reduced energy consumption.

This is the reason that already today we are developing a new generation of low-voltage motors. Innovative rotors create the best requisites for motors with a high degree of efficiency. IE1 and IE2 motors with the same output have the same dimensions. The new motors for IE2, IE3 and IE4 offer considerable energy savings and protect our environment. We also consider environmental compatibility and sustainable use of resources during production. Potting compounds and coatings are, for example, solvent-free.

The modular mounting concept provides total flexibility. Each motor is based on a uniform concept for all markets worldwide. Our motors are manufactured according to the most advanced ecological standards.

The new 1LE1 family of motors is therefore one of the most compact in the world, because it is manufactured using innovative technology. For an optimized design, a compound of highly conductive materials is used in the rotor (up to frame size 200). This results in minimum rotor losses and an excellent starting and switching response.

The design of the 1LE1 motors ensures maximum flexibility and minimum installation costs. Users benefit from integral eyebolts, screw-on feet, reinforced bearing plates with optimum mechanical properties and easily accessible terminal boxes. Encoders, brakes and separately driven fans can also be added without any problems. Smaller inventories make stockkeeping easier, so motor suppliers can respond to customer requirements more quickly.

The 1LE1/1PC1 family of motors comprises two main series:

- SIMOTICS GP for general purpose applications:
  Motors with an aluminum housing

  SIMOTICS GP 1LE1/1PC1 motors with an aluminum housing are suitable for a wide range of standard drive tasks in the industrial environment. Thanks to their particular low weight, they are predestined for applications in pumps, fans and compressors. But they also reliably fulfill their tasks in conveyor systems and lifting gear.

Brief overview	
Output and voltage range:	0.3 ... 45 kW for all commonly used voltages
Frame sizes and types of construction:	80 ... 200 in all common types of construction
Rated speed:	750 ... 3600 rpm
Number of poles:	2, 4, 6, 8
Efficiency classes:	• IE1 (Standard Efficiency) • IE2 (High Efficiency) • IE3 (Premium Efficiency) • IE4 (Super Premium Efficiency) • NEE (NEMA Energy Efficient, according to NEMA MG, Table 12-11) • NPE (NEMA Premium Efficient, according to NEMA MG, Table 12-12)

- SIMOTICS SD for severe duty applications:
  Motors with cast-iron housing

  SIMOTICS SD 1LE1 motors with a cast-iron housing are extremely rugged and are therefore the first choice for applications under harsh environmental conditions. They master dust or vibration in mills and mixers as well as the corrosive atmosphere in the petrochemical industry. Their design supports optimized heat dissipation and offers the same handling as the general purpose variants.

Brief overview	
Output and voltage range:	0.18 ... 200 kW for all commonly used voltages
Frame sizes and types of construction:	71 ... 315 in all common types of construction
Rated speed:	750 ... 3600 rpm
Number of poles:	2, 4, 6, 8
Efficiency classes:	• IE1 (Standard Efficiency) • IE2 (High Efficiency) • IE3 (Premium Efficiency) • IE4 (Super Premium Efficiency) • NEE (NEMA Energy Efficient, according to NEMA MG, Table 12-11) • NPE (NEMA Premium Efficient, according to NEMA MG, Table 12-12)

© Siemens AG 2015

Overview (continued)

High efficiency energy-saving motors for a positive energy balance

Depending on requirements, energy-saving motors for a positive energy balance are available that are compliant with the legal requirements applicable in the European economic area in accordance with EU Directive 640/2009 as well as for the North American market in accordance with US federal law EISA (Energy Independence Security Act).

Motors with increased output and compact construction (1LE1)

Motors with increased output and compact construction can be used to advantage in confined spaces. For a slightly longer overall length, the output is at least as high as that of the next largest frame size. These compact motors are also optimized for efficiency. They are offered in IE2 and IE3 and therefore reduce operating costs.

Motors without fan cover and without external fan (1LE1 with order code F90)

Forced-air cooled motors with surface cooling without fan cover and without external fan are mainly used for driving fans.

Motors with reduced output without fan cover and without external fan (1PC1) [1)]

Naturally cooled motors with surface cooling without fan cover and without external fan are suitable for the following operating conditions:

- Types of duty with adequate cooling times (e.g. temporary duty for positioning drives)
- Environmental conditions that demand compact installation space (e.g. in motors with a stopping function)

Requirements which make an external fan disadvantageous, e.g. simple cleaning in the food industry, textile industry.

Preferred and Express motors

The most popular basic versions of motor series 1LE1 are available under special terms as so-called "Preferred motors". Most of the "Preferred motors" are also available with a shorter delivery time as so-called "Express motors".

The standard delivery time for "Express motors" is 1 to 2 days from the time of clarification of the order at the factory until dispatch from the factory. To determine the delivery date at the customer site, the appropriate shipping time must be added.

The complete range is covered by Price List D 81.1 P Part 1 "Preferred and Express Motors".

Benefits

There is considerable potential in the new 1LE1/1PC1 series of low-voltage motors. As a consistent further development of existing motors, the 1LE1/1PC1 motors offer numerous advantages.

Greater efficiency

Innovative rotor and manufacturing technology has been implemented for the IE1, IE2, IE3 and IE4 high efficiency motor variants.
The energy-efficient motors are therefore considerably more compact.

The SinaSave Webtool can be used to calculate the energy saving potential and life cycle costs of energy-efficient motors. SinaSave can be downloaded free of charge from the following website:
www.siemens.com/sinasave

The 1LE1 motors also impress customers with their extremely long life and their weight-optimized design has a positive effect on the stability of the equipment unit.

A wider range of applications

The motors are certified for worldwide use and satisfy high standards of quality (confirmed, for example, by CSA [2)], UL [3)], CQC [4)]).

Improved design

The optimized housing in modern EMC design has an attractive appearance and enhances functionality. The rotatable, accessible terminal boxes, integral eyebolts, screw-on feet and reinforced bearing plates ensure this.

Greater output

For the same frame size, the high-performance motors offer one complete rated output level more. We are also consistently implementing energy efficiency improvements here, too. The motors are offered (based on the categories of IEC 60034-30-1) in various efficiency classes.

More flexibility

The optimized design of the motors makes installation easier in general. Encoders, brakes and separately driven fans can be retrofitted easily. Terminal boxes and feet for flexible mounting can be selected. Smaller inventories make stockkeeping easier and motor suppliers can respond to customer requirements more quickly. Optimized manufacturing processes support fast availability. All motors up to 500 V can be operated either directly on the line or on the converter.

For general purpose applications: SIMOTICS GP motors with an aluminum housing

Particularly user friendly

The previously introduced, well-proven, obliquely partitioned terminal box is being implemented consistently throughout the entire motor series.

Special export line

For exporting to NAFTA, the Eagle Line is available. The motors are supplied with the electrical values stamped on the rating plate in accordance with EISA requirements.

1) Start of delivery ex stock planned for end of 2015.
2) Canadian Standard Association
3) Underwriters Laboratories Inc.
4) China Quality Certification

© Siemens AG 2015

Benefits (continued)

For severe duty applications:
SIMOTICS SD motors with a cast-iron housing

The right motor for various challenges

The following lines are available for severe duty applications:

- Basic Line (1LE15): rugged, reliable motors for machine construction
- Performance Line (1LE16): motors for the process industry with reinforced bearings and a rugged coating – for requirements that extend beyond the Basic Line
- "Eagle Line": motors for exporting to NAFTA; they fulfill the requirements of UL and CSA and are supplied with the electrical values stamped on the rating plate in accordance with EISA requirements

Comparison: Basic Line versus Performance Line

Function	Basic Line	Performance Line
Bearing size	62 (63 from frame size 280 upwards)	63
Relubrication	Optional (standard from frame size 280 upwards)	Standard from frame size 160 upwards (optional for frame size 100 to 132)
Paint system	Standard coating, corrosion class C2 [1]	Special coating, corrosion class C3 [1]
Drainage	Drain plugs	T drains
Rating plate	Plastic	Steel
Motor protection	Optional	PTC
Fan cover	Plastic	Steel
Warranty	12 months	36 months

Compact design

The size of a motor is often an important aspect in the case of machines. For this reason, the 1LE1 motors in IE2 and IE3 are no longer than their predecessors in the 1LG series in IE2.

Another highlight: some of the IE3 motors fit in the same housing as the IE2 motors. The efficiency classes naturally do not differ with regard to shaft height, so that the mechanical interface to the equipment unit remains the same. This also supports a largely problem-free efficiency upgrade to IE3 – without the need to adapt the mechanical design of a machine.

Greater output

In severe duty applications, increased output motors can also be the right solution if sufficient space is not available for a standard motor. Because these motors offer the same output in the next smallest frame size.

Application

As soon as the range of motors and options is complete, it will be possible to use the 1LE1/1PC1 motors from Siemens in all areas and sectors of industry due to their numerous options. They are suitable both for special environmental conditions such as those that predominate in the chemical or petrochemical industry as well as for most climatic requirements such as those of offshore applications.

Their large range of line voltages enables them to be used all over the world.

The wide field of implementation includes the following applications:

- Pumps
- Fans
- Compressors
- Conveyor systems such as cranes, belts and lifting gear
- High-bay warehouses
- Packaging machines
- Automation and drives
- Manufacturing industry
- General machine construction

Motors with a cast-iron housing are particularly suitable for the following severe duty applications:

- Petrochemical industry
- Pharmaceuticals
- Chemical industry
- Printing industry
- Process industry

[1] C2 and C3 are corrosion classes according to EN ISO 12944. The corrosion protection must be selected in accordance with the expected corrosiveness of the environment at the installation location as well as the required service life. Five corrosion classes are defined in the above-mentioned standard, ranging from a non-corrosive indoor atmosphere (C1) to a highly corrosive industrial or marine environment (C5 I and C5 M).

© Siemens AG 2015

Technical specifications

Overview of technical specifications

This table lists the most important technical specifications. For more information and details, see Catalog Section 1 "Introduction".

Type of motor	SIMOTICS GP/SD 1LE1/1PC1 IEC Low-Voltage Motors
Connection types	Star connection/delta connection The connection type to be used can be established from the Article No. supplements for the required motor.
Number of poles	2, 4, 6, 8
Frame sizes	71 M ... 315 L
Rated output	0.18 ... 200 kW (1LE1 motor series)/0.3 ... 9 kW (1PC1 motor series)
Frequencies	50 Hz and 60 Hz
Versions	Self-ventilated 1LE1 energy-saving motors with: • IE1 (Standard Efficiency) • IE2 (High Efficiency) • IE3 (Premium Efficiency) • IE4 (Super Premium Efficiency) • NEE (NEMA Energy Efficient, according to NEMA MG, Table 12-11) • NPE (NEMA Premium Efficient, according to NEMA MG, Table 12-12) Self-ventilated 1LE1 motors with increased output and: • IE1 (Standard Efficiency) • IE2 (High Efficiency) • IE3 (Premium Efficiency) Forced-air cooled 1LE1 motors without external fan and fan cover with: • IE1 (Standard Efficiency) • IE2 (High Efficiency) Naturally cooled 1PC1 motors without external fan and fan cover with: • IE1 (Standard Efficiency) • IE2 (High Efficiency)
Marking	IEC 60034-30-1 IE1, IE2, IE3: 2, 4 and 6-pole US Energy Independence Security Act EISA: 2, 4, 6 and 8-pole
Rated speed (synchronous speed)	750 ... 3000 rpm
Rated torque	1.0 ... 1703 Nm (1LE1 motor series)
Insulation of the stator winding in accordance with EN 60034-1 (IEC 60034-1)	Temperature class 155 (F), utilized acc. to temperature class 130 (B) (also for motors with increased output) DURIGNIT IR 2000 insulation system
Degree of protection according to EN 60034-5 (IEC 60034-5)	IP55 as standard
Cooling according to EN 60034-6 (IEC 60034-6)	• Self-ventilated (1LE1 motor series) frame size 80 M to 315 L (IC411), • Forced-air cooled (1LE1 motor series with order code **F90**) frame size 80 M to 200 L (IC416) • Naturally cooled (1PC1 motor series) frame size 100 L to 160 L (IC410)
Admissible coolant temperature and installation altitude	–20 ... +40 °C as standard, installation altitude up to 1000 m above sea level. See "Coolant temperature and installation altitude" in Catalog Section 1 "Introduction".
Standard voltages according to EN 60038 (IEC 60038)	50 Hz: 230 V, 400 V, 500 V, 690 V The voltage to be used can be found in the "Selection and ordering data" for the required motor.
Type of construction according to EN 60034-7 (IEC 60034-7)	• Without flange: IM B3, IM B6, IM B7, IM B8, IM V5 without protective cover, IM V6, IM V5 with protective cover • With flange: IM B5, IM V1, IM V3, IM B35 • With standard flange and special flange (next larger flange): IM B14, IM V19, IM V18, IM B34
Paint finish Suitability of paint finish for climate group according to IEC 60721, Part 2-1	Standard: color RAL 7030 stone gray See "Paint finish" in Catalog Section 1 "Introduction".
Vibration severity level according to EN 60034-14 (IEC 60034-14)	Level A (normal – without special vibration requirements) Optionally: level B (with special vibration requirements) See "Balance and vibration quantity" in Catalog Section 1 "Introduction".
Shaft extension according to DIN 748 (IEC 60072)	Balance type: half-key balancing as standard See "Balance and vibration quantity" in Catalog Section 1 "Introduction".
Sound pressure level according to EN ISO 1680 (tolerance +3 dB)	The sound pressure level is listed in the selection and ordering data for the required motor.
Weights	The weight is listed in the selection and ordering data for the required motor.
Modular mounting concept	Rotary pulse encoder, brake, separately driven fan or prepared for mountings
Consistent series concept	• Cast housing feet, screwed-on feet available as an option and retrofittable • Terminal box obliquely partitioned and rotatable through 4 x 90° • Bearings at DE and NDE are of identical design, reinforced bearings available as an option
Options	See "Supplements to article numbers and special versions"

More information

For further information, please get in touch with your local Siemens contact.

At:

www.siemens.com/automation/partner

you can find out about certain technologies through Siemens contact partners worldwide.

Wherever possible, you will find a local contact partner for:
- Technical support
- Spare parts/repairs
- Service
- Training
- Marketing & Sales
- Technical consultation/engineering

You start by selecting a:
- country
- product or
- sector.

By further specifying the remaining criteria you will find exactly the right contact partner with his/her respective expertise.

© Siemens AG 2015

Overview

Converter operation up to 500 V +10 % line voltage

The standard insulation of 1LE1 motors is designed such that converter operation is possible at line voltages up to $U_N \leq 500$ V. Compliance with the following limit values is essential (voltage values are peak values): $\hat{U}_{\text{phase-to-phase}} \leq 1500$ V, $\hat{U}_{\text{phase-to-ground}} \leq 1100$ V, voltage rise times of $t_s > 0.1$ µs. Operation of 1LE1 motors at higher voltage peaks (e.g. on converters with controlled input, e.g. AFE, ALM) requires motors with higher insulation resistance.
Please inquire in this case.

For motors with protruding connection cables (order codes R20, R21, R22, R23 and R24) please inquire in the case of converter operation.

During installation, the EMC guidelines must be complied with.

Note:

When motors are operated on SINAMICS converters additional losses occur which, depending on the admissible winding temperature, can make it necessary to reduce the torque. The admissible torque values can be obtained from the SIZER configuring tool. The lowest frequency specified there is 5 Hz. For stationary converter operation at lower frequencies, particularly in the case of frame sizes < 100, it is necessary to inquire at the Quotation Center.

Benefits

Motors operating with frequency converters offer the user numerous advantages.

The motors feature the future-oriented insulation system DURIGNIT IR 2000 (IR = Inverter Resistant). The DURIGNIT IR 2000 insulating system consists of high-quality enamel wires and insulating sheet materials in conjunction with temperature-resistant resin impregnation.

Application

The motors can be used in numerous drive applications with variable-speed drives when they are combined with converters from the MICROMASTER and SINAMICS spectrum.

The wide field of implementation includes the following applications:

- Conveyor systems such as cranes, belts and lifting gear
- High-bay warehouses
- Packaging machines
- Automation and drives

Their large range of line voltages enables them to be used all over the world.

Technical specifications

General note

All the data listed in the catalog is applicable for a 50 Hz line supply. With converter operation, the torque reduction factors for constant torque and drives for fans, pumps and compressors must be configured using the "SIZER for Siemens Drives" engineering tool. Higher noise levels must be expected at frequencies other than 50 Hz for motors operating with converters due to the harmonic content of the supply.

Mechanical limit speeds

When the motor is operated at its rated frequency, it is important to note that the maximum speeds are limited by the limits for the roller bearings, critical rotor speed and rigidity of the rotating parts (see Table on Page 1/50).

Motor protection

A motor protection function can be implemented using the I^2t sensing circuit implemented in the converter software.

If required, more precise motor protection can be afforded by direct temperature measurement using KTY-84 sensors or PTC thermistors in the motor winding. Some converters from Siemens determine the motor temperature using the resistance of the temperature sensor. They can be set to a required temperature for alarm and tripping.

Insulation

The insulation of 1LE motors is designed such that converter operation is possible at voltages up to 500 V +10 %. $\hat{U}_{\text{phase-to-phase}} \leq 1500$ V, $\hat{U}_{\text{phase-to-ground}} \leq 1100$ V, voltage rise times of $t_s > 0.1$ µs.

All motors with voltage codes 22 and 34 must be operated on a converter under these conditions. For converter operation with the outputs specified in the catalog, the motors are used according to temperature class 155 (F), i.e. in this case neither a service factor > 1 nor an increased coolant temperature is possible (order codes N01, N02 and N03 cannot be ordered).

© Siemens AG 2015

Selection and ordering data

The article number consists of a combination of digits and letters and is divided into three hyphenated blocks to provide a better overview, e.g.:
1LE1001-1DB22-2CB5-Z
H00

The first block (positions 1 to 7) identifies the motor type; the second block (positions 8 to 12) defines the motor frame size and length, the number of poles and in some cases the frequency/output; and in the third block (positions 13 to 16), the frequency/output, type of construction and other design features are encoded.

For deviations in the second and third block from the catalog codes, either **Z** or **90** should be used as appropriate.

Ordering data:

- Complete Article No. and order code(s) or plain text
- If a quotation has been requested, please specify the quotation number in addition to the Article No.
- When ordering a complete motor as a spare part, please specify the works serial No. for the previously supplied motor as well as the Article No.

Structure of the Article No.:	Position:	1	2	3	4	5	6	7	-	8	9	10	11	12	-	13	14	15	16	
Positions 1 to 4: Digit, letter, letter, digit	• Self-ventilated by fan mounted on and driven by rotor	**1**	**L**	**E**	**1**															
	• Forced-air cooled by air flow from the fan to be driven with option extension **F90**																			
	• Naturally cooled without external fan and fan cover [1]	**1**	**P**	**C**	**1**															
Position 5: Digit	Aluminum housing					**0**														
	Cast-iron housing Basic Line					**5**														
	Cast-iron housing Performance Line					**6**														
Positions 6 to 7: 2 digits	Motors with IE2 High Efficiency						**0**	**1**												
	APAC Line motors with IE2 High Efficiency						**4**	**1**												
	Motors with IE1 Standard Efficiency						**0**	**2**												
	Motors with IE3 Premium Efficiency						**0**	**3**												
	APAC Line motors with IE3 Premium Efficiency						**4**	**3**												
	Motors with IE4 Super Premium Efficiency						**0**	**4**												
	Pole-changing motors with one winding connected in Dahlander circuit						**1**	**1**												
	Pole-changing motors with two windings						**1**	**2**												
	NEMA Energy Efficient MG1 motors, Table 12-11 – Eagle Line						**2**	**1**												
	NEMA Premium Efficient MG1 motors, Table 12-12 – Eagle Line						**2**	**3**												
Positions 8, 9 and 11: Digit, letter, digit	**Motor frame size** (frame size as a combination of shaft height and overall length, encoded)									**0** ... **3**	**A** ... **E**		**0** ... **6**							
Position 10: Letter	**No. of poles** A: 2-pole, B: 4-pole, C: 6-pole, D: 8-pole, J: 4/2-pole const. load torque, L: 8/4-pole const. load torque, P: 4/2-pole square-law load torque, Q: 6/4-pole square-law load torque, R: 8/4-pole square-law Load torque											**A** ... **R**								
Positions 12 and 13: 2 digits	**Voltage, circuit and frequency** (encoded with two digits, 9-0 requires order code M.. (e. g. M1Y))													**0** ... **9**		**0** ... **8**				
Position 14: Letter	**Type of construction** (encoded with A ... V)																**A** ... **V**			
Position 15: Letter	**Motor protection** (encoded with A ... Z; Z requires order code Q.. (e. g. Q2A))																	**A** ... **Z**		
Position 16: Digit	**Terminal box position** 4: Terminal box top, 5: Terminal box right, 6: Terminal box left, 7: Terminal box below																		**4** ... **7**	
	Special order versions: encoded – additional order code required not encoded – additional plain text required																			- **Z**

Ordering example

Selection criteria	Requirement	Structure of the Article No.
Motor type 1LE1	Standard motor with IE2 High Efficiency, IP55 degree of protection, aluminum housing	**1LE1001-■■■■■-■■■■**
Motor frame size/No. of poles/Speed	160 M/4-pole/1500 rpm	**1LE1001-1DB2■-■■■■**
Rated output	11 kW	
Voltage and frequency	230 VΔ/400 VY, 50 Hz	**1LE1001-1DB22-2■■■**
Type of construction with special version	IM V5 with protective cover [2]	**1LE1001-1DB22-2C■■-Z** **H00**
Motor protection	Motor protection with PTC thermistor with 3 embedded temperature sensors for tripping	**1LE1001-1DB22-2CB■-Z** **H00**
Terminal box position	Terminal box right (viewed from DE)	**1LE1001-1DB22-2CB5-Z** **H00**

[1] 1PC1 naturally cooled motors in the power range 1.2 to 9 kW are available on request.

[2] Standard without protective cover – the protective cover is defined with order code **H00** and must be ordered in addition to the Article No. with **-Z** and this order code.

© Siemens AG 2015

2

Selection and ordering data

P_{rated}, 50 Hz	P_{rated}, 60 Hz [1]	Frame size	Operating values at rated output: n_{rated}, 50 Hz	T_{rated}, 50 Hz	IE class		η_{rated}, 50 Hz, 4/4	η_{rated}, 50 Hz, 3/4	η_{rated}, 50 Hz, 2/4	cos φ_{rated}, 50 Hz, 4/4	I_{rated}, 50 Hz, 400 V	T_{LR}/T_{rated}, 50 Hz	I_{LR}/I_{rated}, 50 Hz	T_B/T_{rated}, 50 Hz	L_{pfA}, 50 Hz	L_{WA}, 50 Hz	Aluminum series 1LE1001 – *IE2 version in accordance with IEC 60034-30* Article No.	$m_{IM\ B3}$	J	Torque class
kW	kW	FS	rpm	Nm	50 Hz	60 Hz	%	%	%		A				dB(A)	dB(A)	▲ New	kg	kgm^2	CL
• Cooling: self-ventilated (IC411) or with order code F90 forced-air cooled without external fan and fan cover (IC416)																				
• Efficiency: IE2 High Efficiency, service factor (SF) 1.15																				
• Insulation: thermal class 155 (temperature class F), IP55 degree of protection, utilization in accordance with thermal class 130 (temperature class B)																				
2-pole: 3000 rpm at 50 Hz, 3600 rpm at 60 Hz [1]																				
0.75	**0.86**	**80 M**	2805	2.6	IE2	IE2	77.4	77.9	74.4	0.84	1.67	1.9	4.9	2.3	60	71	**1LE1001-0DA2■-■■■■**	9	0.0008	16
1.1	**1.27**	**80 M**	2835	3.7	IE2	IE2	79.6	79.6	78.6	0.83	2.4	2.7	6	3.1	60	71	**1LE1001-0DA3■-■■■■**	11	0.0011	16
1.5	**1.75**	**90 S**	2885	5	IE2	IE2	81.3	81.3	80.3	0.84	3.15	2.7	6.9	3.6	65	77	**1LE1001-0EA0■-■■■■**	13	0.0017	16
2.2	**2.55**	**90 L**	2890	7.3	IE2	IE2	83.2	83.2	82.2	0.85	4.5	2.5	7.1	3.7	65	77	**1LE1001-0EA4■-■■■■**	15	0.0021	16
3	**3.45**	**100 L**	2905	9.9	IE2	IE2	84.6	84.6	83.6	0.84	6.1	2.3	7	3.3	67	79	**1LE1001-1AA4■-■■■■**	21	0.0044	16
4	**4.55**	**112 M**	2945	13	IE2	IE2	85.8	86.2	85.1	0.85	7.9	2.1	8	3.6	69	81	**1LE1001-1BA2■-■■■■**	27	0.0092	16
5.5	**6.3**	**132 S**	2950	18	IE2	IE2	87	87	86	0.87	10.5	1.8	6.6	2.9	68	80	**1LE1001-1CA0■-■■■■**	39	0.02	16
7.5	**8.6**	**132 S**	2950	24	IE2	IE2	88.1	88.1	87.1	0.87	14.1	2.2	7.5	3.1	68	80	**1LE1001-1CA1■-■■■■**	43	0.024	16
11	**12.6**	**160 M**	2955	36	IE2	IE2	89.4	89.4	88.4	0.87	20.5	2.1	7.4	3.2	70	82	**1LE1001-1DA2■-■■■■**	67	0.045	16
15	**17.3**	**160 M**	2955	48	IE2	IE2	90.3	90.3	89.3	0.88	27	2.4	7.6	3.4	70	82	**1LE1001-1DA3■-■■■■**	75	0.053	16
18.5	**21.3**	**160 L**	2955	60	IE2	IE2	90.9	90.9	89.9	0.88	33.5	2.9	7.9	3.6	70	82	**1LE1001-1DA4■-■■■■**	84	0.061	16
22	**24.5**	**180 M**	2940	71	IE2	IE2	91.3	91.8	91.4	0.87	40	2.7	7.4	3.6	77	84	▲ **1LE1001-1EA2■-■■■■**	123	0.069	16
30	**33.5**	**200 L**	2960	97	IE2	IE2	92	92.3	91.7	0.87	54	2.5	6.9	3.3	78	85	▲ **1LE1001-2AA4■-■■■■**	158	0.13	16
37	**41.5**	**200 L**	2960	119	IE2	IE2	92.5	92.8	92.3	0.88	66	2.7	7.4	3.5	78	85	▲ **1LE1001-2AA5■-■■■■**	178	0.15	16

Voltages				Motor protection	No. of poles	Frame size	Motor type	Version				Order code(s)
Frame sizes 80 M to 90 L [2]												
50 Hz	230 VΔ/400 VY	60 Hz [1]	460 VY	PTC thermistor with 1 temp. sensor	2	80 M ... 90 L	1LE1001-0D ... -0E	**Standard**	**2**	**2**		–
50 Hz	400 VΔ/690 VY	60 Hz [1]	460 VΔ		2	80 M ... 90 L	1LE1001-0D ... -0E	**Standard**	**3**	**4**		–
50 Hz	400 VY	60 Hz [1]	460 VY	Without	2	80 M ... 90 L	1LE1001-0D ... -0E	**Standard**	**0**	**2**		–
Frame sizes 100 L to 200 L: use of the 4 x 90° rotatable terminal box												
50 Hz	230 VΔ/400 VY	60 Hz [1]	460 VY	Any	2	100 L ... 200 L	1LE1001-1A ... -2A	**Standard**	**2**	**2**		–
50 Hz	400 VΔ/690 VY	60 Hz [1]	460 VΔ	Any	2	100 L ... 200 L	1LE1001-1A ... -2A	**Standard**	**3**	**4**		–
50 Hz	500 VY			Any	2	100 L ... 200 L	1LE1001-1A ... -2A	Without add. charge	**2**	**7**		–
50 Hz	500 VΔ			Any	2	100 L ... 200 L	1LE1001-1A ... -2A	Without add. charge	**4**	**0**		–
Further voltages [1]				For price information, code numbers, order codes and descriptions, see from Page 2/57					**9**	**0**		. . .

Types of construction		No. of poles	Frame size	Motor type	Version			Order code(s)
Without flange	IM B3 [3]	2	80 M ... 200 L	1LE1001-0D ... -2A	**Standard**		**A**	–
With flange	IM B5 [3]	2	80 M ... 200 L	1LE1001-0D ... -2A	With additional charge		**F**	–
With standard flange	IM B14 [3]	2	80 M ... 160 L	1LE1001-0D ... -2A	With additional charge		**K**	–
Further types of construction	For price information, code letters and descriptions, see from Page 2/62						■	. . .

Motor protection	No. of poles	Frame size	Motor type	Version			Order code(s)
Frame sizes 100 L to 200 L: use of the 4 x 90° rotatable terminal box							
Without	2	100 L ... 200 L	1LE1001-1A ... -2A	**Standard**		**A**	–
PTC thermistor with 3 temperature sensors	2	100 L ... 200 L	1LE1001-1A ... -2A	With additional charge		**B**	–
Further motor protection	For price information, code letters and descriptions, see from Page 2/70					■	. . .

Terminal box position	No. of poles	Frame size	Motor type	Version		Order code(s)
Terminal box at top	2	80 M ... 200 L	1LE1001-0D ... -2A	**Standard**	**4**	–
Further terminal box positions	For price information, code numbers and descriptions, see from Page 2/72					

Special versions	No. of poles	Frame size	Motor type			Order code(s)
Forced-air cooled motors without ext. fan/fan cover (IC416)	2	80 M ... 200 L	1LE1001-0D ... -2A	**1LE1001-. . . .■-■■■■**	**-Z**	**F90** +. . .+. . .+. . .
Options	For price information, order codes and descriptions, see from Page 2/74			**1LE1001-. . . .■-■■■■**	**-Z**	. . .+. . .+. . .+. . .

[1] Operating values at rated output for 60 Hz are stored in the Drive Technology (DT) Configurator.

[2] For converter operation of shaft heights 80 and 90, ordering with PTC thermistors and their connection to the converter is recommended.

[3] Types derived from IM B3 (IM B6/7/8, IM V6 and IM V5), from IM B5 (IM V3 and IM V1) and from IM B14 (IM V19 and IM V18) are possible, provided that no requirements exist for condensation drainage holes (**H03**) and stamping of the type on the rating plate. The basic type IM B3, IM B5 or IM B14 is stamped as standard on the rating plate. When ordering with condensation drainage holes (**H03**), the type must be specified.

© Siemens AG 2015

Selection and ordering data (continued)

P_{rated}, 50 Hz	P_{rated}, 60 Hz [1]	Frame size	Operating values at rated output: n_{rated}, 50 Hz	T_{rated}, 50 Hz	IE class		η_{rated}, 50 Hz, 4/4	η_{rated}, 50 Hz, 3/4	η_{rated}, 50 Hz, 2/4	cos φ_{rated}, 50 Hz, 4/4	I_{rated}, 50 Hz, 400 V	T_{LR}/T_{rated}, 50 Hz	I_{LR}/I_{rated}, 50 Hz	T_B/T_{rated}, 50 Hz	L_{pfA}, 50 Hz	L_{WA}, 50 Hz	Aluminum series 1LE1001 – *IE2 version in accordance with IEC 60034-30* Article No.	$m_{IM\ B3}$	J	Torque class
kW	kW	FS	rpm	Nm	50 Hz	60 Hz	%	%	%		A				dB(A)	dB(A)	▲ New	kg	kgm^2	CL
• Cooling: self-ventilated (IC411) or with order code F90 forced-air cooled without external fan and fan cover (IC416) • Efficiency: IE2 High Efficiency, service factor (SF) 1.15 • Insulation: thermal class 155 (temperature class F), IP55 degree of protection, utilization in accordance with thermal class 130 (temperature class B)																				
4-pole: 1500 rpm at 50 Hz, 1800 rpm at 60 Hz [1]																				
0.55	**0.63**	**80 M**	1440	3.6	–	–	78.1	78.6	75.6	0.74	1.37	2.2	5.3	3.1	53	64	**1LE1001-0DB2■-■■■■**	10	0.0017	16
0.75	**0.86**	**80 M**	1440	5	IE2	IE2	79.6	79.6	78.6	0.76	1.79	2.2	5.6	3.1	53	64	**1LE1001-0DB3■-■■■■**	11	0.0021	16
1.1	**1.27**	**90 S**	1425	7.4	IE2	IE2	81.4	81.4	80.4	0.78	2.5	2.3	5.6	2.9	56	68	**1LE1001-0EB0■-■■■■**	13	0.0028	16
1.5	**1.75**	**90 L**	1435	10	IE2	IE2	82.8	82.8	81.8	0.79	3.3	2.6	6.4	3.4	56	68	**1LE1001-0EB4■-■■■■**	16	0.0036	16
2.2	**2.55**	**100 L**	1455	14	IE2	IE2	84.3	84.3	83.3	0.81	4.65	2.1	6.9	3.3	60	72	**1LE1001-1AB4■-■■■■**	21	0.0086	16
3	**3.45**	**100 L**	1455	20	IE2	IE2	85.5	85.5	84.5	0.82	6.2	2	6.9	3.1	60	72	**1LE1001-1AB5■-■■■■**	25	0.011	16
4	**4.55**	**112 M**	1460	26	IE2	IE2	86.6	86.6	85.6	0.81	8.2	2.5	7.1	3.2	58	70	**1LE1001-1BB2■-■■■■**	29	0.014	16
5.5	**6.3**	**132 S**	1465	36	IE2	IE2	87.7	87.7	86.7	0.8	11.3	2.3	6.9	2.9	64	76	**1LE1001-1CB0■-■■■■**	42	0.027	16
7.5	**8.6**	**132 M**	1465	49	IE2	IE2	88.7	88.7	87.7	0.83	14.7	2.3	6.9	2.9	64	76	**1LE1001-1CB2■-■■■■**	49	0.034	16
11	**12.6**	**160 M**	1470	71	IE2	IE2	89.8	89.8	88.8	0.85	21	2.1	6.7	2.8	65	77	**1LE1001-1DB2■-■■■■**	71	0.065	16
15	**17.3**	**160 L**	1475	97	IE2	IE2	90.6	90.6	89.6	0.85	28	2.3	7.3	3	65	77	**1LE1001-1DB4■-■■■■**	83	0.083	16
18.5	**21.3**	**180 M**	1465	121	IE2	IE2	91.2	92	91.9	0.84	35	2.5	7.2	3.4	61	74	▲ **1LE1001-1EB2■-■■■■**	128	0.12	16
22	**25.3**	**180 L**	1465	143	IE2	IE2	91.6	92.2	91.9	0.84	41.5	2.6	7.3	3.5	69	76	▲ **1LE1001-1EB4■-■■■■**	132	0.13	16
30	**34.5**	**200 L**	1470	195	IE2	IE2	92.3	92.8	92.6	0.84	56	2.5	6.7	3.3	70	77	▲ **1LE1001-2AB5■-■■■■**	173	0.2	16

Voltages				Motor protection	No. of poles	Frame size	Motor type	Version				Order code(s)
Frame sizes 80 M to 90 L [2]												
50 Hz	230 VΔ/400 VY	60 Hz [1]	460 VY	PTC thermistor with 1 temp. sensor	4	80 M ... 90 L	1LE1001-0D ... -0E	**Standard**	**2**	**2**		–
50 Hz	400 VΔ/690 VY	60 Hz [1]	460 VΔ		4	80 M ... 90 L	1LE1001-0D ... -0E	**Standard**	**3**	**4**		–
50 Hz	400 VY	60 Hz [1]	460 VY	Without	4	80 M ... 90 L	1LE1001-0D ... -0E	**Standard**	**0**	**2**		–
Frame sizes 100 L to 200 L: use of the 4 x 90° rotatable terminal box												
50 Hz	230 VΔ/400 VY	60 Hz [1]	460 VY	Any	4	100 L ... 200 L	1LE1001-1A ... -2A	**Standard**	**2**	**2**		–
50 Hz	400 VΔ/690 VY	60 Hz [1]	460 VΔ	Any	4	100 L ... 200 L	1LE1001-1A ... -2A	**Standard**	**3**	**4**		–
50 Hz	500 VY			Any	4	100 L ... 200 L	1LE1001-1A ... -2A	Without add. charge	**2**	**7**		–
50 Hz	500 VΔ			Any	4	100 L ... 200 L	1LE1001-1A ... -2A	Without add. charge	**4**	**0**		–
Further voltages [1]				For price information, code numbers, order codes and descriptions, see from Page 2/57					**9**	**0**		. . .

Types of construction		No. of poles	Frame size	Motor type	Version			Order code(s)
Without flange	IM B3 [3]	4	80 M ... 200 L	1LE1001-0D ... -2A	**Standard**	**A**		–
With flange	IM B5 [3]	4	80 M ... 200 L	1LE1001-0D ... -2A	With additional charge	**F**		–
With standard flange	IM B14 [3]	4	80 M ... 160 L	1LE1001-0D ... -2A	With additional charge	**K**		–
Further types of construction	For price information, code letters and descriptions, see from Page 2/62					■		. . .

Motor protection	No. of poles	Frame size	Motor type	Version			Order code(s)
Frame sizes 100 L to 200 L: use of the 4 x 90° rotatable terminal box							
Without	4	100 L ... 200 L	1LE1001-1A ... -2A	**Standard**		**A**	–
PTC thermistor with 3 temperature sensors	4	100 L ... 200 L	1LE1001-1A ... -2A	With additional charge		**B**	–
Further motor protection	For price information, code letters and descriptions, see from Page 2/70					■	. . .

Terminal box position	No. of poles	Frame size	Motor type	Version		Order code(s)
Terminal box at top	4	80 M ... 200 L	1LE1001-0D ... -2A	**Standard**	**4**	–
Further terminal box positions	For price information, code numbers and descriptions, see from Page 2/72					

Special versions	No. of poles	Frame size	Motor type			Order code(s)
Forced-air cooled motors without ext. fan/fan cover (IC416)	4	80 M ... 200 L	1LE1001-0D ... -2A	**1LE1001- . . . . ■-■■■■**	**-Z**	**F90** +. . .+. . .+. . .
Options	For price information, order codes and descriptions, see from Page 2/74			**1LE1001- . . . . ■-■■■■**	**-Z**	. . .+. . .+. . .+. . .

[1] Operating values at rated output for 60 Hz are stored in the Drive Technology (DT) Configurator.

[2] For converter operation of shaft heights 80 and 90, ordering with PTC thermistors and their connection to the converter is recommended.

[3] Types derived from IM B3 (IM B6/7/8, IM V6 and IM V5), from IM B5 (IM V3 and IM V1) and from IM B14 (IM V19 and IM V18) are possible, provided that no requirements exist for condensation drainage holes (**H03**) and stamping of the type on the rating plate. The basic type IM B3, IM B5 or IM B14 is stamped as standard on the rating plate. When ordering with condensation drainage holes (**H03**), the type must be specified.

© Siemens AG 2015

Selection and ordering data (continued)

Operating values at rated output																Aluminum series			
P_{rated}, 50 Hz	P_{rated}, 60 Hz [1]	Frame size	n_{rated}, 50 Hz	T_{rated}, 50 Hz	IE class 50 Hz	IE class 60 Hz	η_{rated}, 50 Hz, 4/4	η_{rated}, 50 Hz, 3/4	η_{rated}, 50 Hz, 2/4	cos φ_{rated}, 50 Hz, 4/4	I_{rated}, 50 Hz, 400 V	T_{LR}/T_{rated}, 50 Hz	I_{LR}/I_{rated}, 50 Hz	T_B/T_{rated}, 50 Hz	L_{pfA}, 50 Hz	L_{WA}, 50 Hz	1LE1001 – *IE2 version in accordance with IEC 60034-30* Article No.	$m_{IM\ B3}$	J	Torque class
kW	kW	FS	rpm	Nm			%	%	%		A				dB(A)	dB(A)	▲ New	kg	kgm^2	CL
• Cooling: self-ventilated (IC411) or with order code F90 forced-air cooled without external fan and fan cover (IC416) • Efficiency: IE2 High Efficiency, service factor (SF) 1.15 • Insulation: thermal class 155 (temperature class F), IP55 degree of protection, utilization in accordance with thermal class 130 (temperature class B)																			
6-pole: 1000 rpm at 50 Hz, 1200 rpm at 60 Hz [1]																			
0.37	0.43	80 M	925	3.85	–	–	71.4	71.5	66.5	0.69	1.09	2.1	4	2.4	42	53	1LE1001-0DC2■-■■■■	9	0.0017	16
0.55	0.63	80 M	935	5.6	–	–	74	74	70.5	0.66	1.63	2.5	4.4	2.9	42	53	1LE1001-0DC3■-■■■■	12	0.0025	16
0.75	0.86	90 S	925	7.7	IE2	IE2	75.9	76	73	0.7	2.05	2	4.1	2.5	43	55	1LE1001-0EC0■-■■■■	13	0.003	16
1.1	1.27	90 L	935	11	IE2	IE1	78.1	78.5	75	0.7	2.9	2.2	4.4	2.6	43	55	1LE1001-0EC4■-■■■■	16	0.004	16
1.5	1.75	100 L	970	15	IE2	IE2	79.8	80.5	79	0.73	3.7	2	5.4	2.8	59	71	1LE1001-1AC4■-■■■■	25	0.011	16
2.2	2.55	112 M	965	22	IE2	IE2	81.8	82.6	81.4	0.75	5.2	2	5	2.8	62	74	1LE1001-1BC2■-■■■■	29	0.014	16
3	3.45	132 S	970	30	IE2	IE2	83.3	83.4	80.9	0.72	7.2	1.6	5	2.5	63	75	1LE1001-1CC0■-■■■■	38	0.024	13
4	4.55	132 M	970	39	IE2	IE2	84.6	85.5	84.5	0.75	9.1	1.6	5	2.3	63	75	1LE1001-1CC2■-■■■■	43	0.029	13
5.5	6.3	132 M	970	54	IE2	IE2	86	87	86.5	0.76	12.1	1.9	5.6	2.6	63	75	1LE1001-1CC3■-■■■■	52	0.037	16
7.5	8.6	160 M	975	73	IE2	IE2	87.2	88	87.3	0.74	16.8	1.9	4.7	2.2	67	79	1LE1001-1DC2■-■■■■	77	0.075	16
11	12.6	160 L	975	108	IE2	IE2	88.7	89.6	89.2	0.76	23.5	1.9	4.8	2.2	67	79	1LE1001-1DC4■-■■■■	93	0.098	16
15	18	180 L	975	147	IE2	IE2	89.7	90.1	89.5	0.78	31	2.5	6	3.1	57	70	▲ 1LE1001-1EC4■-■■■■	121	0.17	16
18.5	22	200 L	978	181	IE2	IE1	90.4	91.3	91.2	0.82	36	2.4	5.8	2.6	63	76	▲ 1LE1001-2AC4■-■■■■	151	0.25	16
22	26.5	200 L	978	215	IE2	IE1	90.9	91.6	91.2	0.82	42.5	2.5	6.2	2.6	63	76	▲ 1LE1001-2AC5■-■■■■	173	0.3	16
8-pole: 750 rpm at 50 Hz, 900 rpm at 60 Hz [1]																			
0.75	0.86	100 L	705	10	IE2	IE2	66.2	66.2	62	0.61	2.7	1.5	3.2	2.1	60	72	1LE1001-1AD4■-■■■■	21	0.0086	13
1.1	1.27	100 L	695	15	IE2	IE2	70.8	72.3	70.2	0.65	3.45	1.4	3.2	1.9	60	72	1LE1001-1AD5■-■■■■	25	0.011	13
1.5	1.75	112 M	725	20	IE2	IE2	74.1	74.1	71	0.63	4.65	1.6	4	2.4	63	75	1LE1001-1BD2■-■■■■	34	0.017	13
2.2	2.55	132 S	725	29	IE2	IE2	77.6	78.2	76.6	0.62	6.6	1.4	3.5	2	63	75	1LE1001-1CD0■-■■■■	46	0.034	10
3	3.45	132 M	720	40	IE2	IE1	80	80.7	79.2	0.62	8.7	1.4	3.7	2	63	75	1LE1001-1CD2■-■■■■	52	0.037	10
4	4.55	160 M	730	52	IE2	IE2	81.9	82.6	81.7	0.67	10.5	1.6	3.7	1.9	63	75	1LE1001-1DD2■-■■■■	69	0.065	13
5.5	6.3	160 M	730	72	IE2	IE2	83.8	84.3	83.1	0.67	14.1	1.7	3.9	2	63	75	1LE1001-1DD3■-■■■■	82	0.083	13
7.5	8.6	160 L	725	99	IE2	IE2	85.3	86.5	86.1	0.7	18.1	1.6	3.8	1.9	63	75	1LE1001-1DD4■-■■■■	94	0.098	13
11	13.2	180 L	720	146	–	–	86.6	87.6	87.1	0.7	26	2.3	4.9	2.6	72	80	▲ 1LE1001-1ED4■-■■■■	122	0.195	13
15	18	200 L	718	200	–	–	88.9	90.8	91.2	0.76	32	2.4	5.4	2.8	58	65	▲ 1LE1001-2AD5■-■■■■	172	0.344	13

Voltages					No. of poles	Frame size	Motor type	Version				Order code(s)
Frame sizes 80 M to 90 L [2]												
50 Hz	230 VΔ/400 VY	60 Hz [1]	460 VY	PTC thermistor with 1 temp. sensor	6	80 M ... 90 L	1LE1001-0D ... -0E	**Standard**	2	2		–
50 Hz	400 VΔ/690 VY	60 Hz [1]	460 VΔ		6	80 M ... 90 L	1LE1001-0D ... -0E	**Standard**	3	4		–
50 Hz	400 VY	60 Hz [1]	460 VY	Without	6	80 M ... 90 L	1LE1001-0D ... -0E	**Standard**	0	2		–
Frame sizes 100 L to 200 L: use of the 4 x 90° rotatable terminal box												
50 Hz	230 VΔ/400 VY	60 Hz [1]	460 VY		6, 8	100 L ... 200 L	1LE1001-1A ... -2A	**Standard**	2	2		–
50 Hz	400 VΔ/690 VY	60 Hz [1]	460 VΔ		6, 8	100 L ... 200 L	1LE1001-1A ... -2A	**Standard**	3	4		–
50 Hz	500 VY				6, 8	100 L ... 200 L	1LE1001-1A ... -2A	Without add. charge	2	7		–
50 Hz	500 VΔ				6, 8	100 L ... 200 L	1LE1001-1A ... -2A	Without add. charge	4	0		–
Further voltages [1]				For price information, code numbers, order codes and descriptions, see from Page 2/57					9	0		. . .

Types of construction			No. of poles	Frame size	Motor type	Version				Order code(s)
Without flange	IM B3 [3]		6, 8	80 M ... 200 L	1LE1001-0D ... -2A	**Standard**			A	–
With flange	IM B5 [3]		6, 8	80 M ... 200 L	1LE1001-0D ... -2A	With additional charge			F	–
With standard flange	IM B14 [3]		6, 8	80 M ... 160 L	1LE1001-0D ... -2A	With additional charge			K	–
Further types of construction		For price information, code letters and descriptions, see from Page 2/62							■	. . .

Motor protection		No. of poles	Frame size	Motor type	Version				Order code(s)
Frame sizes 100 L to 200 L: use of the 4 x 90° rotatable terminal box									
Without		6, 8	100 L ... 200 L	1LE1001-1A ... -2A	**Standard**			A	–
PTC thermistor with 3 temperature sensors		6, 8	100 L ... 200 L	1LE1001-1A ... -2A	With additional charge			B	–
Further motor protection	For price information, code letters and descriptions, see from Page 2/70							■	. . .

Terminal box position		No. of poles	Frame size	Motor type	Version				Order code(s)
Terminal box at top		6, 8	80 M ... 200 L	1LE1001-0D ... -2A	**Standard**			4	–
Further terminal box positions	For price information, code numbers and descriptions, see from Page 2/72								

Special versions		No. of poles	Frame size	Motor type		Order code(s)
Forced-air cooled motors without ext. fan/fan cover (IC416)		6, 8	80 M ... 200 L	1LE1001-0D ... -2A	1LE1001-. . . . ■-■■■■-Z	F90 +. . .+. . .+. . .
Options	For price information, order codes and descriptions, see from Page 2/74				1LE1001-. . . . ■-■■■■-Z	. . .+. . .+. . .+. . .

[1] Operating values at rated output for 60 Hz are stored in the Drive Technology (DT) Configurator.

[2] For converter operation of shaft heights 80 and 90, ordering with PTC thermistors and their connection to the converter is recommended.

[3] Types derived from IM B3 (IM B6/7/8, IM V6 and IM V5), from IM B5 (IM V3 and IM V1) and from IM B14 (IM V19 and IM V18) are possible, provided that no requirements exist for condensation drainage holes (**H03**) and stamping of the type on the rating plate. The basic type IM B3, IM B5 or IM B14 is stamped as standard on the rating plate. When ordering with condensation drainage holes (**H03**), the type must be specified.

© Siemens AG 2015

Selection and ordering data

P_{rated}, 50 Hz	P_{rated}, 60 Hz [1]	Frame size	n_{rated}, 50 Hz	T_{rated}, 50 Hz	IE class		η_{rated}, 50 Hz, 4/4	η_{rated}, 50 Hz, 3/4	η_{rated}, 50 Hz, 2/4	cos φ_{rated}, 50 Hz, 4/4	I_{rated}, 50 Hz, 400 V	T_{LR}/T_{rated}, 50 Hz	I_{LR}/I_{rated}, 50 Hz	T_B/T_{rated}, 50 Hz	L_{pfA}, 50 Hz	L_{WA}, 50 Hz	Aluminum series 1LE1001 – *IE2 version in accordance with IEC 60034-30 with increased output* Article No.	$m_{IM\ B3}$	J	Torque class
kW	kW	FS	rpm	Nm	50 Hz	60 Hz	%	%	%		A				dB(A)	dB(A)	▲ New	kg	kgm²	CL
• Cooling: self-ventilated (IC411) • Efficiency: IE2 High Efficiency, service factor (SF) 1.15 • Insulation: thermal class 155 (temperature class F), IP55 degree of protection, utilization in accordance with thermal class 130 (temperature class B)																				
2-pole: 3000 rpm at 50 Hz, 3600 rpm at 60 Hz [1]																				
1.5	1.75	80 M	2830	5.1	IE2	IE2	81.3	83.3	83.7	0.85	3.15	2.6	6.1	2.8	60	71	▲ 1LE1001-0DA6■-■■■■	11	0.0013	16
3	3.45	90 L	2895	9.9	IE2	IE2	84.6	85.5	84.8	0.86	6	3.4	7.9	3.6	65	77	▲ 1LE1001-0EA6■-■■■■	15	0.0031	16
4	4.55	100 L	2905	13	IE2	IE2	85.8	85.8	84.8	0.86	7.8	2.5	7.6	3.5	67	79	1LE1001-1AA6■-■■■■	26	0.0054	16
5.5	6.3	112 M	2945	18	IE2	IE2	87	87.8	87.4	0.88	10.4	2.3	8.5	3.8	69	81	1LE1001-1BA6■-■■■■	34	0.012	16
11	12.6	132 M	2950	36	IE2	IE2	89.4	89.4	88.4	0.89	20	2.3	7.9	3.2	68	80	1LE1001-1CA6■-■■■■	57	0.031	16
22	25.3	160 L	2955	71	IE2	IE2	91.3	91.3	90.3	0.89	39	3.1	8.4	3.7	70	82	1LE1001-1DA6■-■■■■	94	0.068	16
30	33.5	180 L	2940	97.4	IE2	IE2	92	92.5	92.2	0.89	53	2.3	7.8	3.4	76	83	▲ 1LE1001-1EA6■-■■■■	139	0.094	16
45	51	200 L	2950	145.7	IE2	IE2	92.9	93.4	93.1	0.87	81	2.5	7.1	3.2	77	84	▲ 1LE1001-2AA6■-■■■■	194	0.176	16
4-pole: 1500 rpm at 50 Hz, 1800 rpm at 60 Hz [1]																				
1.1	1.27	80 M	1440	7.3	IE2	IE2	81.4	82.2	80.9	0.78	2.5	2.4	6.1	3	53	64	▲ 1LE1001-0DB6■-■■■■	11	0.0029	16
2.2	2.55	90 L	1425	15	IE2	IE1	84.3	85.6	85.2	0.81	4.65	2.8	6.1	3.1	56	68	▲ 1LE1001-0EB6■-■■■■	16	0.0049	16
4	4.55	100 L	1460	26	IE2	IE2	86.6	86.6	85.6	0.8	8.3	2.2	7.5	3.5	60	72	1LE1001-1AB6■-■■■■	30	0.014	16
5.5	6.3	112 M	1460	36	IE2	IE2	87.7	87.7	86.7	0.81	11.2	2.5	7.1	3.2	58	70	1LE1001-1BB6■-■■■■	34	0.017	16
11	12.6	132 M	1465	72	IE2	IE2	89.8	89.8	88.8	0.84	21	2.6	7.7	3.1	64	76	1LE1001-1CB6■-■■■■	64	0.046	16
18.5	21.3	160 L	1475	120	IE2	IE2	91.2	91.2	90.2	0.85	34.5	2.5	7.7	3.3	65	77	1LE1001-1DB6■-■■■■	100	0.099	16
30	34.5	180 L	1465	195.5	IE2	IE2	92.3	93	92.9	0.81	58	2.5	7.3	3.3	70	77	▲ 1LE1001-1EB6■-■■■■	148	0.159	16
37	42.5	200 L	1470	240.4	IE2	IE2	92.7	93.6	93.8	0.84	69	2.4	7	3	68	75	▲ 1LE1001-2AB6■-■■■■	189	0.246	16

Voltages				No. of poles	Frame size	Motor type	Version					Order code(s)
Frame sizes 80 M to 90 L [2]												
50 Hz 230 VΔ/400 VY	60 Hz [1]	460 VY	PTC thermistor with 1 temp. sensor	2, 4	80 M ... 90 L	1LE1001-0D ... -0E	**Standard**	2	2			–
50 Hz 400 VΔ/690 VY	60 Hz [1]	460 VΔ		2, 4	80 M ... 90 L	1LE1001-0D ... -0E	**Standard**	3	4			–
50 Hz 400 VY	60 Hz [1]	460 VY	Without	2, 4	80 M ... 90 L	1LE1001-0D ... -0E	**Standard**	0	2			–
Frame sizes 100 L to 200 L: use of the 4 x 90° rotatable terminal box												
50 Hz 230 VΔ/400 VY	60 Hz [1]	460 VY		2, 4	100 L ... 200 L	1LE1001-1A ... -2A	**Standard**	2	2			–
50 Hz 400 VΔ/690 VY	60 Hz [1]	460 VΔ		2, 4	100 L ... 200 L	1LE1001-1A ... -2A	**Standard**	3	4			–
50 Hz 500 VY				2, 4	100 L ... 200 L	1LE1001-1A ... -2A	Without add. charge	2	7			–
50 Hz 500 VΔ				2, 4	100 L ... 200 L	1LE1001-1A ... -2A	Without add. charge	4	0			–
Further voltages [1]	For price information, code numbers, order codes and descriptions, see from Page 2/57							9	0			. . .

Types of construction			No. of poles	Frame size	Motor type	Version					Order code(s)
Without flange	IM B3 [2]		2, 4	100 L ... 200 L	1LE1001-1A ... -2A	**Standard**			A		–
With flange	IM B5 [2]		2, 4	100 L ... 200 L	1LE1001-1A ... -2A	With additional charge			F		–
With standard flange	IM B14 [2]		2, 4	80 M ... 160 L	1LE1001-1A ... -2A	With additional charge			K		–
Further types of construction	For price information, code letters and descriptions, see from Page 2/62								■		. . .

Motor protection		No. of poles	Frame size	Motor type	Version					Order code(s)
Without		2, 4	100 L ... 200 L	1LE1001-1A ... -2A	**Standard**				A	–
PTC thermistor with 3 temperature sensors		2, 4	100 L ... 200 L	1LE1001-1A ... -2A	With additional charge				B	–
Further motor protection	For price information, code letters and descriptions, see from Page 2/70								■	. . .

Terminal box position		No. of poles	Frame size	Motor type	Version					Order code(s)
Terminal box at top		2, 4	100 L ... 200 L	1LE1001-1A ... -2A	**Standard**					4 –
Further terminal box positions	For price information, code numbers and descriptions, see from Page 2/72									

Special versions		No. of poles	Frame size	Motor type						Order code(s)
Options	For price information, order codes and descriptions, see from Page 2/74				1LE1001-. . . . ■-■■■■-Z					. . .+. . .+. . .+. . .

[1] Operating values at rated output for 60 Hz are stored in the Drive Technology (DT) Configurator.

[2] Types derived from IM B3 (IM B6/7/8, IM V6 and IM V5), from IM B5 (IM V3 and IM V1) and from IM B14 (IM V19 and IM V18) are possible, provided that no requirements exist for condensation drainage holes (**H03**) and stamping of the type on the rating plate. The basic type IM B3, IM B5 or IM B14 is stamped as standard on the rating plate. When ordering with condensation drainage holes (**H03**), the type must be specified.

© Siemens AG 2015

Selection and ordering data (continued)

Operating values at rated output																	Aluminum series 1LE1001 – *IE2 version in accordance with IEC 60034-30 with increased output* Article No.			
P_{rated}, 50 Hz	**P_{rated}, 60 Hz** [1]	**Frame size**	n_{rated}, 50 Hz	T_{rated}, 50 Hz	IE class		η_{rated}, 50 Hz, 4/4	η_{rated}, 50 Hz, 3/4	η_{rated}, 50 Hz, 2/4	cos φ_{rated}, 50 Hz, 4/4	I_{rated}, 50 Hz, 400 V	T_{LR}/T_{rated}, 50 Hz	I_{LR}/I_{rated}, 50 Hz	T_B/T_{rated}, 50 Hz	L_{pfA}, 50 Hz	L_{WA}, 50 Hz		$m_{IM\ B3}$	J	Torque class
kW	kW	FS	rpm	Nm	50 Hz	60 Hz	%	%	%		A				dB(A)	dB(A)	▲ New	kg	kgm²	CL
• Cooling: self-ventilated (IC411) • Efficiency: IE2 High Efficiency, service factor (SF) 1.15 • Insulation: thermal class 155 (temperature class F), IP55 degree of protection, utilization in accordance with thermal class 130 (temperature class B)																				
6-pole: 1000 rpm at 50 Hz, 1200 rpm at 60 Hz [1]																				
2.2	**2.55**	**100 L**	965	22	IE2	IE1	81.8	83.2	82.6	0.76	5.1	1.7	4.9	2.5	59	71	**1LE1001-1AC6■-■■■■**	30	0.014	16
3	**3.45**	**112 M**	965	30	IE2	IE2	83.3	84	82.7	0.74	7	2.1	5.4	2.7	62	74	**1LE1001-1BC6■-■■■■**	34	0.017	16
7.5	**8.6**	**132 M**	970	74	IE2	IE2	87.2	88	87.2	0.75	16.6	2	5.6	2.6	63	75	**1LE1001-1CC6■-■■■■**	64	0.046	16
15	**17.3**	**160 L**	975	147	IE2	IE1	89.7	90.3	89.7	0.75	32	2	5.2	2.4	67	79	**1LE1001-1DC6■-■■■■**	115	0.12	16
18.5	**22**	**180 L**	975	181.2	IE2	IE2	90.4	91.1	90.8	0.77	38.5	2.3	6	2.9	67	80	▲ **1LE1001-1EC6■-■■■■**	130	0.206	16
30	**34.5**	**200 L**	975	293.8	IE2	IE2	91.7	92.5	92.5	0.77	61	2.6	6.3	2.7	63	76	▲ **1LE1001-2AC6■-■■■■**	192	0.381	16
8-pole: 750 rpm at 50 Hz, 900 rpm at 60 Hz [1]																				
15	**18**	**180 L**	720	199	–	–	87.9	88.9	88.2	0.73	33.5	2.2	4.9	2.5	67	75	▲ **1LE1001-1ED6■-■■■■**	151	0.263	13
18.5	**22**	**200 L**	720	245	–	–	88.6	89.9	90.1	0.78	38.5	2.6	5.8	3	65	72	▲ **1LE1001-2AD6■-■■■■**	198	0.416	13

Voltages				No. of poles	Frame size	Motor type	Version				Order code(s)
Frame sizes 100 L to 200 L: use of the 4 x 90° rotatable terminal box											
50 Hz	230 VΔ/400 VY	60 Hz [1]	460 VY	6, 8	100 L ... 200 L	1LE1001-1A ... -2A	**Standard**	2	2		–
50 Hz	400 VΔ/690 VY	60 Hz [1]	460 VΔ	6, 8	100 L ... 200 L	1LE1001-1A ... -2A	**Standard**	3	4		–
50 Hz	500 VY			6, 8	100 L ... 200 L	1LE1001-1A ... -2A	Without add. charge	2	7		–
50 Hz	500 VΔ			6, 8	100 L ... 200 L	1LE1001-1A ... -2A	Without add. charge	4	0		–
Further voltages [1]			For price information, code numbers, order codes and descriptions, see from Page 2/57					9	0		. . .
Types of construction				No. of poles	Frame size	Motor type	Version				Order code(s)
Without flange		IM B3 [2]		6, 8	100 L ... 200 L	1LE1001-1A ... -2A	**Standard**			A	–
With flange		IM B5 [2]		6, 8	100 L ... 200 L	1LE1001-1A ... -2A	With additional charge			F	–
With standard flange		IM B14 [2]		6, 8	100 L ... 160 L	1LE1001-1A ... -2A	With additional charge			K	–
Further types of construction			For price information, code letters and descriptions, see from Page 2/62							■	. . .
Motor protection				No. of poles	Frame size	Motor type	Version				Order code(s)
Without				6, 8	100 L ... 200 L	1LE1001-1A ... -2A	**Standard**			A	–
PTC thermistor with 3 temperature sensors				6, 8	100 L ... 200 L	1LE1001-1A ... -2A	With additional charge			B	–
Further motor protection			For price information, code letters and descriptions, see from Page 2/70							■	. . .
Terminal box position				No. of poles	Frame size	Motor type	Version				Order code(s)
Terminal box at top				6, 8	100 L ... 200 L	1LE1001-1A ... -2A	**Standard**			4	–
Further terminal box positions			For price information, code numbers and descriptions, see from Page 2/72								
Special versions				No. of poles	Frame size	Motor type					Order code(s)
Options			For price information, order codes and descriptions, see from Page 2/74				**1LE1001-. . . . ■-■■■■-Z**				. . .+. . .+. . .+. . .

[1] Operating values at rated output for 60 Hz are stored in the Drive Technology (DT) Configurator.

[2] Types derived from IM B3 (IM B6/7/8, IM V6 and IM V5), from IM B5 (IM V3 and IM V1) and from IM B14 (IM V19 and IM V18) are possible, provided that no requirements exist for condensation drainage holes (**H03**) and stamping of the type on the rating plate. The basic type IM B3, IM B5 or IM B14 is stamped as standard on the rating plate. When ordering with condensation drainage holes (**H03**), the type must be specified.

© Siemens AG 2015

Selection and ordering data

P_{rated}, 50 Hz	P_{rated}, 60 Hz	Frame size	Operating values at rated output: n_{rated}, 60 Hz	T_{rated}, 60 Hz	IE class	η_{rated}, 60 Hz, 4/4	η_{rated}, 60 Hz, 3/4	η_{rated}, 60 Hz, 2/4	cos φ_{rated}, 60 Hz, 4/4	I_{rated}, 60 Hz, 460 V	T_{LR}/T_{rated}, 60 Hz	I_{LR}/I_{rated}, 60 Hz	T_B/T_{rated}, 60 Hz	L_{pfA}, 60 Hz	L_{WA}, 60 Hz	**Aluminum series 1LE1041** – *IE2 version in accordance with IEC 60034-30* Article No.	$m_{IM\ B3}$	J	Torque class
kW	kW	FS	rpm	Nm		%	%	%		A				dB(A)	dB(A)	▲ New	kg	kgm²	CL
• Cooling: self-ventilated (IC 411) or with order code F90 forced-air cooled without external fan and fan cover (IC 416) • Insulation: thermal class 155 (temperature class F), IP55 degree of protection, utilization in accordance with thermal class 130 (temperature class B)																			
2-pole: 3000 rpm at 50 Hz, 3600 rpm at 60 Hz																			
0.75	**0.86**	**80 M**	3445	2.1	IE2	75.5	75.5	72.5	0.83	1.5	2.1	6	3	64	71	▲ **1LE1041-0DA2 ■-■■■■**	9	0.0008	16
1.5	**1.75**	**90 S**	3505	4.1	IE2	84	84	83	0.82	2.75	3.1	8.5	4.5	69	77	▲ **1LE1041-0EA0 ■-■■■■**	13	0.0017	16
2.2	**2.55**	**90 L**	3510	6	–	85.5	85.5	84.5	0.83	3.9	3	8.7	4.6	69	77	▲ **1LE1041-0EA4 ■-■■■■**	15	0.0021	16
4	**4.55**	**112 M**	3555	9.9	IE2	87.5	86.9	84.6	0.83	6.4	2.7	9.9	4.5	73	81	▲ **1LE1041-1BA2 ■-■■■■**	27	0.0092	16
5.5	**6.3**	**132 S**	3555	15	IE2	88.5	88.5	87.5	0.86	9.1	2	7.6	3.3	72	80	▲ **1LE1041-1CA0 ■-■■■■**	39	0.02	16
7.5	**8.6**	**132 S**	3560	20	IE2	89.5	89.5	88.5	0.87	12.1	2.3	8.2	3.6	72	80	▲ **1LE1041-1CA1 ■-■■■■**	43	0.024	16
11	**12.6**	**160 M**	3560	30	IE2	90.2	90.2	89.2	0.86	17.8	2.4	8.2	3.6	77	82	▲ **1LE1041-1DA2 ■-■■■■**	67	0.045	16
15	**17.3**	**160 M**	3565	40	IE2	90.2	90.2	89.2	0.87	24	2.8	8.4	3.9	77	82	▲ **1LE1041-1DA3 ■-■■■■**	75	0.053	16
18.5	**21.3**	**160 L**	3565	50	IE2	91	91	90	0.87	29.5	3.3	8.9	4.1	77	82	▲ **1LE1041-1DA4 ■-■■■■**	84	0.061	16
4-pole: 1500 rpm at 50 Hz, 1800 rpm at 60 Hz																			
0.75	**0.86**	**80 M**	1750	4.1	IE2	82.5	82.5	81.5	0.72	1.58	2.5	6.8	3.8	55	64	▲ **1LE1041-0DB3 ■-■■■■**	11	0.0021	11
1.5	**1.75**	**90 L**	1745	8.2	–	84	84	83	0.75	3	2.9	7.5	4	58	68	▲ **1LE1041-0EB4 ■-■■■■**	16	0.0036	16
2.2	**2.55**	**100 L**	1760	12	IE2	87.5	87.5	86.5	0.78	4.05	2.5	8.1	3.9	62	72	▲ **1LE1041-1AB4 ■-■■■■**	21	0.0086	21
4	**4.55**	**112 M**	1770	20	IE2	87.5	87.5	86.5	0.77	6.9	3	8.7	4	62	70	▲ **1LE1041-1BB2 ■-■■■■**	29	0.014	29
5.5	**6.3**	**132 S**	1770	30	IE2	89.5	89.5	88.5	0.78	9.9	2.6	8	3.3	68	76	▲ **1LE1041-1CB0 ■-■■■■**	42	0.027	42
7.5	**8.6**	**132 M**	1770	40	IE2	89.5	89.5	88.5	0.82	12.8	2.7	8	3.4	68	76	▲ **1LE1041-1CB2 ■-■■■■**	49	0.034	49
11	**12.6**	**160 M**	1775	59	IE2	91	91	90	0.84	18.1	2.5	7.7	3.2	69	77	▲ **1LE1041-1DB2 ■-■■■■**	71	0.065	71
15	**17.3**	**160 L**	1780	80	IE2	91	91	90	0.84	24.5	2.6	8.5	3.4	69	77	▲ **1LE1041-1DB4 ■-■■■■**	83	0.083	83
6-pole: 1000 rpm at 50 Hz, 1200 rpm at 60 Hz																			
0.75	**0.86**	**90 S**	1150	6.2	IE2	80	80.5	78	0.68	1.73	1.9	4.7	2.6	46	55	▲ **1LE1041-0EC0 ■-■■■■**	13	0.003	16
1.5	**1.75**	**100 L**	1175	12	IE2	86.5	86.3	84.2	0.69	3.15	2.2	6.4	3.2	62	71	▲ **1LE1041-1AC4 ■-■■■■**	25	0.011	16
2.2	**2.55**	**112 M**	1170	18	IE2	87.5	87.3	85.5	0.73	4.3	2.1	6.3	3.2	65	74	▲ **1LE1041-1BC2 ■-■■■■**	29	0.014	16
4	**4.55**	**132 M**	1180	30	IE2	87.5	87.5	85.8	0.71	7.5	1.9	6.2	3	67	75	▲ **1LE1041-1CC2 ■-■■■■**	43	0.029	13
5.5	**6.3**	**132 M**	1175	45	IE2	89.5	89.8	88.8	0.73	10.6	2.1	6.5	2.9	67	75	▲ **1LE1041-1CC3 ■-■■■■**	52	0.037	16
7.5	**8.6**	**160 M**	1180	61	IE2	89.5	89.6	88.4	0.73	14.4	2.1	5.4	2.5	70	79	▲ **1LE1041-1DC2 ■-■■■■**	77	0.075	16
11	**12.6**	**160 L**	1180	89	IE2	90.2	90.5	89.5	0.74	20.5	2.2	5.5	2.5	70	79	▲ **1LE1041-1DC4 ■-■■■■**	93	0.098	16

Voltages (≤ 600 V) [1]				No. of poles	Frame size	Motor type	Version					Order code(s)
50 Hz	230 VΔ/400 VY	60 Hz	460 VY	2, 4, 6	80 M ... 160 L	1LE1041-0D ... -1D	**Standard**	**2**	**2**			–
50 Hz	400 VΔ	60 Hz	460 VΔ	2, 4, 6	80 M ... 160 L	1LE1041-0D ... -1D	**Standard**	**3**	**4**			–
50 Hz	500 VY			2, 4, 6	80 M ... 160 L	1LE1041-0D ... -1D	Without add. charge	**2**	**7**			–
50 Hz	500 VΔ			2, 4, 6	80 M ... 160 L	1LE1041-0D ... -1D	Without add. charge	**4**	**0**			–
Further voltages		For price information, code numbers, order codes and descriptions, see from Page 2/57						**9**	**0**			. . .
Types of construction [2]				No. of poles	Frame size	Motor type	Version					Order code(s)
With flange		IM B5 [3]		2, 4, 6	80 M ... 160 L	1LE1041-0D ... -1D	With additional charge			**F**		–
With standard flange		IM B14 [3]		2, 4, 6	80 M ... 160 L	1LE1041-0D ... -1D	With additional charge			**K**		–
Further types of construction		For price information, code letters and descriptions, see from Page 2/62								■		. . .
Motor protection				No. of poles	Frame size	Motor type	Version					Order code(s)
Without				2, 4, 6	80 M ... 160 L	1LE1041-0D ... -1D	**Standard**				**A**	–
PTC thermistor with 3 temperature sensors				2, 4, 6	80 M ... 160 L	1LE1041-0D ... -1D	With additional charge				**B**	–
Further motor protection		For price information, code letters and descriptions, see from Page 2/70									■	. . .
Terminal box position				No. of poles	Frame size	Motor type	Version					Order code(s)
Terminal box at top				2, 4, 6	80 M ... 160 L	1LE1041-0D ... -1D	**Standard**					**4** –
Further terminal box positions		For price information, code numbers and descriptions, see from Page 2/72										
Special versions				No. of poles	Frame size	Motor type						Order code(s)
Forced-air cooled motors without ext. fan/fan cover (IC 416)				2, 4, 6	100 L ... 160 L	1LE1041-0D ... -1D	**1LE1041-. . . . ■-■■■■**					**-Z F90+. . .+. . .+. . .**
Options		For price information, order codes and descriptions, see from Page 2/74					**1LE1041-. . . . ■-■■■■**					**-Z . . .+. . .+. . .+. . .**

[1] Operating voltages only ≤ 600 V admissible in accordance with MG1 Table 12-11.

[2] Types of construction with feet are not possible for 2-pole, 4-pole and 6-pole motors ≤ 200 hp in accordance with MG1 Table 12-11.

[3] Types derived from IM B5 (IM V3 and IM V1) and from IM B14 (IM V19 and IM V18) are possible, provided that no requirements exist for condensation drainage holes (**H03**) and stamping of the type on the rating plate. The basic type IM B5 or IM B14 is stamped as standard on the rating plate. When ordering with condensation drainage holes (**H03**), the type must be specified.

© Siemens AG 2015

2

Selection and ordering data

P_{rated}, 50 Hz	P_{rated}, 60 Hz	Frame size	Operating values at rated output: n_{rated}, 60 Hz	T_{rated}, 60 Hz	IE class	η_{rated}, 60 Hz, 4/4	η_{rated}, 60 Hz, 3/4	η_{rated}, 60 Hz, 2/4	cos φ_{rated}, 60 Hz, 4/4	I_{rated}, 60 Hz, 460 V	T_{LR}/T_{rated}, 60 Hz	I_{LR}/I_{rated}, 60 Hz	T_B/T_{rated}, 60 Hz	L_{pfA}, 60 Hz	L_{WA}, 60 Hz	Aluminum series 1LE1041 – *IE2 version in accordance with IEC 60034-30 with increased output* Article No.	$m_{IM\ B3}$	J	Torque class
kW	kW	FS	rpm	Nm		%	%	%		A				dB(A)	dB(A)	▲ New	kg	kgm²	CL
• Cooling: self-ventilated (IC 411) or with order code F90 forced-air cooled without external fan and fan cover (IC 416) • Insulation: thermal class 155 (temperature class F), IP55 degree of protection, utilization in accordance with thermal class 130 (temperature class B)																			
2-pole: 3000 rpm at 50 Hz, 3600 rpm at 60 Hz																			
4	**4.55**	**100 L**	3530	10	IE2	87.5	87.5	86.5	0.84	6.3	3.3	9.6	4.6	71	79	▲ **1LE1041-1AA6** ■-■■■■	26	0.0054	16
5.5	**6.3**	**112 M**	3550	15	IE2	88.5	88.6	87.5	0.87	9	2.8	9.9	4.5	73	81	▲ **1LE1041-1BA6** ■-■■■■	34	0.012	16
11	**12.6**	**132 M**	3555	30	IE2	90.2	90.2	89.2	0.9	17	2.6	9.3	3.6	72	80	▲ **1LE1041-1CA6** ■-■■■■	57	0.031	16
22	**25.3**	**160 L**	3565	59	IE2	91	91	90	0.89	34	3.6	9.6	4.3	77	82	▲ **1LE1041-1DA6** ■-■■■■	94	0.068	16
4-pole: 1500 rpm at 50 Hz, 1800 rpm at 60 Hz																			
4	**4.55**	**100 L**	1770	20	IE2	87.5	87.5	86.5	0.76	7	2.8	9.1	4.3	62	72	▲ **1LE1041-1AB6** ■-■■■■	30	0.014	30
5.5	**6.3**	**112 M**	1765	30	IE2	89.5	89.5	88.5	0.8	9.6	2.8	8.3	3.6	62	70	▲ **1LE1041-1BB6** ■-■■■■	34	0.017	34
11	**12.6**	**132 M**	1770	59	IE2	91	91	90	0.82	18.5	2.9	8.5	3.6	68	76	▲ **1LE1041-1CB6** ■-■■■■	64	0.046	64
18.5	**21.3**	**160 L**	1780	99	IE2	92.4	92.4	91.4	0.84	30	2.9	8.8	3.6	69	77	▲ **1LE1041-1DB6** ■-■■■■	100	0.099	100
6-pole: 1000 rpm at 50 Hz, 1200 rpm at 60 Hz																			
7.5	**8.6**	**132 M**	1175	61	IE2	89.5	89.8	88.8	0.72	14.6	2.2	6.4	3	67	75	▲ **1LE1041-1CC6** ■-■■■■	64	0.046	16
15	**17.3**	**160 L**	1180	121	IE2	90.2	90.4	89.3	0.73	28.5	2.3	5.8	2.6	70	79	▲ **1LE1041-1DC6** ■-■■■■	115	0.12	16

Voltages (≤ 600 V) [1]				No. of poles	Frame size	Motor type	Version					Order code(s)
50 Hz	230 VΔ/400 VY	60 Hz	460 VY	2, 4, 6	100 L ... 160 L	1LE1041-1A ... -1D	**Standard**	**2**	**2**			–
50 Hz	400 VΔ	60 Hz	460 VΔ	2, 4, 6	100 L ... 160 L	1LE1041-1A ... -1D	**Standard**	**3**	**4**			–
50 Hz	500 VY			2, 4, 6	100 L ... 160 L	1LE1041-1A ... -1D	Without add. charge	**2**	**7**			–
50 Hz	500 VΔ			2, 4, 6	100 L ... 160 L	1LE1041-1A ... -1D	Without add. charge	**4**	**0**			–
Further voltages			For price information, code numbers, order codes and descriptions, see from Page 2/57					**9**	**0**			. . .
Types of construction [2]				No. of poles	Frame size	Motor type	Version					Order code(s)
With flange		IM B5 [3]		2, 4, 6	100 L ... 160 L	1LE1041-1A ... -1D	With additional charge			**F**		–
With standard flange		IM B14 [3]		2, 4, 6	100 L ... 160 L	1LE1041-1A ... -1D	With additional charge			**K**		–
Further types of construction			For price information, code letters and descriptions, see from Page 2/62							■		. . .
Motor protection				No. of poles	Frame size	Motor type	Version					Order code(s)
Without				2, 4, 6	100 L ... 160 L	1LE1041-1A ... -1D	**Standard**				**A**	–
PTC thermistor with 3 temperature sensors				2, 4, 6	100 L ... 160 L	1LE1041-1A ... -1D	With additional charge				**B**	–
Further motor protection			For price information, code letters and descriptions, see from Page 2/70								■	. . .
Terminal box position				No. of poles	Frame size	Motor type	Version					Order code(s)
Terminal box at top				2, 4, 6	100 L ... 160 L	1LE1041-1A ... -1D	**Standard**					**4** –
Further terminal box positions			For price information, code numbers and descriptions, see from Page 2/72									
Special versions				No. of poles	Frame size	Motor type						Order code(s)
Forced-air cooled motors without ext. fan/fan cover (IC 416)				2, 4, 6	100 L ... 160 L	1LE1041-1A ... -1D	**1LE1041-. . . . ■-■■■■-Z**					**F90+. . .+. . .+. . .**
Options			For price information, order codes and descriptions, see from Page 2/74				**1LE1041-. . . . ■-■■■■-Z**					**. . .+. . .+. . .+. . .**

1) Operating voltages only ≤ 600 V admissible in accordance with MG1 Table 12-11.

2) Types of construction with feet are not possible for 2-pole, 4-pole and 6-pole motors ≤ 200 hp in accordance with MG1 Table 12-11.

3) Types derived from IM B5 (IM V3 and IM V1) and from IM B14 (IM V19 and IM V18) are possible, provided that no requirements exist for condensation drainage holes (**H03**) and stamping of the type on the rating plate. The basic type IM B5 or IM B14 is stamped as standard on the rating plate. When ordering with condensation drainage holes (**H03**), the type must be specified.

© Siemens AG 2015

Selection and ordering data

P_{rated}, 50 Hz	P_{rated}, 60 Hz [1]	Frame size	Operating values at rated output: n_{rated}, 50 Hz	T_{rated}, 50 Hz	IE class		η_{rated}, 50 Hz, 4/4	η_{rated}, 50 Hz, 3/4	η_{rated}, 50 Hz, 2/4	cos φ_{rated}, 50 Hz, 4/4	I_{rated}, 50 Hz, 400 V	I_{LR}/I_{rated}, 50 Hz	I_{LR}/I_{rated}, 50 Hz	T_B/T_{rated}, 50 Hz	L_{pfA}, 50 Hz	L_{WA}, 50 Hz	Cast-iron series 1LE1501 – *Basic Line* 1LE1601 – *Performance Line* *IE2 version in accordance with IEC 60034-30* Article No.	$m_{IM\ B3}$	J	Torque class
kW	kW	FS	rpm	Nm	50 Hz	60 Hz	%	%	%		A				dB(A)	dB(A)		kg	kgm^2	CL
• Cooling: self-ventilated (IC411) or with order code F90 forced-air cooled without external fan and fan cover (IC416)																				
• Efficiency: IE2 High Efficiency, service factor (SF) 1.15																				
• Insulation: thermal class 155 (temperature class F), IP55 degree of protection, utilization in accordance with thermal class 130 (temperature class B)																				
2-pole: 3000 rpm at 50 Hz, 3600 rpm at 60 Hz [1]																				
0.37	**0.43**	**71 M**	2770	1.3	IE2	IE2	69.5	70.5	68.5	0.81	0.95	2.5	4.1	2.5	52	63	**1LE1 5 01-0CA2 ■-■■■■**	11.5	0.00035	16
0.55	**0.63**	**71 M**	2780	1.9	IE2	IE2	74.1	75	73.1	0.8	1.34	2.6	4.6	2.6	52	63	**1LE1 5 01-0CA3 ■-■■■■**	13	0.00045	16
0.75	**0.86**	**80 M**	2805	2.6	IE2	IE2	77.4	77.9	74.4	0.84	1.67	1.9	4.9	2.3	60	71	**1LE1 5 01-0DA2 ■-■■■■**	16	0.0008	16
1.1	**1.27**	**80 M**	2835	3.7	IE2	IE2	79.6	79.6	78.6	0.83	2.4	2.7	6	3.1	60	71	**1LE1 5 01-0DA3 ■-■■■■**	18	0.0011	16
1.5	**1.75**	**90 S**	2885	5	IE2	IE2	81.3	81.3	80.3	0.84	3.15	2.7	6.9	3.6	65	77	**1LE1 5 01-0EA0 ■-■■■■**	23	0.0017	16
2.2	**2.55**	**90 L**	2890	7.3	IE2	IE2	83.2	83.2	82.2	0.85	4.5	2.5	7.1	3.7	65	77	**1LE1 5 01-0EA4 ■-■■■■**	25.5	0.0021	16
3	**3.45**	**100 L**	2905	9.9	IE2	IE2	84.6	84.6	83.6	0.84	6.1	2.3	7	3.3	67	79	**1LE1 ■ 01-1AA4 ■-■■■■**	32	0.0044	16
4	**4.55**	**112 M**	2945	13	IE2	IE2	85.8	86.2	85.1	0.85	7.9	2.1	8	3.6	69	81	**1LE1 ■ 01-1BA2 ■-■■■■**	39	0.0092	16
5.5	**6.3**	**132 S**	2950	18	IE2	IE2	87	87	86	0.87	10.5	1.8	6.6	2.9	68	80	**1LE1 ■ 01-1CA0 ■-■■■■**	57	0.02	16
7.5	**8.6**	**132 S**	2950	24	IE2	IE2	88.1	88.1	87.1	0.87	14.1	2.2	7.5	3.1	68	80	**1LE1 ■ 01-1CA1 ■-■■■■**	61	0.024	16
11	**12.6**	**160 M**	2955	36	IE2	IE2	89.4	89.4	88.4	0.87	20.5	2.1	7.4	3.2	70	82	**1LE1 ■ 01-1DA2 ■-■■■■**	96	0.045	16
15	**17.3**	**160 M**	2955	48	IE2	IE2	90.3	90.3	89.3	0.88	27	2.4	7.6	3.4	70	82	**1LE1 ■ 01-1DA3 ■-■■■■**	104	0.053	16
18.5	**21.3**	**160 L**	2955	60	IE2	IE2	90.9	90.9	89.9	0.88	33.5	2.9	7.9	3.6	70	82	**1LE1 ■ 01-1DA4 ■-■■■■**	113	0.061	16
22	**24.5**	**180 M**	2940	71	IE2	IE2	91.3	91.8	91.4	0.87	40	2.7	7.4	3.6	77	84	**1LE1 ■ 01-1EA2 ■-■■■■**	145	0.069	16
30	**33.5**	**200 L**	2960	97	IE2	IE2	92	92.3	91.7	0.87	54	2.5	6.9	3.3	78	85	**1LE1 ■ 01-2AA4 ■-■■■■**	200	0.13	16
37	**41.5**	**200 L**	2960	119	IE2	IE2	92.5	92.8	92.3	0.88	66	2.7	7.4	3.5	78	85	**1LE1 ■ 01-2AA5 ■-■■■■**	225	0.15	16
45	**51**	**225 M**	2965	145	IE2	IE2	92.9	93.1	92.5	0.88	79	2.7	7.8	3.7	76	89	**1LE1 ■ 01-2BA2 ■-■■■■**	295	0.23	16
55	**62**	**250 M**	2970	177	IE2	IE2	93.2	93.3	92.4	0.88	97	2.3	6.8	3.1	76	89	**1LE1 ■ 01-2CA2 ■-■■■■**	360	0.4	13
75	**84**	**280 S**	2978	240	IE2	IE2	93.8	93.6	92.4	0.86	134	2.5	7.2	3.2	76	89	**1LE1 ■ 01-2DA0 ■-■■■■**	490	0.71	13
90	**101**	**280 M**	2975	289	IE2	IE2	94.1	94.2	93.5	0.88	157	2.5	7.1	3.1	76	89	**1LE1 ■ 01-2DA2 ■-■■■■**	530	0.83	13
110	**123**	**315 S**	2982	352	IE2	IE2	94.3	94.2	93.3	0.9	187	2.4	7.3	3	77	91	**1LE1 ■ 01-3AA0 ■-■■■■**	720	1.3	13
132	**148**	**315 M**	2982	423	IE2	IE2	94.6	94.7	94.1	0.91	220	2.4	7.2	3.1	77	91	**1LE1 ■ 01-3AA2 ■-■■■■**	880	1.6	13
160	**180**	**315 L**	2982	512	IE2	IE2	94.8	94.9	94.3	0.92	265	2.3	7	3.1	80	95	**1LE1 ■ 01-3AA4 ■-■■■■**	930	1.8	13
200	**224**	**315 L**	2982	640	IE2	IE2	95	95.2	94.8	0.92	330	2.5	7.3	3	80	95	**1LE1 ■ 01-3AA5 ■-■■■■**	1130	2.2	13

	Relubrication	Motor protection	Fan cover	Bearing size	Liability for defects	
Basic Line	Optional (standard from FS 280 upwards)	Optional	Plastic	62 (63 from FS 280 upwards)	12 months	5
Performance Line	Standard from FS 160 (optional for FS 100 to 132)	Standard PTC	Steel	63	36 months	6

Voltages [2]			No. of poles	Frame size	Motor type	Version			Order code(s)
50 Hz	230 VΔ/400 VY	60 Hz [1]	460 VY	2	71 M ... 315 L	1LE1■01-0C … -3A	**Standard**	2	2	–
50 Hz	400 VΔ/690 VY	60 Hz [1]	460 VΔ	2	71 M ... 315 L	1LE1■01-0C … -3A	**Standard**	3	4	–
50 Hz	500 VY			2	71 M ... 315 L	1LE1■01-0C … -3A	Without add. chrg.	2	7	–
50 Hz	500 VΔ			2	100 L ... 315 L	1LE1■01-1A … -3A	Without add. chrg.	4	0	–
Further voltages [1]		For price information, code numbers, order codes and descriptions, see from Page 2/60						9	0	. . .

Types of construction		No. of poles	Frame size	Motor type	Version		Order code(s)
Without flange	IM B3 [3]	2	71 M ... 315 L	1LE1■01-0C … -3A	**Standard**	A	–
With flange	IM B5 [3]	2	71 M ... 315 M	1LE1■01-0C … -3A	With additional charge	F	–
With standard flange	IM B14 [3]	2	71 M ... 160 L	1LE1■01-0C … -1D	With additional charge	K	–
Further types of construction	For price information, code letters and descriptions, see from Page 2/66					■	. . .

Motor protection	Line	No. of poles	Frame size	Motor type	Version		Order code(s)
Without	Only possible for **Basic Line**	2	71 M ... 315 L	1LE1501-0C … -3A	**Standard**	A	–
PTC thermistor with 3 temperature sensors	**Basic Line**	2	71 M ... 315 L	1LE1501-0C … -3A	With additional charge	B	–
	Performance Line	2	100 L ... 315 L	1LE1601-1A … -3A	**Standard**	B	–
Further motor protection	For price information, code letters and descriptions, see from Page 2/71					■	. . .

Terminal box position	No. of poles	Frame size	Motor type	Version		Order code(s)
Terminal box at top	2	71 M ... 315 L	1LE1■01-0C … -3A	**Standard**	4	–
Further terminal box positions	For price information, code numbers and descriptions, see from Page 2/73					

Special versions	No. of poles	Frame size	Motor type		Order code(s)
Forced-air cooled motors without ext. fan/fan cover (IC 416)	2	71 M ... 315 L	1LE1■01-0C … -3A	**1LE1■01-. . . . ■-■■■■-Z**	**F90+. . .+. . .+. . .**
Options	For price information, order codes and descriptions, see from Page 2/80			**1LE1■01-. . . . ■-■■■■-Z**	**. . .+. . .+. . .+. . .**

1) Operating values at rated output for 60 Hz are stored in the Drive Technology (DT) Configurator.

2) Parallel supply lines are required in the case of connection to ≤ 240 V. For frame size 315 with connection to ≤ 240 V, due to the high current, a drilled, removable entry plate (Order code **R52**) or a larger terminal box (Order code **R50**) can be used. Order codes **R52** and **R50** alter the motor dimensions.

3) Types derived from IM B3 (IM B6/7/8, IM V6 and IM V5), from IM B5 (IM V3 and IM V1) and from IM B14 (IM V19 and IM V18) are possible, provided that no requirement exists for stamping of the type on the rating plate. The basic type IM B3, IM B5 or IM B14 is stamped as standard on the rating plate. If mounted in a different position, the position must be specified to ensure that the condensation drainage holes are positioned correctly.

© Siemens AG 2015

Selection and ordering data (continued)

P_{rated}, 50 Hz	P_{rated}, 60 Hz [1]	Frame size	Operating values at rated output: n_{rated}, 50 Hz	T_{rated}, 50 Hz	IE class		η_{rated}, 50 Hz, 4/4	η_{rated}, 50 Hz, 3/4	η_{rated}, 50 Hz, 2/4	cos φ_{rated}, 50 Hz, 4/4	I_{rated}, 50 Hz, 400 V	T_{LR}/T_{rated}, 50 Hz	I_{LR}/I_{rated}, 50 Hz	T_B/T_{rated}, 50 Hz	L_{pfA}, 50 Hz	L_{WA}, 50 Hz	Cast-iron series **1LE1501** – *Basic Line* **1LE1601** – *Performance Line* *IE2 version in accordance with IEC 60034-30* Article No.	$m_{IM\ B3}$	J	Torque class
kW	kW	FS	rpm	Nm	50 Hz	60 Hz	%	%	%		A				dB(A)	dB(A)		kg	kgm^2	CL
• Cooling: self-ventilated (IC411) or with order code F90 forced-air cooled without external fan and fan cover (IC416) • Efficiency: IE2 High Efficiency, service factor (SF) 1.15 • Insulation: thermal class 155 (temperature class F), IP55 degree of protection, utilization in accordance with thermal class 130 (temperature class B)																				
4-pole: 1500 rpm at 50 Hz, 1800 rpm at 60 Hz [1]																				
0.25	**0.29**	**71 M**	1395	1.7	IE2	IE2	68.5	68.2	63.8	0.69	0.76	2.4	3.7	2.5	44	55	**1LE1 5 01-0CB2 ■-■■■■**	12	0.00076	16
0.37	**0.43**	**71 M**	1380	2.6	IE2	IE2	72.7	73.2	70.2	0.72	1.02	2.3	3.8	2.4	44	55	**1LE1 5 01-0CB3 ■-■■■■**	13	0.00095	16
0.55	**0.63**	**80 M**	1440	3.6	–	–	78.1	78.6	75.6	0.74	1.37	2.2	5.3	3.1	53	64	**1LE1 5 01-0DB2 ■-■■■■**	17	0.0017	16
0.75	**0.86**	**80 M**	1440	5	IE2	IE2	79.6	79.6	78.6	0.76	1.79	2.2	5.6	3.1	53	64	**1LE1 5 01-0DB3 ■-■■■■**	18.5	0.0021	16
1.1	**1.27**	**90 S**	1425	7.4	IE2	IE2	81.4	81.4	80.4	0.78	2.5	2.3	5.6	2.9	56	68	**1LE1 5 01-0EB0 ■-■■■■**	23	0.0028	16
1.5	**1.75**	**90 L**	1435	10	IE2	IE2	82.8	82.8	81.8	0.79	3.3	2.6	6.4	3.4	56	68	**1LE1 5 01-0EB4 ■-■■■■**	25	0.0036	16
2.2	**2.55**	**100 L**	1455	14	IE2	IE2	84.3	84.3	83.3	0.81	4.65	2.1	6.9	3.3	60	72	**1LE1 ■ 01-1AB4 ■-■■■■**	32	0.0086	16
3	**3.45**	**100 L**	1455	20	IE2	IE2	85.5	85.5	84.5	0.82	6.2	2	6.9	3.1	60	72	**1LE1 ■ 01-1AB5 ■-■■■■**	37	0.011	16
4	**4.55**	**112 M**	1460	26	IE2	IE2	86.6	86.6	85.6	0.81	8.2	2.5	7.1	3.2	58	70	**1LE1 ■ 01-1BB2 ■-■■■■**	46	0.014	16
5.5	**6.3**	**132 S**	1465	36	IE2	IE2	87.7	87.7	86.7	0.8	11.3	2.3	6.9	2.9	64	76	**1LE1 ■ 01-1CB0 ■-■■■■**	61	0.027	16
7.5	**8.6**	**132 M**	1465	49	IE2	IE2	88.7	88.7	87.7	0.83	14.7	2.3	6.9	2.9	64	76	**1LE1 ■ 01-1CB2 ■-■■■■**	75	0.034	16
11	**12.6**	**160 M**	1470	71	IE2	IE2	89.8	89.8	88.8	0.85	21	2.1	6.7	2.8	65	77	**1LE1 ■ 01-1DB2 ■-■■■■**	96	0.065	16
15	**17.3**	**160 L**	1475	97	IE2	IE2	90.6	90.6	89.6	0.85	28	2.3	7.3	3	65	77	**1LE1 ■ 01-1DB4 ■-■■■■**	104	0.083	16
18.5	**21.3**	**180 M**	1465	121	IE2	IE2	91.2	92	91.9	0.84	35	2.5	7.2	3.4	61	74	**1LE1 ■ 01-1EB2 ■-■■■■**	160	0.12	16
22	**25.3**	**180 L**	1465	143	IE2	IE2	91.6	92.2	91.9	0.84	41.5	2.6	7.3	3.5	69	76	**1LE1 ■ 01-1EB4 ■-■■■■**	170	0.13	16
30	**34.5**	**200 L**	1470	195	IE2	IE2	92.3	92.8	92.6	0.84	56	2.5	6.7	3.3	70	77	**1LE1 ■ 01-2AB5 ■-■■■■**	230	0.2	16
37	**42.5**	**225 S**	1470	240	IE2	IE2	92.7	93.5	93.5	0.88	65	2.3	6.6	2.9	66	79	**1LE1 ■ 01-2BB0 ■-■■■■**	280	0.42	16
45	**52**	**225 M**	1475	291	IE2	IE2	93.1	93.8	93.7	0.87	80	2.5	6.9	3.1	66	79	**1LE1 ■ 01-2BB2 ■-■■■■**	305	0.46	16
55	**63**	**250 M**	1480	355	IE2	IE2	93.5	93.9	93.5	0.85	100	2.7	6.8	3	66	79	**1LE1 ■ 01-2CB2 ■-■■■■**	385	0.75	16
75	**86**	**280 S**	1485	482	IE2	IE2	94	94.2	93.8	0.87	132	2.5	6.8	3	71	85	**1LE1 ■ 01-2DB0 ■-■■■■**	550	1.3	16
90	**104**	**280 M**	1486	578	IE2	IE2	94.2	94.3	93.6	0.87	159	2.6	7.3	3.1	71	85	**1LE1 ■ 01-2DB2 ■-■■■■**	570	1.4	16
110	**127**	**315 S**	1490	705	IE2	IE2	94.5	94.6	94	0.86	195	2.7	7.4	3	72	86	**1LE1 ■ 01-3AB0 ■-■■■■**	740	2	16
132	**152**	**315 M**	1490	846	IE2	IE2	94.7	94.9	94.6	0.87	230	2.7	7.1	2.9	75	89	**1LE1 ■ 01-3AB2 ■-■■■■**	870	2.3	16
160	**184**	**315 L**	1490	1025	IE2	IE2	94.9	95	94.5	0.87	280	2.8	7.2	3.1	76	91	**1LE1 ■ 01-3AB4 ■-■■■■**	940	2.8	16
200	**230**	**315 L**	1490	1282	IE2	IE2	95.1	95.3	94.7	0.87	350	3.1	7.5	3.2	77	92	**1LE1 ■ 01-3AB5 ■-■■■■**	1140	3.5	16

	Relubrication	Motor protection	Fan cover	Bearing size	Liability for defects	
Basic Line	Optional (standard from FS 280 upwards)	Optional	Plastic	62 (63 from FS 280 upwards)	12 months	5
Performance Line	Standard from FS 160 (optional for FS 100 to 132)	Standard PTC	Steel	63	36 months	6

Voltages [2]			No. of poles	Frame size	Motor type	Version				Order code(s)
50 Hz	230 VΔ/400 VY	60 Hz [1]	4	71 M ... 315 L	1LE1■01-0C … -3A	**Standard**	2	2		–
50 Hz	400 VΔ/690 VY	60 Hz [1]	4	71 M ... 315 L	1LE1■01-0C … -3A	**Standard**	3	4		–
50 Hz	500 VY		4	71 M ... 315 L	1LE1■01-0C … -3A	Without add. chrg.	2	7		–
50 Hz	500 VΔ		4	100 L ... 315 L	1LE1■01-1A … -3A	Without add. chrg.	4	0		–
Further voltages [1]		For price information, code numbers, order codes and descriptions, see from Page 2/60					9	0		. . .

Types of construction		No. of poles	Frame size	Motor type	Version			Order code(s)
Without flange	IM B3 [3]	4	71 M ... 315 L	1LE1■01-0C … -3A	**Standard**	A		–
With flange	IM B5 [3]	4	71 M ... 315 M	1LE1■01-0C … -3A	With additional charge	F		–
With standard flange	IM B14 [3]	4	71 M ... 160 L	1LE1■01-0C … -1D	With additional charge	K		–
Further types of construction	For price information, code letters and descriptions, see from Page 2/66					■		. . .

Motor protection	Line	No. of poles	Frame size	Motor type	Version			Order code(s)
Without	Only possible for **Basic Line**	4	71 M ... 315 L	1LE1501-0C … -3A	**Standard**	A		–
PTC thermistor with 3 temperature sensors	**Basic Line**	4	71 M ... 315 L	1LE1501-0C … -3A	With additional charge	B		–
	Performance Line	4	100 L ... 315 L	1LE1601-1A … -3A	**Standard**	B		–
Further motor protection	For price information, code letters and descriptions, see from Page 2/71					■		. . .

Terminal box position	No. of poles	Frame size	Motor type	Version		Order code(s)
Terminal box at top	4	71 M ... 315 L	1LE1■01-0C … -3A	**Standard**	4	–
Further terminal box positions	For price information, code numbers and descriptions, see from Page 2/73					

Special versions	No. of poles	Frame size	Motor type		Order code(s)
Forced-air cooled motors without ext. fan/fan cover (IC 416)	4	71 M ... 315 L	1LE1■01-0C … -3A	**1LE1■01-. . . . ■-■■■■-Z**	**F90+. . .+. . .+. . .**
Options	For price information, order codes and descriptions, see from Page 2/80			**1LE1■01-. . . . ■-■■■■-Z**	**. . .+. . .+. . .+. . .**

[1] Operating values at rated output for 60 Hz are stored in the Drive Technology (DT) Configurator.

[2] Parallel supply lines are required in the case of connection to ≤ 240 V. For frame size 315 with connection to ≤ 240 V, due to the high current, a drilled, removable entry plate (Order code **R52**) or a larger terminal box (Order code **R50**) can be used. Order codes **R52** and **R50** alter the motor dimensions.

[3] Types derived from IM B3 (IM B6/7/8, IM V6 and IM V5), from IM B5 (IM V3 and IM V1) and from IM B14 (IM V19 and IM V18) are possible, provided that no requirement exists for stamping of the type on the rating plate. The basic type IM B3, IM B5 or IM B14 is stamped as standard on the rating plate. If mounted in a different position, the position must be specified to ensure that the condensation drainage holes are positioned correctly.

© Siemens AG 2015

Selection and ordering data (continued)

P_{rated}, 50 Hz	P_{rated}, 60 Hz [1]	Frame size	Operating values at rated output: n_{rated}, 50 Hz	T_{rated}, 50 Hz	IE class 50 Hz	IE class 60 Hz	η_{rated}, 50 Hz, 4/4	η_{rated}, 50 Hz, 3/4	η_{rated}, 50 Hz, 2/4	cos φ_{rated}, 50 Hz, 4/4	I_{rated}, 50 Hz, 400 V	T_{LR}/T_{rated}, 50 Hz	I_{LR}/I_{rated}, 50 Hz	T_B/T_{rated}, 50 Hz	L_{pfA}, 50 Hz	L_{WA}, 50 Hz	Cast-iron series: 1LE1501 – *Basic Line*; 1LE1601 – *Performance Line*; *IE2 version in accordance with IEC 60034-30*; Article No.	$m_{IM\ B3}$	J	Torque class
kW	kW	FS	rpm	Nm			%	%	%		A				dB(A)	dB(A)		kg	kgm^2	CL
• Cooling: self-ventilated (IC411) or with order code F90 forced-air cooled without external fan and fan cover (IC416) • Efficiency: IE2 High Efficiency, service factor (SF) 1.15 • Insulation: thermal class 155 (temperature class F), IP55 degree of protection, utilization in accordance with thermal class 130 (temperature class B)																				
6-pole: 1000 rpm at 50 Hz, 1200 rpm at 60 Hz [1]																				
0.18	0.21	71 M	875	2	IE2	IE2	56.6	57	53.5	0.68	0.68	2.2	2.5	2.3	39	50	1LE1 5 01-0CC2 ■-■■■■	11.5	0.0008	16
0.25	0.29	71 M	870	2.7	IE2	IE2	61.6	62.7	60	0.7	0.84	2.3	2.6	2.3	39	50	1LE1 5 01-0CC3 ■-■■■■	12.5	0.001	16
0.37	0.43	80 M	925	3.85	–	–	71.4	71.5	66.5	0.69	1.09	2.1	4	2.4	42	53	1LE1 5 01-0DC2 ■-■■■■	16.5	0.0017	16
0.55	0.63	80 M	935	5.6	–	–	74	74	70.5	0.66	1.63	2.5	4.4	2.9	42	53	1LE1 5 01-0DC3 ■-■■■■	18.5	0.0025	16
0.75	0.86	90 S	925	7.7	IE2	IE2	75.9	76	73	0.7	2.05	2	4.1	2.5	43	55	1LE1 5 01-0EC0 ■-■■■■	23	0.003	16
1.1	1.27	90 L	935	11	IE2	IE1	78.1	78.5	75	0.7	2.9	2.2	4.4	2.6	43	55	1LE1 5 01-0EC4 ■-■■■■	26.5	0.004	16
1.5	1.75	100 L	970	15	IE2	IE2	79.8	80.5	79	0.73	3.7	2	5.4	2.8	59	71	1LE1 ■ 01-1AC4 ■-■■■■	36	0.011	16
2.2	2.55	112 M	965	22	IE2	IE2	81.8	82.6	81.4	0.75	5.2	2	5	2.8	62	74	1LE1 ■ 01-1BC2 ■-■■■■	41	0.014	16
3	3.45	132 S	970	30	IE2	IE2	83.3	83.4	80.9	0.72	7.2	1.6	5	2.5	63	75	1LE1 ■ 01-1CC0 ■-■■■■	56	0.024	13
4	4.55	132 M	970	39	IE2	IE2	84.6	85.5	84.5	0.75	9.1	1.6	5	2.3	63	75	1LE1 ■ 01-1CC2 ■-■■■■	61	0.029	13
5.5	6.3	132 M	970	54	IE2	IE2	86	87	86.5	0.76	12.1	1.9	5.6	2.6	63	75	1LE1 ■ 01-1CC3 ■-■■■■	70	0.037	16
7.5	8.6	160 M	975	73	IE2	IE2	87.2	88	87.3	0.74	16.8	1.9	4.7	2.2	67	79	1LE1 ■ 01-1DC2 ■-■■■■	106	0.075	16
11	12.6	160 L	975	108	IE2	IE2	88.7	89.6	89.2	0.76	23.5	1.9	4.8	2.2	67	79	1LE1 ■ 01-1DC4 ■-■■■■	122	0.098	16
15	18	180 L	975	147	IE2	IE2	89.7	90.1	89.5	0.78	31	2.5	6	3.1	57	70	1LE1 ■ 01-1EC4 ■-■■■■	155	0.17	16
18.5	22	200 L	978	181	IE2	IE1	90.4	91.3	91.2	0.82	36	2.4	5.8	2.6	63	76	1LE1 ■ 01-2AC4 ■-■■■■	200	0.25	16
22	26.5	200 L	978	215	IE2	IE1	90.9	91.6	91.2	0.82	42.5	2.5	6.2	2.6	63	76	1LE1 ■ 01-2AC5 ■-■■■■	220	0.3	16
30	36	225 M	980	292	IE2	IE1	91.7	92.5	92.3	0.83	57	2.5	5.6	2.7	65	78	1LE1 ■ 01-2BC2 ■-■■■■	300	0.58	16
37	44.5	250 M	982	360	IE2	IE1	92.2	93.1	93.1	0.83	70	2.8	6	2.5	62	77	1LE1 ■ 01-2CC2 ■-■■■■	370	0.86	16
45	54	280 S	985	436	IE2	IE1	92.7	93.4	93.2	0.84	83	2.7	6.3	2.6	65	79	1LE1 ■ 01-2DC0 ■-■■■■	460	1.1	16
55	66	280 M	985	533	IE2	IE1	93.1	93.9	94	0.86	99	2.5	6.4	2.6	65	79	1LE1 ■ 01-2DC2 ■-■■■■	510	1.37	16
75	90	315 S	988	725	IE2	IE1	93.7	94	93.6	0.84	138	2.5	6.7	2.8	65	79	1LE1 ■ 01-3AC0 ■-■■■■	660	2.1	16
90	108	315 M	988	870	IE2	IE1	94	94.3	93.6	0.84	165	2.6	6.9	2.8	65	79	1LE1 ■ 01-3AC2 ■-■■■■	730	2.5	16
110	132	315 L	988	1063	IE2	IE1	94.3	94.6	94.5	0.86	196	2.7	7	2.8	68	82	1LE1 ■ 01-3AC4 ■-■■■■	940	3.6	16
132	158	315 L	988	1276	IE2	IE2	94.6	94.9	94.7	0.86	235	3	7.5	2.9	69	84	1LE1 ■ 01-3AC5 ■-■■■■	990	4.02	16
160	192	315 L	988	1546	IE2	IE2	94.8	94.7	94.4	0.86	285	3.1	7.7	3.3	69	84	1LE1 ■ 01-3AC6 ■-■■■■	1160	4.7	16

	Relubrication	Motor protection	Fan cover	Bearing size	Liability for defects	
Basic Line	Optional (standard from FS 280 upwards)	Optional	Plastic	62 (63 from FS 280 upwards)	12 months	5
Performance Line	Standard from FS 160 (optional for FS 100 to 132)	Standard PTC	Steel	63	36 months	6

Voltages [2]			No. of poles	Frame size	Motor type	Version			Order code(s)
50 Hz	230 VΔ/400 VY	60 Hz [1]	6	71 M ... 315 L	1LE1■01-0C ... -3A	**Standard**	2	2	–
50 Hz	400 VΔ/690 VY	60 Hz [1]	6	71 M ... 315 L	1LE1■01-0C ... -3A	**Standard**	3	4	–
50 Hz	500 VY		6	71 M ... 315 L	1LE1■01-0C ... -3A	Without add. chrg.	2	7	–
50 Hz	500 VΔ		6	100 L ... 315 L	1LE1■01-1A ... -3A	Without add. chrg.	4	0	–
Further voltages [1]	For price information, code numbers, order codes and descriptions, see from Page 2/60						9	0	...

Types of construction		No. of poles	Frame size	Motor type	Version		Order code(s)
Without flange	IM B3 [3]	6	71 M ... 315 L	1LE1■01-0C ... -3A	**Standard**	A	–
With flange	IM B5 [3]	6	71 M ... 315 M	1LE1■01-0C ... -3A	With additional charge	F	–
With standard flange	IM B14 [3]	6	71 M ... 160 L	1LE1■01-0C ... -1D	With additional charge	K	–
Further types of construction	For price information, code letters and descriptions, see from Page 2/66					■	...

Motor protection	Line	No. of poles	Frame size	Motor type	Version		Order code(s)
Without	Only possible for **Basic Line**	6	71 M ... 315 L	1LE1501-0C ... -3A	**Standard**	A	–
PTC thermistor with 3 temperature sensors	**Basic Line**	6	71 M ... 315 L	1LE1501-0C ... -3A	With additional charge	B	–
	Performance Line	6	100 L ... 315 L	1LE1601-1A ... -3A	**Standard**	B	–
Further motor protection	For price information, code letters and descriptions, see from Page 2/71					■	...

Terminal box position	No. of poles	Frame size	Motor type	Version		Order code(s)
Terminal box at top	6	71 M ... 315 L	1LE1■01-0C ... -3A	**Standard**	4	–
Further terminal box positions	For price information, code numbers and descriptions, see from Page 2/73					

Special versions	No. of poles	Frame size	Motor type		Order code(s)
Forced-air cooled motors without ext. fan/fan cover (IC 416)	6	71 M ... 315 L	1LE1■01-0C ... -3A	1LE1■01-.... ■-■■■■-Z	F90+...+...+...
Options	For price information, order codes and descriptions, see from Page 2/80			1LE1■01-.... ■-■■■■-Z	...+...+...+...

[1] Operating values at rated output for 60 Hz are stored in the Drive Technology (DT) Configurator.

[2] Parallel supply lines are required in the case of connection to ≤ 240 V. For frame size 315 with connection to ≤ 240 V, due to the high current, a drilled, removable entry plate (Order code **R52**) or a larger terminal box (Order code **R50**) can be used. Order codes **R52** and **R50** alter the motor dimensions.

[3] Types derived from IM B3 (IM B6/7/8, IM V6 and IM V5), from IM B5 (IM V3 and IM V1) and from IM B14 (IM V19 and IM V18) are possible, provided that no requirement exists for stamping of the type on the rating plate. The basic type IM B3, IM B5 or IM B14 is stamped as standard on the rating plate. If mounted in a different position, the position must be specified to ensure that the condensation drainage holes are positioned correctly.

© Siemens AG 2015

2

Selection and ordering data (continued)

P_{rated}, 50 Hz	P_{rated}, 60 Hz [1]	Frame size	Operating values at rated output: n_{rated}, 50 Hz	T_{rated}, 50 Hz	IE class		η_{rated}, 50 Hz, 4/4	η_{rated}, 50 Hz, 3/4	η_{rated}, 50 Hz, 2/4	cos φ_{rated}, 50 Hz, 4/4	I_{rated}, 50 Hz, 400 V	T_{LR}/T_{rated}, 50 Hz	I_{LR}/I_{rated}, 50 Hz	T_B/T_{rated}, 50 Hz	L_{pfA}, 50 Hz	L_{WA}, 50 Hz	Cast-iron series **1LE1501** – *Basic Line* **1LE1601** – *Performance Line* *IE2 version in accordance with IEC 60034-30* Article No.	$m_{IM\ B3}$	J	Torque class
kW	kW	FS	rpm	Nm	50 Hz	60 Hz	%	%	%		A				dB(A)	dB(A)		kg	kgm^2	CL
• Cooling: self-ventilated (IC411) or with order code F90 forced-air cooled without external fan and fan cover (IC416) • Efficiency: IE2 High Efficiency, service factor (SF) 1.15 • Insulation: thermal class 155 (temperature class F), IP55 degree of protection, utilization in accordance with thermal class 130 (temperature class B)																				
8-pole: 750 rpm at 50 Hz, 900 rpm at 60 Hz [1]																				
0.09	0.11	71 M	630	1.4	–	–	40.1	40.6	35.8	0.67	0.50	1.7	1.6	1.7	59	63	▲ 1LE1 5 01-0CD2 ■-■■■■	11.5	0.00077	13
0.12	0.14	71 M	640	1.8	IE2	IE2	40.1	39.6	34.7	0.66	0.65	1.8	1.8	1.8	48	59	▲ 1LE1 5 01-0CD3 ■-■■■■	12.5	0.00100	13
0.18	0.21	80 M	690	2.5	IE2	IE2	45.9	43.6	37.8	0.60	0.93	1.7	2.2	2.1	51	62	▲ 1LE1 5 01-0DD2 ■-■■■■	16.5	0.00175	13
0.25	0.29	80 M	705	3.4	IE2	IE2	50.6	48.1	41.9	0.55	1.30	2.0	2.5	2.5	51	62	▲ 1LE1 5 01-0DD3 ■-■■■■	18.5	0.00246	16
0.37	0.43	90 S	675	5.2	IE2	IE2	56.1	55.6	49.6	0.71	1.34	1.4	2.6	1.7	53	65	▲ 1LE1 5 01-0ED0 ■-■■■■	20	0.00225	10
0.55	0.63	90 L	665	7.9	IE2	IE2	61.7	63.4	59.8	0.74	1.74	1.5	2.7	1.7	53	65	▲ 1LE1 5 01-0ED4 ■-■■■■	21.5	0.00305	13
0.75	0.86	100 L	705	10	IE2	IE2	66.2	66.2	62	0.61	2.7	1.5	3.2	2.1	60	72	1LE1 ■ 01-1AD4 ■-■■■■	32	0.0086	13
1.1	1.27	100 L	695	15	IE2	IE2	70.8	72.3	70.2	0.65	3.45	1.4	3.2	1.9	60	72	1LE1 ■ 01-1AD5 ■-■■■■	36	0.011	13
1.5	1.75	112 M	725	20	IE2	IE2	74.1	74.1	71	0.63	4.65	1.6	4	2.4	63	75	1LE1 ■ 01-1BD2 ■-■■■■	53	0.017	13
2.2	2.55	132 S	725	29	IE2	IE2	77.6	78.2	76.6	0.62	6.6	1.4	3.5	2	63	75	1LE1 ■ 01-1CD0 ■-■■■■	64	0.034	10
3	3.45	132 M	720	40	IE2	IE1	80	80.7	79.2	0.62	8.7	1.4	3.7	2	63	75	1LE1 ■ 01-1CD2 ■-■■■■	67	0.037	10
4	4.55	160 M	730	52	IE2	IE2	81.9	82.6	81.7	0.67	10.5	1.6	3.7	1.9	63	75	1LE1 ■ 01-1DD2 ■-■■■■	98	0.065	13
5.5	6.3	160 M	730	72	IE2	IE2	83.8	84.3	83.1	0.67	14.1	1.7	3.9	2	63	75	1LE1 ■ 01-1DD3 ■-■■■■	111	0.083	13
7.5	8.6	160 L	725	99	IE2	IE2	85.3	86.5	86.1	0.7	18.1	1.6	3.8	1.9	63	75	1LE1 ■ 01-1DD4 ■-■■■■	123	0.098	13
11	13.2	180 L	720	146	–	–	86.6	87.6	87.1	0.7	26	2.3	4.9	2.6	72	80	1LE1 ■ 01-1ED4 ■-■■■■	155	0.195	13
15	18	200 L	718	200	–	–	88.9	90.8	91.2	0.76	32	2.4	5.4	2.8	58	65	1LE1 ■ 01-2AD5 ■-■■■■	220	0.344	13
18.5	22	225 S	730	242	–	–	89	89.9	89.5	0.78	38.5	2.2	5.4	2.7	59	72	1LE1 ■ 01-2BD0 ■-■■■■	250	0.43	13
22	26.5	225 M	730	288	–	–	90.3	91.3	91.1	0.8	44	2.3	5.5	2.7	58	71	1LE1 ■ 01-2BD2 ■-■■■■	270	0.5	13
30	36	250 M	732	391	–	–	91.3	92.2	92	0.8	59	2.4	5.6	2.7	60	73	1LE1 ■ 01-2CD2 ■-■■■■	370	0.86	13
37	44.5	280 S	736	480	–	–	91.9	92.5	92.1	0.78	75	2.3	5.4	2.4	63	77	1LE1 ■ 01-2DD0 ■-■■■■	460	1.1	13
45	54	280 M	738	582	–	–	92.4	92.8	92.4	0.79	89	2.5	5.7	2.5	66	80	1LE1 ■ 01-2DD2 ■-■■■■	510	1.4	13
55	66	315 S	740	710	–	–	92.9	93.3	92.9	0.8	107	2.2	5.8	2.6	69	83	1LE1 ■ 01-3AD0 ■-■■■■	640	2	13
75	90	315 M	738	971	–	–	93.5	94.4	94.5	0.81	143	2.3	5.9	2.7	69	84	1LE1 ■ 01-3AD2 ■-■■■■	720	2.5	13
90	108	315 L	740	1161	–	–	93.5	94.3	94.4	0.83	167	2.2	5.8	2.5	69	84	1LE1 ■ 01-3AD4 ■-■■■■	860	3.1	13
110	132	315 L	740	1419	–	–	94.2	95	95.1	0.82	205	2.7	6.7	2.9	74	88	1LE1 ■ 01-3AD5 ■-■■■■	980	3.9	13
132	158	315 L	740	1703	–	–	94.4	94.8	94.4	0.81	250	2.9	7.2	3.3	76	90	1LE1 ■ 01-3AD6 ■-■■■■	1070	4.5	16

	Relubrication	Motor protection	Fan cover	Bearing size	Liability for defects		
Basic Line	Optional (standard from FS 280 upwards)	Optional	Plastic	62 (63 from FS 280 upwards)	12 months	5	
Performance Line	Standard from FS 160 (optional for FS 100 to 132)	Standard PTC	Steel	63	36 months	6	

Voltages [2]				No. of poles	Frame size	Motor type	Version				Order code(s)
50 Hz	230 VΔ/400 VY	60 Hz [1]	460 VY	8	71 M ... 315 L	1LE1■01-0C … -3A	**Standard**	2	2		–
50 Hz	400 VΔ/690 VY	60 Hz [1]	460 VΔ	8	71 M ... 315 L	1LE1■01-0C … -3A	**Standard**	3	4		–
50 Hz	500 VY			8	71 M ... 315 L	1LE1■01-0C … -3A	Without add. chrg.	2	7		–
50 Hz	500 VΔ			8	100 L ... 315 L	1LE1■01-1A … -3A	Without add. chrg.	4	0		–
Further voltages [1]		For price information, code numbers, order codes and descriptions, see from Page 2/60						9	0		. . .

Types of construction			No. of poles	Frame size	Motor type	Version			Order code(s)
Without flange	IM B3 [3]		8	71 M ... 315 L	1LE1■01-0C … -3A	**Standard**	A		–
With flange	IM B5 [3]		8	71 M ... 315 M	1LE1■01-0C … -3A	With additional charge	F		–
With standard flange	IM B14 [3]		8	71 M ... 160 L	1LE1■01-0C … -1D	With additional charge	K		–
Further types of construction		For price information, code letters and descriptions, see from Page 2/66					■		. . .

Motor protection	Line	No. of poles	Frame size	Motor type	Version			Order code(s)
Without	Only possible for **Basic Line**	8	71 M ... 315 L	1LE1501-0C … -3A	**Standard**	A		–
PTC thermistor with 3 temperature sensors	**Basic Line**	8	71 M ... 315 L	1LE1501-0C … -3A	With additional charge	B		–
	Performance Line	8	100 L ... 315 L	1LE1601-1A … -3A	**Standard**	B		–
Further motor protection	For price information, code letters and descriptions, see from Page 2/71					■		. . .

Terminal box position	No. of poles	Frame size	Motor type	Version		Order code(s)
Terminal box at top	8	71 M ... 315 L	1LE1■01-0C … -3A	**Standard**	4	–
Further terminal box positions	For price information, code numbers and descriptions, see from Page 2/73					

Special versions	No. of poles	Frame size	Motor type		Order code(s)
Forced-air cooled motors without ext. fan/fan cover (IC 416)	8	71 M ... 315 L	1LE1■01-0C … -3A	**1LE1■01-**. . . . ■-■■■■ **-Z**	**F90+**. . .+. . .+. . .
Options	For price information, order codes and descriptions, see from Page 2/80			**1LE1■01-**. . . . ■-■■■■ **-Z**	. . .+. . .+. . .+. . .

1) Operating values at rated output for 60 Hz are stored in the Drive Technology (DT) Configurator.

2) Parallel supply lines are required in the case of connection to ≤ 240 V. For frame size 315 with connection to ≤ 240 V, due to the high current, a drilled, removable entry plate (Order code **R52**) or a larger terminal box (Order code **R50**) can be used. Order codes **R52** and **R50** alter the motor dimensions.

3) Types derived from IM B3 (IM B6/7/8, IM V6 and IM V5), from IM B5 (IM V3 and IM V1) and from IM B14 (IM V19 and IM V18) are possible, provided that no requirement exists for stamping of the type on the rating plate. The basic type IM B3, IM B5 or IM B14 is stamped as standard on the rating plate. If mounted in a different position, the position must be specified to ensure that the condensation drainage holes are positioned correctly.

© Siemens AG 2015

Selection and ordering data

P_{rated}, 50 Hz	P_{rated}, 60 Hz [1]	Frame size	Operating values at rated output: n_{rated}, 50 Hz	T_{rated}, 50 Hz	IE class		η_{rated}, 50 Hz, 4/4	η_{rated}, 50 Hz, 3/4	η_{rated}, 50 Hz, 2/4	cos φ_{rated}, 50 Hz, 4/4	I_{rated}, 50 Hz, 400 V	T_{LR}/T_{rated}, 50 Hz	I_{LR}/I_{rated}, 50 Hz	T_B/T_{rated}, 50 Hz	L_{pfA}, 50 Hz	L_{WA}, 50 Hz	Cast-iron series **1LE1501** – *Basic Line* **1LE1601** – *Performance Line* *IE2 version in accordance with IEC 60034-30 with increased output* Article No.	$m_{IM\ B3}$	J	Torque class
kW	kW	FS	rpm	Nm	50 Hz	60 Hz	%	%	%		A				dB(A)	dB(A)		kg	kgm^2	CL
• Cooling: self-ventilated (IC411) • Efficiency: IE2 High Efficiency, service factor (SF) 1.15 • Insulation: thermal class 155 (temperature class F), IP55 degree of protection, utilization in accordance with thermal class 130 (temperature class B)																				
2-pole: 3000 rpm at 50 Hz, 3600 rpm at 60 Hz [1]																				
4	4.55	100 L	2905	13	IE2	IE2	85.8	85.8	84.8	0.86	7.8	2.5	7.6	3.5	67	79	1LE1 ■ 01-1AA6 ■-■■■■	45	0.0054	16
5.5	6.3	112 M	2945	18	IE2	IE2	87	87.8	87.4	0.88	10.4	2.3	8.5	3.8	69	81	1LE1 ■ 01-1BA6 ■-■■■■	53	0.012	16
11	12.6	132 M	2950	36	IE2	IE2	89.4	89.4	88.4	0.89	20	2.3	7.9	3.2	68	80	1LE1 ■ 01-1CA6 ■-■■■■	80	0.031	16
22	25.3	160 L	2955	71	IE2	IE2	91.3	91.3	90.3	0.89	39	3.1	8.4	3.7	70	82	1LE1 ■ 01-1DA6 ■-■■■■	126	0.068	16
30	33.5	180 L	2940	97.4	IE2	IE2	92	92.5	92.2	0.89	53	2.3	7.8	3.4	76	83	1LE1 ■ 01-1EA6 ■-■■■■	180	0.094	16
45	51	200 L	2950	145.7	IE2	IE2	92.9	93.4	93.1	0.87	81	2.5	7.1	3.2	77	84	1LE1 ■ 01-2AA6 ■-■■■■	245	0.176	16
55	62	225 M	2960	177	IE2	IE2	93.2	93.6	93.2	0.86	99	2.5	7	3.3	76	89	1LE1 ■ 01-2BA6 ■-■■■■	320	0.26	16
75	84	250 M	2970	241	IE2	IE2	93.8	93.6	92.6	0.84	136	2.2	7	3.3	75	89	1LE1 ■ 01-2CA6 ■-■■■■	390	0.463	13
110	123	280 M	2978	353	IE2	IE2	94.3	94.5	94.1	0.9	187	2.9	8.5	3.6	80	91	1LE1 ■ 01-2DA6 ■-■■■■	650	1.2	16
4-pole: 1500 rpm at 50 Hz, 1800 rpm at 60 Hz [1]																				
4	4.55	100 L	1460	26	IE2	IE2	86.6	86.6	85.6	0.8	8.3	2.2	7.5	3.5	60	72	1LE1 ■ 01-1AB6 ■-■■■■	46	0.014	16
5.5	6.3	112 M	1460	36	IE2	IE2	87.7	87.7	86.7	0.81	11.2	2.5	7.1	3.2	58	70	1LE1 ■ 01-1BB6 ■-■■■■	58	0.017	16
11	12.6	132 M	1465	72	IE2	IE2	89.8	89.8	88.8	0.84	21	2.6	7.7	3.1	64	76	1LE1 ■ 01-1CB6 ■-■■■■	80	0.046	16
18.5	21.3	160 L	1475	120	IE2	IE2	91.2	91.2	90.2	0.85	34.5	2.5	7.7	3.3	65	77	1LE1 ■ 01-1DB6 ■-■■■■	116	0.099	16
30	34.5	180 L	1465	195.5	IE2	IE2	92.3	93	92.9	0.81	58	2.5	7.3	3.3	70	77	1LE1 ■ 01-1EB6 ■-■■■■	185	0.159	16
37	42.5	200 L	1470	240.4	IE2	IE2	92.7	93.6	93.8	0.84	69	2.4	7	3	68	75	1LE1 ■ 01-2AB6 ■-■■■■	240	0.246	16
55	63	225 M	1475	356	IE2	IE2	93.5	94.2	94.1	0.84	101	2.5	5.8	2.7	69	82	1LE1 ■ 01-2BB6 ■-■■■■	320	0.47	16
75	86	250 M	1480	484	IE2	IE2	94	94.5	94.3	0.86	134	2.3	6.2	2.8	74	87	1LE1 ■ 01-2CB6 ■-■■■■	440	0.85	13
110	127	280 M	1485	707	IE2	IE2	94.5	94.9	94.8	0.87	193	2.5	6.9	3	73	87	1LE1 ■ 01-2DB6 ■-■■■■	680	1.7	13

	Relubrication	Motor protection	Fan cover	Bearing size	Liability for defects	
Basic Line	Optional (standard from FS 280 upwards)	Optional	Plastic	62 (63 from FS 280 upwards)	12 months	5
Performance Line	Standard from FS 160 (optional for FS 100 to 132)	Standard PTC	Steel	63	36 months	6

Voltages [2]			No. of poles	Frame size	Motor type	Version				Order code(s)
50 Hz	230 VΔ/400 VY	60 Hz [1] 460 VY	2, 4	100 L ... 280 M	1LE1■01-1A ... -2D	**Standard**	2	2		–
50 Hz	400 VΔ/690 VY	60 Hz [1] 460 VΔ	2, 4	100 L ... 280 M	1LE1■01-1A ... -2D	**Standard**	3	4		–
50 Hz	500 VY		2, 4	100 L ... 280 M	1LE1■01-1A ... -2D	Without add. chrg.	2	7		–
50 Hz	500 VΔ		2, 4	100 L ... 280 M	1LE1■01-1A ... -2D	Without add. chrg.	4	0		–
Further voltages [1]		For price information, code numbers, order codes and descriptions, see from Page 2/60					9	0		...

Types of construction		No. of poles	Frame size	Motor type	Version			Order code(s)
Without flange	IM B3 [3]	2, 4	100 L ... 280 M	1LE1■01-1A ... -2D	**Standard**	A		–
With flange	IM B5 [3]	2, 4	100 L ... 280 M	1LE1■01-1A ... -2D	With additional charge	F		–
With standard flange	IM B14 [3]	2, 4	100 L ... 280 M	1LE1■01-1A ... -2D	With additional charge	K		–
Further types of construction	For price information, code letters and descriptions, see from Page 2/66					■		...

Motor protection	Line	No. of poles	Frame size	Motor type	Version			Order code(s)
Without	Only possible for **Basic Line**	2, 4	100 L ... 280 M	1LE1501-1A ... -2D	**Standard**	A		–
PTC thermistor with 3 temperature sensors	**Basic Line**	2, 4	100 L ... 280 M	1LE1501-1A ... -2D	With additional charge	B		–
	Performance Line	2, 4	100 L ... 280 M	1LE1601-1A ... -2D	**Standard**	B		–
Further motor protection	For price information, code letters and descriptions, see from Page 2/71					■		...

Terminal box position	No. of poles	Frame size	Motor type	Version			Order code(s)
Terminal box at top	2, 4	100 L ... 280 M	1LE1■01-1A ... -2D	**Standard**	4		–
Further terminal box positions	For price information, code numbers and descriptions, see from Page 2/73						

Special versions	No. of poles	Frame size	Motor type		Order code(s)
Options	For price information, order codes and descriptions, see from Page 2/80		1LE1■01-	■-■■■■-Z	. . .+. . .+. . .+. . .

[1] Operating values at rated output for 60 Hz are stored in the Drive Technology (DT) Configurator.

[2] Parallel supply lines are required in the case of connection to ≤ 240 V. For frame size 315 with connection to ≤ 240 V, due to the high current, a drilled, removable entry plate (Order code **R52**) or a larger terminal box (Order code **R50**) can be used. Order codes **R52** and **R50** alter the motor dimensions.

[3] Types derived from IM B3 (IM B6/7/8, IM V6 and IM V5), from IM B5 (IM V3 and IM V1) and from IM B14 (IM V19 and IM V18) are possible, provided that no requirement exists for stamping of the type on the rating plate. The basic type IM B3, IM B5 or IM B14 is stamped as standard on the rating plate. If mounted in a different position, the position must be specified to ensure that the condensation drainage holes are positioned correctly.

© Siemens AG 2015

Selection and ordering data (continued)

P_{rated}, 50 Hz	P_{rated}, 60 Hz [1]	Frame size	Operating values at rated output: n_{rated}, 50 Hz	T_{rated}, 50 Hz	IE class		η_{rated}, 50 Hz, 4/4	η_{rated}, 50 Hz, 3/4	η_{rated}, 50 Hz, 2/4	cos φ_{rated}, 50 Hz, 4/4	I_{rated}, 50 Hz, 400 V	T_{LR}/T_{rated}, 50 Hz	I_{LR}/I_{rated}, 50 Hz	T_B/T_{rated}, 50 Hz	L_{pfA}, 50 Hz	L_{WA}, 50 Hz	Cast-iron series 1LE1501 – *Basic Line* 1LE1601 – *Performance Line* *IE2 version in accordance with IEC 60034-30 with increased output* Article No.	$m_{IM\ B3}$	J	Torque class
kW	kW	FS	rpm	Nm	50 Hz	60 Hz	%	%	%		A				dB(A)	dB(A)		kg	kgm²	CL
• Cooling: self-ventilated (IC411) • Efficiency: IE2 High Efficiency, service factor (SF) 1.15 • Insulation: thermal class 155 (temperature class F), IP55 degree of protection, utilization in accordance with thermal class 130 (temperature class B)																				
6-pole: 1000 rpm at 50 Hz, 1200 rpm at 60 Hz [1]																				
2.2	2.55	100 L	965	22	IE2	IE1	81.8	83.2	82.6	0.76	5.1	1.7	4.9	2.5	59	71	1LE1 ■ 01-1AC6 ■-■■■■	49	0.014	16
3	3.45	112 M	965	30	IE2	IE2	83.3	84	82.7	0.74	7	2.1	5.4	2.7	62	74	1LE1 ■ 01-1BC6 ■-■■■■	53	0.017	16
7.5	8.6	132 M	970	74	IE2	IE2	87.2	88	87.2	0.75	16.6	2	5.6	2.6	63	75	1LE1 ■ 01-1CC6 ■-■■■■	83	0.046	16
15	17.3	160 L	975	147	IE2	IE1	89.7	90.3	89.7	0.75	32	2	5.2	2.4	67	79	1LE1 ■ 01-1DC6 ■-■■■■	147	0.12	16
18.5	22	180 L	975	181.2	IE2	IE2	90.4	91.1	90.8	0.77	38.5	2.3	6	2.9	67	80	1LE1 ■ 01-1EC6 ■-■■■■	165	0.206	16
30	34.5	200 L	975	293.8	IE2	IE2	91.7	92.5	92.5	0.77	61	2.6	6.3	2.7	63	76	1LE1 ■ 01-2AC6 ■-■■■■	240	0.381	16
37	44.5	225 M	978	361	IE2	IE1	92.2	93	92.9	0.83	70	2.5	6.3	2.9	64	77	1LE1 ■ 01-2BC6 ■-■■■■	325	0.67	16
45	54	250 M	985	436	IE2	IE1	92.7	93.7	94	0.84	83	2.4	6.6	2.7	67	81	1LE1 ■ 01-2CC6 ■-■■■■	410	1	13
75	90	280 M	986	726	IE2	IE2	93.7	94.3	94.4	0.85	136	3.2	7	2.9	66	80	1LE1 ■ 01-2DC6 ■-■■■■	570	1.8	16
8-pole: 750 rpm at 50 Hz, 900 rpm at 60 Hz [1]																				
15	18	180 L	720	199	–	–	87.9	88.9	88.2	0.73	33.5	2.2	4.9	2.5	67	75	1LE1 ■ 01-1ED6 ■-■■■■	190	0.263	13
18.5	22	200 L	720	245	–	–	88.6	89.9	90.1	0.78	38.5	2.6	5.8	3	65	72	1LE1 ■ 01-2AD6 ■-■■■■	250	0.416	13
30	36	225 M	732	391	IE2	IE2	90.8	92	92.1	0.76	63	2.8	6.1	3.2	62	76	1LE1 ■ 01-2BD6 ■-■■■■	325	0.67	16
37	44.5	250 M	730	484	IE2	IE2	91.6	92.6	92.7	0.83	70	2.3	5.5	2.6	63	77	1LE1 ■ 01-2CD6 ■-■■■■	405	1	13
55	66	280 M	736	714	IE2	IE2	92.9	93.4	93	0.8	107	2.5	5.9	2.5	70	81	1LE1 ■ 01-2DD6 ■-■■■■	550	1.6	13

	Relubrication	Motor protection	Fan cover	Bearing size	Liability for defects		
Basic Line	Optional (standard from FS 280 upwards)	Optional	Plastic	62 (63 from FS 280 upwards)	12 months	5	
Performance Line	Standard from FS 160 (optional for FS 100 to 132)	Standard PTC	Steel	63	36 months	6	

Voltages [2]			No. of poles	Frame size	Motor type	Version			Order code(s)
50 Hz	230 VΔ/400 VY	60 Hz [1] 460 VY	6, 8	100 L ... 280 M	1LE1■01-1A ... -2D	**Standard**	2	2	–
50 Hz	400 VΔ/690 VY	60 Hz [1] 460 VΔ	6, 8	100 L ... 280 M	1LE1■01-1A ... -2D	**Standard**	3	4	–
50 Hz	500 VY		6, 8	100 L ... 280 M	1LE1■01-1A ... -2D	Without add. chrg.	2	7	–
50 Hz	500 VΔ		6, 8	100 L ... 280 M	1LE1■01-1A ... -2D	Without add. chrg.	4	0	–
Further voltages [1]	For price information, code numbers, order codes and descriptions, see from Page 2/60						9	0	. . .

Types of construction		No. of poles	Frame size	Motor type	Version		Order code(s)
Without flange	IM B3 [3]	6, 8	100 L ... 280 M	1LE1■01-1A ... -2D	**Standard**	A	–
With flange	IM B5 [3]	6, 8	100 L ... 280 M	1LE1■01-1A ... -2D	With additional charge	F	–
With standard flange	IM B14 [3]	6, 8	100 L ... 280 M	1LE1■01-1A ... -2D	With additional charge	K	–
Further types of construction	For price information, code letters and descriptions, see from Page 2/66					■	. . .

Motor protection	Line	No. of poles	Frame size	Motor type	Version		Order code(s)
Without	Only possible for **Basic Line**	6, 8	100 L ... 280 M	1LE1501-1A ... -2D	**Standard**	A	–
PTC thermistor with 3 temperature sensors	**Basic Line**	6, 8	100 L ... 280 M	1LE1501-1A ... -2D	With additional charge	B	–
	Performance Line	6, 8	100 L ... 280 M	1LE1601-1A ... -2D	**Standard**	B	–
Further motor protection	For price information, code letters and descriptions, see from Page 2/71					■	. . .

Terminal box position	No. of poles	Frame size	Motor type	Version		Order code(s)
Terminal box at top	6, 8	100 L ... 280 M	1LE1■01-1A ... -2D	**Standard**	4	–
Further terminal box positions	For price information, code numbers and descriptions, see from Page 2/73					

Special versions	No. of poles	Frame size	Motor type			Order code(s)
Options	For price information, order codes and descriptions, see from Page 2/80		1LE1■01-	■-■■■■	-Z	. . .+. . .+. . .+. . .

1) Operating values at rated output for 60 Hz are stored in the Drive Technology (DT) Configurator.

2) Parallel supply lines are required in the case of connection to ≤ 240 V. For frame size 315 with connection to ≤ 240 V, due to the high current, a drilled, removable entry plate (Order code **R52**) or a larger terminal box (Order code **R50**) can be used. Order codes **R52** and **R50** alter the motor dimensions.

3) Types derived from IM B3 (IM B6/7/8, IM V6 and IM V5), from IM B5 (IM V3 and IM V1) and from IM B14 (IM V19 and IM V18) are possible, provided that no requirement exists for stamping of the type on the rating plate. The basic type IM B3, IM B5 or IM B14 is stamped as standard on the rating plate. If mounted in a different position, the position must be specified to ensure that the condensation drainage holes are positioned correctly.

© Siemens AG 2015

Selection and ordering data

P_{rated}, 50 Hz	P_{rated}, 60 Hz	Frame size	Operating values at rated output: n_{rated}, 60 Hz	T_{rated}, 60 Hz	IE class	η_{rated}, 60 Hz, 4/4	η_{rated}, 60 Hz, 3/4	η_{rated}, 60 Hz, 2/4	cos φ_{rated}, 60 Hz, 4/4	I_{rated}, 60 Hz, 460 V	T_{LR}/T_{rated}, 60 Hz	I_{LR}/I_{rated}, 60 Hz	T_B/T_{rated}, 60 Hz	L_{pfA}, 60 Hz	L_{WA}, 60 Hz	**Cast-iron series 1LE1541** – *Basic Line IE2 version in accordance with IEC 60034-30* Article No.	$m_{IM\ B3}$	J	Torque class
kW	kW	FS	rpm	Nm			%	%		A				dB(A)	dB(A)	▲ New	kg	kgm²	CL
• Cooling: self-ventilated (IC411) or with order code F90 forced-air cooled without external fan and fan cover (IC416) • Insulation: thermal class 155 (temperature class F), IP55 degree of protection, utilization in accordance with thermal class 130 (temperature class B)																			
2-pole: 3000 rpm at 50 Hz, 3600 rpm at 60 Hz [1]																			
22	**24.5**	**180 M**	3550	59	IE2	91	91	89.6	0.86	36	3	8.4	4.1	81	84	▲ **1LE1 5 41-1EA2 ■-■■■■**	145	0.069	16
30	**33.5**	**200 L**	3565	80	IE2	91.7	91.2	89.6	0.86	47.5	2.9	7.7	3.8	82	85	▲ **1LE1 5 41-2AA4 ■-■■■■**	200	0.13	16
37	**41.5**	**200 L**	3565	99	IE2	92.4	92.1	91	0.87	58	3.3	8.1	3.8	82	85	▲ **1LE1 5 41-2AA5 ■-■■■■**	225	0.15	16
45	**51**	**225 M**	3570	120	IE2	93	92.7	91.3	0.88	69	3.1	8.7	3.8	77	89	▲ **1LE1 5 41-2BA2 ■-■■■■**	295	0.23	16
55	**62**	**250 M**	3575	147	IE2	93	92.5	91	0.89	85	2.4	7.4	3.5	80	89	▲ **1LE1 5 41-2CA2 ■-■■■■**	360	0.4	13
75	**84**	**280 S**	3580	200	IE2	93.6	92.9	91.1	0.87	115	2.8	7.7	3.5	81	89	▲ **1LE1 5 41-2DA0 ■-■■■■**	490	0.71	13
90	**101**	**280 M**	3578	240	IE2	94.5	94.2	93.1	0.88	141	2.7	7.9	3.4	81	89	▲ **1LE1 5 41-2DA2 ■-■■■■**	530	0.83	13
110	**123**	**315 S**	3585	293	IE2	94.5	94	92.5	0.9	165	2.6	7.9	3.3	82	91	▲ **1LE1 5 41-3AA0 ■-■■■■**	720	1.3	13
132	**148**	**315 M**	3585	352	IE2	95	94.7	93.6	0.91	190	2.7	8.1	3.4	82	91	▲ **1LE1 5 41-3AA2 ■-■■■■**	880	1.6	13
160	**180**	**315 L**	3585	400	IE2	95	94.6	93.3	0.92	215	2.9	8.3	3.5	84	95	▲ **1LE1 5 41-3AA4 ■-■■■■**	930	1.8	13
200	**224**	**315 L**	3550	59	IE2	91	91	89.6	0.86	36	3	8.4	4.1	81	84	▲ **1LE1 5 41-3AA5 ■-■■■■**	1130	2.2	13
4-pole: 1500 rpm at 50 Hz, 1800 rpm at 60 Hz [1]																			
18.5	**21.3**	**180 M**	1770	100	IE2	92.4	92.6	91.8	0.83	31	2.8	7.7	3.9	64	74	▲ **1LE1 5 41-1EB2 ■-■■■■**	160	0.12	16
22	**25.3**	**180 L**	1770	119	IE2	92.4	92.5	91.8	0.83	36.5	3	8.4	3.9	72	76	▲ **1LE1 5 41-1EB4 ■-■■■■**	170	0.13	16
30	**34.5**	**200 L**	1778	161	IE2	93	92.9	92.2	0.84	48	3.2	8.2	3.7	72	77	▲ **1LE1 5 41-2AB5 ■-■■■■**	230	0.2	16
37	**42.5**	**225 S**	1778	199	IE2	93	93.2	92.5	0.87	58	2.7	7.2	3.3	69	79	▲ **1LE1 5 41-2BB0 ■-■■■■**	280	0.42	16
45	**52**	**225 M**	1778	242	–	93.6	93.8	93.1	0.86	70	3	7.6	3.5	69	79	▲ **1LE1 5 41-2BB2 ■-■■■■**	305	0.46	16
55	**63**	**250 M**	1785	294	IE2	94.1	94.1	93.3	0.84	89	3.1	7.3	3.3	69	79	▲ **1LE1 5 41-2CB2 ■-■■■■**	385	0.75	16
75	**86**	**280 S**	1788	401	IE2	94.5	94.3	93.2	0.87	114	2.7	7.6	3.2	79	85	▲ **1LE1 5 41-2DB0 ■-■■■■**	550	1.3	16
90	**104**	**280 M**	1788	481	IE2	94.5	94.3	93.3	0.87	142	2.9	8.1	3.4	78	85	▲ **1LE1 5 41-2DB2 ■-■■■■**	570	1.4	16
110	**127**	**315 S**	1790	587	–	95	94.8	93.8	0.86	172	3.1	8	3.3	79	86	▲ **1LE1 5 41-3AB0 ■-■■■■**	740	2	16
132	**152**	**315 M**	1790	704	IE2	95	94.8	94	0.86	200	3.1	7.8	3.2	79	89	▲ **1LE1 5 41-3AB2 ■-■■■■**	870	2.3	16
160	**184**	**315 L**	1790	800	IE2	95	94.7	93.5	0.87	225	3.5	8.6	3.6	80	91	▲ **1LE1 5 41-3AB4 ■-■■■■**	940	2.8	16
200	**230**	**315 L**	1792	986	IE2	95	94.7	93.6	0.86	285	4.3	9.3	3.9	84	92	▲ **1LE1 5 41-3AB5 ■-■■■■**	1140	3.5	16

Voltages 600 V [1]				No. of poles	Frame size	Motor type	Version				Order code(s)
50 Hz	230 VΔ/400 VY	60 Hz	460 VY	2, 4	180 M ... 315 L	1LE1541-1E ... -3A	**Standard**	**2**	**2**		–
50 Hz	400 VΔ	60 Hz	460 VΔ	2, 4	180 M ... 315 L	1LE1541-1E ... -3A	**Standard**	**3**	**4**		–
50 Hz	500 VY			2, 4	180 M ... 315 L	1LE1541-1E ... -3A	Without add. chrg.	**2**	**7**		–
50 Hz	500 VΔ			2, 4	180 M ... 315 L	1LE1541-1E ... -3A	Without add. chrg.	**4**	**0**		–
Further voltages		For price information, code numbers, order codes and descriptions, see from Page 2/60						**9**	**0**		. . .
Types of construction [2]				No. of poles	Frame size	Motor type	Version				Order code(s)
With flange	IM B5 [3]			2, 4	180 M ... 315 L	1LE1541-1E ... -3A	With additional charge			**F**	–
With standard flange	IM B14 [3]			2, 4	180 M ... 315 L	1LE1541-1E ... -1D	With additional charge			**K**	–
Further types of construction		For price information, code letters and descriptions, see from Page 2/66								**Z**	. . .
Motor protection	Line			No. of poles	Frame size	Motor type	Version				Order code(s)
Without	Only possible for **Basic Line**			2, 4	180 M ... 315 L	1LE1541-1E ... -3A	**Standard**			**A**	–
PTC thermistor with 3 temperature sensors	**Basic Line**			2, 4	180 M ... 315 L	1LE1541-1E ... -3A	With additional charge			**B**	–
Further motor protection		For price information, code letters and descriptions, see from Page 2/71								**Z**	. . .
Terminal box position				No. of poles	Frame size	Motor type	Version				Order code(s)
Terminal box at top				2, 4	180 M ... 315 L	1LE1541-1E ... -3A	**Standard**			**4**	–
Further terminal box positions		For price information, code numbers and descriptions, see from Page 2/73									
Special versions				No. of poles	Frame size	Motor type					Order code(s)
Forced-air cooled motors without ext. fan/fan cover (IC416)				2, 4	180 M ... 315 L	1LE1541-1E ... -3A	**1LE1541-. . . .**	**■-■■■■**		**-Z**	**F90** +. . .+. . .+. . .
Options		For price information, order codes and descriptions, see from Page 2/80					**1LE1541-. . . .**	**■-■■■■**		**-Z**	. . .+. . .+. . .+. . .

[1] Operating voltages only ≤ 600 V admissible in accordance with MG1 Table 12-11.
Parallel supply lines are required in the case of connection to ≤ 240 V.
For frame size 315 with connection to ≤ 240 V, due to the high current, a drilled, removable entry plate (Order code **R52**) or a larger terminal box (Order code **R50**) can be used. Order codes **R52** and **R50** alter the motor dimensions.

[2] Types of construction with feet are not possible for 2-pole, 4-pole and 6-pole motors ≤ 200 hp in accordance with MG1 Table 12-11.

[3] Types derived from IM B5 (IM V3 and IM V1) and from IM B14 (IM V19 and IM V18) are possible, provided that no requirement exists for stamping of the type on the rating plate. The basic type IM B5 or IM B14 is stamped as standard on the rating plate. If mounted in a different position, the position must be specified to ensure that the condensation drainage holes are positioned correctly.

© Siemens AG 2015

Selection and ordering data (continued)

P_{rated}, 50 Hz	P_{rated}, 60 Hz	Frame size	Operating values at rated output: n_{rated}, 60 Hz	T_{rated}, 60 Hz	IE class	η_{rated}, 60 Hz, 4/4	η_{rated}, 60 Hz, 3/4	η_{rated}, 60 Hz, 2/4	cos φ_{rated}, 60 Hz, 4/4	I_{rated}, 60 Hz, 460 V	T_{LR}/T_{rated}, 60 Hz	I_{LR}/I_{rated}, 60 Hz	T_B/T_{rated}, 60 Hz	L_{pfA}, 60 Hz	L_{WA}, 60 Hz	Cast-iron series 1LE1541 – *Basic Line IE2 version in accordance with IEC 60034-30* Article No.	$m_{IM\ B3}$	J	Torque class
kW	kW	FS	rpm	Nm			%	%		A				dB(A)	dB(A)	▲ New	kg	kgm²	CL
• Cooling: self-ventilated (IC411) or with order code F90 forced-air cooled without external fan and fan cover (IC416) • Insulation: thermal class 155 (temperature class F), IP55 degree of protection, utilization in accordance with thermal class 130 (temperature class B)																			
6-pole: 1000 rpm at 50 Hz, 1200 rpm at 60 Hz [1]																			
15	18	180 L	1178	122	IE2	90.2	90.2	89	0.77	27	2.8	6.9	3.4	60	76	▲ 1LE1 5 41-1EC4 ■-■■■■	155	0.17	16
18.5	22	200 L	1182	149	IE2	91.7	92.1	91.5	0.81	31.5	2.6	6.7	3	66	79	▲ 1LE1 5 41-2AC4 ■-■■■■	200	0.25	16
22	26.5	200 L	1182	178	IE2	91.7	92.1	91.5	0.81	38	3	7.4	3	66	79	▲ 1LE1 5 41-2AC5 ■-■■■■	220	0.3	16
30	36	225 M	1182	242	IE2	93	93.3	92.6	0.83	48.5	2.9	7	3.1	66	78	▲ 1LE1 5 41-2BC2 ■-■■■■	300	0.58	16
37	44.5	250 M	1185	298	IE2	93	93.3	92.6	0.83	61	3.3	7.3	2.8	66	77	▲ 1LE1 5 41-2CC2 ■-■■■■	370	0.86	16
45	54	280 S	1188	362	IE2	93.6	93.8	93.1	0.84	71	3.1	7.4	3	67	79	▲ 1LE1 5 41-2DC0 ■-■■■■	460	1.1	16
55	66	280 M	1188	442	IE2	93.6	93.9	93.4	0.85	88	3.1	7.2	2.9	67	79	▲ 1LE1 5 41-2DC2 ■-■■■■	510	1.37	16
75	90	315 S	1190	602	IE2	94.1	94.1	93.2	0.83	120	2.7	7.5	3	67	79	▲ 1LE1 5 41-3AC0 ■-■■■■	660	2.1	16
90	108	315 M	1190	722	IE2	94.1	94.4	93.5	0.84	148	2.9	7.6	3.1	68	79	▲ 1LE1 5 41-3AC2 ■-■■■■	730	2.5	16
110	132	315 L	1190	883	IE2	95	95	94.6	0.85	174	3.3	8.1	3.2	69	82	▲ 1LE1 5 41-3AC4 ■-■■■■	940	3.6	16
132	158	315 L	1190	1059	IE2	95	95	94.4	0.85	205	3.7	9.2	3.6	69	84	▲ 1LE1 5 41-3AC5 ■-■■■■	990	4.02	16

Voltages 600 V [1]				No. of poles	Frame size	Motor type	Version					Order code(s)
50 Hz	230 VΔ/400 VY	60 Hz	460 VY	6	180 L ... 315 L	1LE1541-1E ... -3A	**Standard**	2	2			–
50 Hz	400 VΔ	60 Hz	460 VΔ	6	180 L ... 315 L	1LE1541-1E ... -3A	**Standard**	3	4			–
50 Hz	500 VY			6	180 L ... 315 L	1LE1541-1E ... -3A	Without add. chrg.	2	7			–
50 Hz	500 VΔ			6	180 L ... 315 L	1LE1541-1E ... -3A	Without add. chrg.	4	0			–
Further voltages		For price information, code numbers, order codes and descriptions, see from Page 2/60						9	0			. . .
Types of construction [2]				No. of poles	Frame size	Motor type	Version					Order code(s)
With flange	IM B5 [3]			6	180 L ... 315 L	1LE1541-1E ... -3A	With additional charge			F		–
With standard flange	IM B14 [3]			6	180 L ... 160 L	1LE1541-1E ... -1D	With additional charge			K		–
Further types of construction		For price information, code letters and descriptions, see from Page 2/66								Z		. . .
Motor protection	Line			No. of poles	Frame size	Motor type	Version					Order code(s)
Without	Only possible for **Basic Line**			6	180 L ... 315 L	1LE1541-1E ... -3A	**Standard**			A		–
PTC thermistor with 3 temperature sensors	**Basic Line**			6	180 L ... 315 L	1LE1541-1E ... -3A	With additional charge			B		–
Further motor protection		For price information, code letters and descriptions, see from Page 2/71								Z		. . .
Terminal box position				No. of poles	Frame size	Motor type	Version					Order code(s)
Terminal box at top				6	180 L ... 315 L	1LE1541-1E ... -3A	**Standard**				4	–
Further terminal box positions		For price information, code numbers and descriptions, see from Page 2/73										
Special versions				No. of poles	Frame size	Motor type						Order code(s)
Forced-air cooled motors without ext. fan/fan cover (IC416)				6	180 M ... 315 L	1LE1541-1E ... -3A	**1LE1541-. . . .** ■-■■■■				-Z	**F90** +. . .+. . .+. . .
Options		For price information, order codes and descriptions, see from Page 2/80					**1LE1541-. . . .** ■-■■■■				-Z	. . .+. . .+. . .+. . .

[1] Operating voltages only ≤ 600 V admissible in accordance with MG1 Table 12-11.
Parallel supply lines are required in the case of connection to ≤ 240 V.
For frame size 315 with connection to ≤ 240 V, due to the high current, a drilled, removable entry plate (Order code **R52**) or a larger terminal box (Order code **R50**) can be used. Order codes **R52** and **R50** alter the motor dimensions.

[2] Types of construction with feet are not possible for 2-pole, 4-pole and 6-pole motors ≤ 200 hp in accordance with MG1 Table 12-11.

[3] Types derived from IM B5 (IM V3 and IM V1) and from IM B14 (IM V19 and IM V18) are possible, provided that no requirement exists for stamping of the type on the rating plate. The basic type IM B5 or IM B14 is stamped as standard on the rating plate. If mounted in a different position, the position must be specified to ensure that the condensation drainage holes are positioned correctly.

© Siemens AG 2015

Selection and ordering data

P_{rated}, 50 Hz	P_{rated}, 60 Hz	Frame size	Operating values at rated output: n_{rated}, 60 Hz	T_{rated}, 60 Hz	IE class	η_{rated}, 60 Hz, 4/4	η_{rated}, 60 Hz, 3/4	η_{rated}, 60 Hz, 2/4	cos φ_{rated}, 60 Hz, 4/4	I_{rated}, 60 Hz, 460 V	T_{LR}/T_{rated}, 60 Hz	I_{LR}/I_{rated}, 60 Hz	T_B/T_{rated}, 60 Hz	L_{pfA}, 60 Hz	L_{WA}, 60 Hz	Cast-iron series **1LE1541** – *Basic Line IE2 version in accordance with IEC 60034-30 with increased output* Article No.	$m_{IM\ B3}$	J	Torque class
kW	kW	FS	rpm	Nm			%	%		A				dB(A)	dB(A)	▲ New	kg	kgm²	CL
• Cooling: self-ventilated (IC411) or with order code F90 forced-air cooled without external fan and fan cover (IC416) • Insulation: thermal class 155 (temperature class F), IP55 degree of protection, utilization in accordance with thermal class 130 (temperature class B)																			
2-pole: 3000 rpm at 50 Hz, 3600 rpm at 60 Hz [1]																			
30	**33.5**	**180 L**	3550	80.7	IE2	91.7	91.9	91.2	0.89	46	2.5	8.5	3.7	81	83	▲ **1LE1 5 41-1EA6 ■-■■■■**	180	0.094	16
45	**51**	**200 L**	3560	121	IE2	93	93.2	92.6	0.86	70	3	8.4	3.7	82	84	▲ **1LE1 5 41-2AA6 ■-■■■■**	245	0.176	16
55	**62**	**225 M**	3565	147.3	IE2	93	92.8	91.8	0.86	88	2.8	7.9	3.6	77	89	▲ **1LE1 5 41-2BA6 ■-■■■■**	320	0.26	16
75	**84**	**250 M**	3578	200	IE2	93.6	93.1	91.6	0.85	118	2.4	7.7	3.5	80	89	▲ **1LE1 5 41-2CA6 ■-■■■■**	390	0.463	13
110	**123**	**280 M**	3582	293	–	94.5	94.4	93.5	0.9	165	3.5	9.6	3.9	82	91	▲ **1LE1 5 41-2DA6 ■-■■■■**	650	1.2	16
4-pole: 1500 rpm at 50 Hz, 1800 rpm at 60 Hz [1]																			
30	**34.5**	**180 L**	1770	161.8	IE2	93	93.3	92.7	0.8	51	2.6	8.7	3.9	71	77	▲ **1LE1 5 41-1EB6 ■-■■■■**	185	0.159	16
37	**42.5**	**200 L**	1775	199	IE2	93	93.5	93.2	0.84	60	2.6	8.4	3.3	71	75	▲ **1LE1 5 41-2AB6 ■-■■■■**	240	0.246	16
55	**63**	**225 M**	1780	295	IE2	94.1	94.4	94	0.84	89	2.8	7.1	3	72	82	▲ **1LE1 5 41-2BB6 ■-■■■■**	320	0.47	16
75	**86**	**250 M**	1785	401	IE2	94.5	94.6	94	0.85	117	2.6	7.1	3.1	76	87	▲ **1LE1 5 41-2CB6 ■-■■■■**	440	0.85	13
110	**127**	**280 M**	1786	588	IE2	95	95.1	94.5	0.86	172	2.9	7.9	3.3	80	87	▲ **1LE1 5 41-2DB6 ■-■■■■**	680	1.7	13
6-pole: 1000 rpm at 50 Hz, 1200 rpm at 60 Hz [1]																			
18.5	**22**	**180 L**	1180	150	IE2	91.7	92	91.2	0.75	34	2.6	7	3.4	70	83	▲ **1LE1 5 41-1EC6 ■-■■■■**	165	0.206	16
30	**34.5**	**200 L**	1180	243	IE2	93	93.4	92.9	0.77	52	2.9	7.4	3.1	66	79	▲ **1LE1 5 41-2AC6 ■-■■■■**	240	0.381	16
37	**44.5**	**225 M**	1182	299	IE2	93	93.3	92.8	0.82	61	2.8	7.3	3.2	66	77	▲ **1LE1 5 41-2BC6 ■-■■■■**	325	0.67	16
45	**54**	**250 M**	1186	362	IE2	93.6	94.7	95	0.84	71	2.7	7.8	3	70	81	▲ **1LE1 5 41-2CC6 ■-■■■■**	410	1	13
75	**90**	**280 M**	1188	603	IE2	94.1	94.3	93.9	0.84	118	3.7	8	3.2	69	80	▲ **1LE1 5 41-2DC6 ■-■■■■**	570	1.8	16
160	**192**	**315 L**	1192	1202	IE2	95	94.9	94.2	0.85	230	4.3	9.6	3.8	72	84	▲ **1LE1 5 41-3AC6 ■-■■■■**	1160	4.7	16

Voltages 600 V [1]				No. of poles	Frame size	Motor type	Version				Order code(s)
50 Hz	230 VΔ/400 VY	60 Hz	460 VY	2, 4, 6	180 L ... 315 L	1LE1541-1E ... -3A	**Standard**	**2**	**2**		–
50 Hz	400 VΔ	60 Hz	460 VΔ	2, 4, 6	180 L ... 315 L	1LE1541-1E ... -3A	**Standard**	**3**	**4**		–
50 Hz	500 VY			2, 4, 6	180 L ... 315 L	1LE1541-1E ... -3A	Without add. chrg.	**2**	**7**		–
50 Hz	500 VΔ			2, 4, 6	180 L ... 315 L	1LE1541-1E ... -3A	Without add. chrg.	**4**	**0**		–
Further voltages		For price information, code numbers, order codes and descriptions, see from Page 2/60						**9**	**0**		. . .

Types of construction [2]			No. of poles	Frame size	Motor type	Version				Order code(s)
With flange	IM B5 [3]		2, 4, 6	180 L ... 315 L	1LE1541-1E ... -3A	With additional charge			**F**	–
With standard flange	IM B14 [3]		2, 4, 6	180 L ... 315 L	1LE1541-1E ... -1D	With additional charge			**K**	–
Further types of construction		For price information, code letters and descriptions, see from Page 2/66							**Z**	. . .

Motor protection	Line	No. of poles	Frame size	Motor type	Version				Order code(s)
Without	Only possible for **Basic Line**	2, 4, 6	180 L ... 315 L	1LE1541-1E ... -3A	**Standard**			**A**	–
PTC thermistor with 3 temperature sensors	**Basic Line**	2, 4, 6	180 L ... 315 L	1LE1541-1E ... -3A	With additional charge			**B**	–
Further motor protection	For price information, code letters and descriptions, see from Page 2/71							**Z**	. . .

Terminal box position	No. of poles	Frame size	Motor type	Version				Order code(s)
Terminal box at top	2, 4, 6	180 L ... 315 L	1LE1541-1E ... -3A	**Standard**			**4**	–
Further terminal box positions	For price information, code numbers and descriptions, see from Page 2/73							

Special versions	No. of poles	Frame size	Motor type					Order code(s)
Forced-air cooled motors without ext. fan/fan cover (IC416)	2, 4, 6	180 M ... 315 L	1LE1541-1E ... -3A	**1LE1541-. . . .**	■	■■■■	**-Z**	**F90** +. . .+. . .+. . .
Options	For price information, order codes and descriptions, see from Page 2/80			**1LE1541-. . . .**	■	■■■■	**-Z**	. . .+. . .+. . .+. . .

[1] Operating voltages only ≤ 600 V admissible in accordance with MG1 Table 12-11.
Parallel supply lines are required in the case of connection to ≤ 240 V.
For frame size 315 with connection to ≤ 240 V, due to the high current, a drilled, removable entry plate (Order code **R52**) or a larger terminal box (Order code **R50**) can be used. Order codes **R52** and **R50** alter the motor dimensions.

[2] Types of construction with feet are not possible for 2-pole, 4-pole and 6-pole motors ≤ 200 hp in accordance with MG1 Table 12-11.

[3] Types derived from IM B5 (IM V3 and IM V1) and from IM B14 (IM V19 and IM V18) are possible, provided that no requirement exists for stamping of the type on the rating plate. The basic type IM B5 or IM B14 is stamped as standard on the rating plate. If mounted in a different position, the position must be specified to ensure that the condensation drainage holes are positioned correctly.

© Siemens AG 2015

Selection and ordering data

P_{rated}, 50 Hz	P_{rated}, 60 Hz [1]	Frame size	n_{rated}, 50 Hz	T_{rated}, 50 Hz	IE class		η_{rated}, 50 Hz, 4/4	η_{rated}, 50 Hz, 3/4	η_{rated}, 50 Hz, 2/4	cos φ_{rated}, 50 Hz, 4/4	I_{rated}, 50 Hz, 400 V	T_{LR}/T_{rated}, 50 Hz	I_{LR}/I_{rated}, 50 Hz	T_B/T_{rated}, 50 Hz	L_{pfA}, 50 Hz	L_{WA}, 50 Hz	Aluminum series 1LE1003 – *IE3 version in accordance with IEC 60034-30* Article No.	$m_{IM\ B3}$	J	Torque class
kW	kW	FS	rpm	Nm	50 Hz	60 Hz	%	%	%		A				dB(A)	dB(A)	▲ New	kg	kgm²	CL
• Cooling: self-ventilated (IC411) • Efficiency: IE3 Premium Efficiency, service factor (SF) 1.15 • Insulation: thermal class 155 (temperature class F), IP55 degree of protection, utilization in accordance with thermal class 130 (temperature class B)																				
2-pole: 3000 rpm at 50 Hz, 3600 rpm at 60 Hz [1]																				
0.75	0.86	80 M	2850	2.5	IE3	IE3	80.7	82	81.5	0.86	1.56	2.6	6.2	3	60	71	1LE1003-0DA2■-■■■■	11	0.0011	16
1.1	1.27	80 M	2885	3.6	IE3	IE3	82.7	82.7	81.7	0.85	2.25	2.8	7.4	3.8	60	71	1LE1003-0DA3■-■■■■	12	0.0013	16
1.5	1.75	90 S	2910	4.9	IE3	IE3	84.2	84.5	83.5	0.86	3	2.7	8.1	4.2	65	77	1LE1003-0EA0■-■■■■	15	0.0021	16
2.2	2.55	90 L	2910	7.2	IE3	IE3	85.9	86.8	86.1	0.88	4.2	2.6	8.3	4	65	77	1LE1003-0EA4■-■■■■	19	0.0031	16
3	3.45	100 L	2920	9.8	IE3	IE2	87.1	87.1	86.1	0.88	5.6	2.8	8	4.3	67	79	1LE1003-1AA4■-■■■■	26	0.0054	16
4	4.55	112 M	2945	13	IE3	IE2	88.1	89.1	88.7	0.9	7.3	1.8	8.2	3.5	69	81	1LE1003-1BA2■-■■■■	34	0.012	16
5.5	6.3	132 S	2950	17.8	IE3	IE3	89.2	89.2	88.2	0.9	9.9	1.8	7.4	3.6	68	80	1LE1003-1CA0■-■■■■	43	0.024	16
7.5	8.6	132 S	2950	24.3	IE3	IE3	90.1	90.1	89.1	0.92	13.1	1.9	8.3	3.9	68	80	1LE1003-1CA1■-■■■■	57	0.031	16
11	12.6	160 M	2955	35.5	IE3	IE3	91.2	91.2	90.2	0.89	19.6	2.4	7.9	3.8	70	82	1LE1003-1DA2■-■■■■	75	0.053	16
15	17.3	160 M	2960	48.4	IE3	IE3	91.9	91.9	90.9	0.87	27	2.7	8.7	4.3	70	82	1LE1003-1DA3■-■■■■	84	0.061	16
18.5	21.3	160 L	2955	60	IE3	IE3	92.4	92.4	91.4	0.9	32	2.8	9	4.2	70	82	1LE1003-1DA4■-■■■■	94	0.068	16
22	24.5	180 M	2950	71	IE3	IE3	92.7	93	92.4	0.89	38.5	2.3	7.5	3.5	73	80	▲ 1LE1003-1EA2■-■■■■	122	0.08	16
30	33.5	200 L	2955	97	IE3	IE3	93.3	93.7	93.3	0.87	53	2.5	7	3.3	73	80	▲ 1LE1003-2AA4■-■■■■	173	0.134	16
37	41.5	200 L	2955	120	IE3	IE3	93.7	94.1	93.8	0.88	65	2.5	7.1	3.2	74	81	▲ 1LE1003-2AA5■-■■■■	194	0.158	16

Voltages				Motor protection	No. of poles	Frame size	Motor type	Version					Order code(s)
Frame sizes 80 M to 90 L: use of the 360° freely rotatable terminal box for 2 and 4-pole motors [2]													
50 Hz	230 VΔ/400 VY	60 Hz [1]	460 VY	PTC thermistor with 1 temp. sensor	2	80 M ... 90 L	1LE1003-0D ... -0E	**Standard**	2	2			–
50 Hz	400 VΔ/690 VY	60 Hz [1]	460 VΔ		2	80 M ... 90 L	1LE1003-0D ... -0E	**Standard**	3	4			–
50 Hz	400 VY	60 Hz [1]	460 VY	Without	2	80 M ... 90 L	1LE1003-0D ... -0E	**Standard**	0	2			–
Frame sizes 100 L to 200 L: use of the 4 x 90° rotatable terminal box													
50 Hz	230 VΔ/400 VY	60 Hz[1]	460 VY	Any	2	100 L ... 200 L	1LE1003-1A ... -2A	**Standard**	2	2			–
50 Hz	400 VΔ/690 VY	60 Hz[1]	460 VΔ	Any	2	100 L ... 200 L	1LE1003-1A ... -2A	**Standard**	3	4			–
50 Hz	500 VY			Any	2	100 L ... 200 L	1LE1003-1A ... -2A	Without add. charge	2	7			–
50 Hz	500 VΔ			Any	2	100 L ... 200 L	1LE1003-1A ... -2A	Without add. charge	4	0			–
Further voltages [1]				For price information, code numbers, order codes and descriptions, see from Page 2/57					9	0			. . .

Types of construction		No. of poles	Frame size	Motor type	Version					Order code(s)
Without flange	IM B3 [3]	2	80 M ... 200 L	1LE1003-0D ... -2A	**Standard**			A		–
With flange	IM B5 [3]	2	80 M ... 200 L	1LE1003-0D ... -2A	With additional charge			F		–
With standard flange	IM B14 [3]	2	80 M ... 160 L	1LE1003-0D ... -2A	With additional charge			K		–
Further types of construction	For price information, code letters and descriptions, see from Page 2/62							■		. . .

Motor protection	No. of poles	Frame size	Motor type	Version					Order code(s)
Frame sizes 100 L to 200 L: use of the 4 x 90° rotatable terminal box									
Without	2	100 L ... 200 L	1LE1003-0D ... -2A	**Standard**				A	–
PTC thermistor with 3 temperature sensors	2	100 L ... 200 L	1LE1003-0D ... -2A	With additional charge				B	–
Further motor protection	For price information, code letters and descriptions, see from Page 2/70							■	. . .

Terminal box position	No. of poles	Frame size	Motor type	Version					Order code(s)
Terminal box at top	2	80 M ... 200 L	1LE1003-0D ... -2A	**Standard**				4	–
Further terminal box positions	For price information, code numbers and descriptions, see from Page 2/72								

Special versions	No. of poles	Frame size	Motor type						Order code(s)
Options	For price information, order codes and descriptions, see from Page 2/74			1LE1003- . . . . ■-■■■■				-Z	. . .+. . .+. . .+. . .

[1] Operating values at rated output for 60 Hz are stored in the Drive Technology (DT) Configurator.

[2] For converter operation of shaft heights 80 and 90, ordering with PTC thermistors and their connection to the converter is recommended.

[3] Types derived from IM B3 (IM B6/7/8, IM V6 and IM V5), from IM B5 (IM V3 and IM V1) and from IM B14 (IM V19 and IM V18) are possible, provided that no requirements exist for condensation drainage holes (**H03**) and stamping of the type on the rating plate. The basic type IM B3, IM B5 or IM B14 is stamped as standard on the rating plate. When ordering with condensation drainage holes (**H03**), the type must be specified.

© Siemens AG 2015

Selection and ordering data (continued)

P_{rated}, 50 Hz	P_{rated}, 60 Hz 1)	Frame size	n_{rated}, 50 Hz	T_{rated}, 50 Hz	IE class		η_{rated}, 50 Hz, 4/4	η_{rated}, 50 Hz, 3/4	η_{rated}, 50 Hz, 2/4	cos φ_{rated}, 50 Hz, 4/4	I_{rated}, 50 Hz, 400 V	T_{LR}/T_{rated}, 50 Hz	I_{LR}/I_{rated}, 50 Hz	T_B/T_{rated}, 50 Hz	L_{pfA}, 50 Hz	L_{WA}, 50 Hz	Aluminum series 1LE1003 – *IE3 version in accordance with IEC 60034-30* Article No.	$m_{IM\ B3}$	J	Torque class
kW	kW	FS	rpm	Nm	50 Hz	60 Hz	%	%	%		A				dB(A)	dB(A)	▲ New	kg	kgm^2	CL
• Cooling: self-ventilated (IC411) • Efficiency: IE3 Premium Efficiency, service factor (SF) 1.15 • Insulation: thermal class 155 (temperature class F), IP55 degree of protection, utilization in accordance with thermal class 130 (temperature class B)																				
4-pole: 1500 rpm at 50 Hz, 1800 rpm at 60 Hz 1)																				
0.55	0.63	80 M	1440	3.6	–	–	81.3	82	80.2	0.78	1.25	2.1	5.9	3.1	53	64	1LE1003-0DB2■-■■■■	11	0.0021	16
0.75	0.86	80 M	1450	4.9	IE3	IE2	82.5	82.5	81.5	0.75	1.75	2.7	7.1	3.9	53	64	1LE1003-0DB3■-■■■■	14	0.0029	16
1.1	1.27	90 S	1440	7.3	IE3	IE2	84.1	84.1	83.1	0.78	2.4	2.9	6.9	3.6	56	68	1LE1003-0EB0■-■■■■	16	0.0036	16
1.5	1.75	90 L	1445	9.9	IE3	IE3	85.3	85.9	84.9	0.8	3.15	2.6	7.2	2.7	56	68	1LE1003-0EB4■-■■■■	19	0.0049	16
2.2	2.55	100 L	1465	14.3	IE3	IE2	86.7	86.7	85.7	0.83	4.4	2.1	7.6	3.6	60	72	1LE1003-1AB4■-■■■■	30	0.014	16
3	3.45	100 L	1460	19.6	IE3	IE3	87.7	87.7	86.7	0.83	5.9	2.3	7.3	3.7	60	72	1LE1003-1AB5■-■■■■	30	0.014	16
4	4.55	112 M	1460	26	IE3	IE3	88.6	88.6	87.6	0.82	7.9	2.4	7.1	3.7	58	70	1LE1003-1BB2■-■■■■	34	0.017	16
5.5	6.3	132 S	1470	35.7	IE3	IE2	89.6	89.6	88.6	0.84	10.5	2.1	7.2	3.4	64	76	1LE1003-1CB0■-■■■■	64	0.046	16
7.5	8.6	132 M	1470	48.7	IE3	IE2	90.4	90.4	89.4	0.84	14.3	2.4	7.4	3.5	64	76	1LE1003-1CB2■-■■■■	64	0.046	16
11	12.6	160 M	1475	71	IE3	IE3	91.4	91.4	90.4	0.84	20.5	2.2	6.9	3.2	65	77	1LE1003-1DB2■-■■■■	83	0.083	16
15	17.3	160 L	1475	97	IE3	IE3	92.1	92.1	91.1	0.82	28.5	2.5	8.5	3.8	65	77	1LE1003-1DB4■-■■■■	100	0.099	16
18.5	21.3	180 M	1470	120	IE3	IE3	92.6	93.2	93.2	0.82	35	2.5	7.2	3.3	66	73	▲ 1LE1003-1EB2■-■■■■	134	0.13	16
22	25.3	180 L	1470	143	IE3	IE3	93	93.7	93.7	0.83	41	2.3	6.8	3.3	68	75	▲ 1LE1003-1EB4■-■■■■	142	0.14	16
30	34.5	200 L	1470	195	IE3	IE2	93.6	94.3	94.4	0.84	55	2.6	7.3	3.1	65	72	▲ 1LE1003-2AB5■-■■■■	189	0.22	16

Voltages				Motor protection	No. of poles	Frame size	Motor type	Version				Order code(s)
Frame sizes 80 M to 90 L: use of the 360° freely rotatable terminal box for 2 and 4-pole motors 2)												
50 Hz	230 VΔ/400 VY	60 Hz 1)	460 VY	PTC thermistor with 1 temp. sensor	4	80 M ... 90 L	1LE1003-0D ... -0E	**Standard**	2	2		–
50 Hz	400 VΔ/690 VY	60 Hz 1)	460 VΔ		4	80 M ... 90 L	1LE1003-0D ... -0E	**Standard**	3	4		–
50 Hz	400 VY	60 Hz 1)	460 VY	Without	4	80 M ... 90 L	1LE1003-0D ... -0E	**Standard**	0	2		–
Frame sizes 100 L to 200 L: use of the 4 x 90° rotatable terminal box												
50 Hz	230 VΔ/400 VY	60 Hz 1)	460 VY	Any	4	100 L ... 200 L	1LE1003-1A ... -2A	**Standard**	2	2		–
50 Hz	400 VΔ/690 VY	60 Hz 1)	460 VΔ	Any	4	100 L ... 200 L	1LE1003-1A ... -2A	**Standard**	3	4		–
50 Hz	500 VY			Any	4	100 L ... 200 L	1LE1003-1A ... -2A	Without add. charge	2	7		–
50 Hz	500 VΔ			Any	4	100 L ... 200 L	1LE1003-1A ... -2A	Without add. charge	4	0		–
Further voltages 1)				For price information, code numbers, order codes and descriptions, see from Page 2/57					9	0		. . .

Types of construction			No. of poles	Frame size	Motor type	Version				Order code(s)
Without flange	IM B3 3)		4	80 M ... 200 L	1LE1003-0D ... -2A	**Standard**			A	–
With flange	IM B5 3)		4	80 M ... 200 L	1LE1003-0D ... -2A	With additional charge			F	–
With standard flange	IM B14 3)		4	80 M ... 160 L	1LE1003-0D ... -2A	With additional charge			K	–
Further types of construction	For price information, code letters and descriptions, see from Page 2/62								■	. . .

Motor protection	No. of poles	Frame size	Motor type	Version				Order code(s)
Frame sizes 100 L to 200 L: use of the 4 x 90° rotatable terminal box								
Without	4	100 L ... 200 L	1LE1003-0D ... -2A	**Standard**			A	–
PTC thermistor with 3 temperature sensors	4	100 L ... 200 L	1LE1003-0D ... -2A	With additional charge			B	–
Further motor protection	For price information, code letters and descriptions, see from Page 2/70						■	. . .

Terminal box position	No. of poles	Frame size	Motor type	Version				Order code(s)
Terminal box at top	4	80 M ... 200 L	1LE1003-0D ... -2A	**Standard**			4	–
Further terminal box positions	For price information, code numbers and descriptions, see from Page 2/72							

Special versions	No. of poles	Frame size	Motor type					Order code(s)
Options	For price information, order codes and descriptions, see from Page 2/74			1LE1003-. . . . ■-■■■■			-Z	. . .+. . .+. . .+. . .

1) Operating values at rated output for 60 Hz are stored in the Drive Technology (DT) Configurator.

2) For converter operation of shaft heights 80 and 90, ordering with PTC thermistors and their connection to the converter is recommended.

3) Types derived from IM B3 (IM B6/7/8, IM V6 and IM V5), from IM B5 (IM V3 and IM V1) and from IM B14 (IM V19 and IM V18) are possible, provided that no requirements exist for condensation drainage holes (**H03**) and stamping of the type on the rating plate. The basic type IM B3, IM B5 or IM B14 is stamped as standard on the rating plate. When ordering with condensation drainage holes (**H03**), the type must be specified.

© Siemens AG 2015

Selection and ordering data (continued)

P_{rated}, 50 Hz	P_{rated}, 60 Hz [1]	Frame size	Operating values at rated output: n_{rated}, 50 Hz	T_{rated}, 50 Hz	IE class		η_{rated}, 50 Hz, 4/4	η_{rated}, 50 Hz, 3/4	η_{rated}, 50 Hz, 2/4	cos φ_{rated}, 50 Hz, 4/4	I_{rated}, 50 Hz, 400 V	T_{LR}/T_{rated}, 50 Hz	I_{LR}/I_{rated}, 50 Hz	T_B/T_{rated}, 50 Hz	L_{pfA}, 50 Hz	L_{WA}, 50 Hz	Aluminum series 1LE1003 – *IE3 version in accordance with IEC 60034-30* Article No.	$m_{IM\ B3}$	J	Torque class
kW	kW	FS	rpm	Nm	50 Hz	60 Hz	%	%	%		A				dB(A)	dB(A)	▲ New	kg	kgm^2	CL
• Cooling: self-ventilated (IC411) • Efficiency: IE3 Premium Efficiency, service factor (SF) 1.15 • Insulation: thermal class 155 (temperature class F), IP55 degree of protection, utilization in accordance with thermal class 130 (temperature class B)																				
6-pole: 1000 rpm at 50 Hz, 1200 rpm at 60 Hz [1]																				
0.37	**0.43**	**80 M**	940	3.8	–	–	74.8	74.3	70.5	0.66	1.08	2.3	4.2	2.7	42	53	**1LE1003-0DC2■-■■■■**	12	0.0025	13
0.55	**0.63**	**80 M**	935	5.6	–	–	77.2	77.2	75.5	0.67	1.53	2.5	4.5	2.8	42	53	**1LE1003-0DC3■-■■■■**	14	0.0031	13
0.75	**0.86**	**90 S**	945	7.6	IE3	IE3	78.9	80	78.5	0.7	1.96	2.2	4.6	2.6	43	55	**1LE1003-0EC0■-■■■■**	16	0.004	13
1.1	**1.27**	**90 L**	940	11	IE3	IE3	81	81	80	0.69	2.85	2.3	4.6	2.7	43	55	**1LE1003-0EC4■-■■■■**	19	0.0048	13
1.5	**1.75**	**100 L**	970	15	IE3	IE2	82.5	83.1	81.7	0.73	3.6	1.9	5.2	2.8	59	71	**1LE1003-1AC4■-■■■■**	25	0.011	13
2.2	**2.55**	**112 M**	970	22	IE3	IE2	84.3	85.1	83.8	0.75	5	2.2	5.6	2.8	65	74	**1LE1003-1BC2■-■■■■**	34	0.017	13
3	**3.45**	**132 S**	975	29	IE3	IE2	85.6	87.5	87	0.77	6.6	1.6	5.3	2.4	63	75	**1LE1003-1CC0■-■■■■**	43	0.029	13
4	**4.55**	**132 M**	975	39	IE3	IE2	86.8	88.1	87.9	0.77	8.6	1.7	5.6	2.5	63	75	**1LE1003-1CC2■-■■■■**	52	0.037	13
5.5	**6.3**	**132 M**	975	54	IE3	IE2	88	89	88.8	0.77	11.7	1.8	5.7	2.6	63	75	**1LE1003-1CC3■-■■■■**	64	0.046	13
7.5	**8.6**	**160 M**	980	73	IE3	IE2	89.1	89.9	89.3	0.76	16	1.9	4.9	2.3	67	79	**1LE1003-1DC2■-■■■■**	93	0.098	13
11	**12.6**	**160 L**	975	108	IE3	IE2	90.3	91.1	90.7	0.77	23	1.9	5	2.3	67	79	**1LE1003-1DC4■-■■■■**	115	0.12	13
15	**18**	**180 L**	975	147	IE3	IE2	91.2	91.9	91.9	0.8	29.5	2.3	5.9	2.8	55	68	▲ **1LE1003-1EC4■-■■■■**	130	0.19	16
18.5	**22**	**200 L**	978	181	IE3	IE2	91.7	92.5	92.5	0.79	37	2.5	5.6	2.6	63	76	▲ **1LE1003-2AC4■-■■■■**	166	0.28	16
22	**26.5**	**200 L**	978	215	IE3	IE2	92.2	93	92.9	0.79	43.5	2.5	5.6	2.6	63	76	▲ **1LE1003-2AC5■-■■■■**	179	0.32	16

Voltages				Motor protection	No. of poles	Frame size	Motor type	Version				Order code(s)
Frame sizes 80 M to 90 L: use of the 360° freely rotatable terminal box for 2 and 4-pole motors [2]												
50 Hz	230 VΔ/400 VY	60 Hz [1]	460 VY	PTC thermistor with 1 temp. sensor	6	80 M ... 90 L	1LE1003-0D ... -0E	**Standard**	**2**	**2**		–
50 Hz	400 VΔ/690 VY	60 Hz [1]	460 VΔ		6	80 M ... 90 L	1LE1003-0D ... -0E	**Standard**	**3**	**4**		–
50 Hz	400 VY	60 Hz [1]	460 VY	Without	6	80 M ... 90 L	1LE1003-0D ... -0E	**Standard**	**0**	**2**		–
Frame sizes 100 L to 200 L: use of the 4 x 90° rotatable terminal box												
50 Hz	230 VΔ/400 VY	60 Hz [1]	460 VY	Any	6	100 L ... 200 L	1LE1003-1A ... -2A	**Standard**	**2**	**2**		–
50 Hz	400 VΔ/690 VY	60 Hz [1]	460 VΔ	Any	6	100 L ... 200 L	1LE1003-1A ... -2A	**Standard**	**3**	**4**		–
50 Hz	500 VY			Any	6	100 L ... 200 L	1LE1003-1A ... -2A	Without add. charge	**2**	**7**		–
50 Hz	500 VΔ			Any	6	100 L ... 200 L	1LE1003-1A ... -2A	Without add. charge	**4**	**0**		–
Further voltages [1]				For price information, code numbers, order codes and descriptions, see from Page 2/57					**9**	**0**		. . .

Types of construction		No. of poles	Frame size	Motor type	Version		Order code(s)
Without flange	IM B3 [3]	6	80 M ... 200 L	1LE1003-0D ... -2A	**Standard**	**A**	–
With flange	IM B5 [3]	6	80 M ... 200 L	1LE1003-0D ... -2A	With additional charge	**F**	–
With standard flange	IM B14 [3]	6	80 M ... 160 L	1LE1003-0D ... -2A	With additional charge	**K**	–
Further types of construction	For price information, code letters and descriptions, see from Page 2/62					■	. . .

Motor protection	No. of poles	Frame size	Motor type	Version		Order code(s)
Frame sizes 100 L to 200 L: use of the 4 x 90° rotatable terminal box						
Without	6	100 L ... 200 L	1LE1003-0D ... -2A	**Standard**	**A**	–
PTC thermistor with 3 temperature sensors	6	100 L ... 200 L	1LE1003-0D ... -2A	With additional charge	**B**	–
Further motor protection	For price information, code letters and descriptions, see from Page 2/70				■	. . .

Terminal box position	No. of poles	Frame size	Motor type	Version		Order code(s)
Terminal box at top	6	80 M ... 200 L	1LE1003-0D ... -2A	**Standard**	**4**	–
Further terminal box positions	For price information, code numbers and descriptions, see from Page 2/72					

Special versions	No. of poles	Frame size	Motor type			Order code(s)
Options	For price information, order codes and descriptions, see from Page 2/74			**1LE1003- . . . . ■-■■■■**	**-Z**	. . .+. . .+. . .+. . .

[1] Operating values at rated output for 60 Hz are stored in the Drive Technology (DT) Configurator.

[2] For converter operation of shaft heights 80 and 90, ordering with PTC thermistors and their connection to the converter is recommended.

[3] Types derived from IM B3 (IM B6/7/8, IM V6 and IM V5), from IM B5 (IM V3 and IM V1) and from IM B14 (IM V19 and IM V18) are possible, provided that no requirements exist for condensation drainage holes (**H03**) and stamping of the type on the rating plate. The basic type IM B3, IM B5 or IM B14 is stamped as standard on the rating plate. When ordering with condensation drainage holes (**H03**), the type must be specified.

© Siemens AG 2015

Selection and ordering data

P_{rated}, 50 Hz	P_{rated}, 60 Hz	Frame size	Operating values at rated output: n_{rated}, 50 Hz	T_{rated}, 50 Hz	IE class		η_{rated}, 50 Hz, 4/4	η_{rated}, 50 Hz, 3/4	η_{rated}, 50 Hz, 2/4	cos φ_{rated}, 50 Hz, 4/4	I_{rated}, 50 Hz, 400 V	T_{LR}/T_{rated}, 50 Hz	I_{LR}/I_{rated}, 50 Hz	T_B/T_{rated}, 50 Hz	L_{pfA}, 50 Hz	L_{WA}, 50 Hz	**Aluminum series 1LE1003** – *IE3 version in accordance with IEC 60034-30* Article No.	$m_{IM\ B3}$	J	Torque class
kW	kW	FS	rpm	Nm	50 Hz	60 Hz	%	%	%		A				dB(A)	dB(A)	▲ New	kg	kgm²	CL
• **Cooling: self-ventilated (IC411)** • **Efficiency: IE3 Premium Efficiency, service factor (SF) 1.15** • **Insulation: thermal class 155 (temperature class F), IP55 degree of protection, utilization in accordance with thermal class 130 (temperature class B)**																				
2-pole: 3000 rpm at 50 Hz, 3600 rpm at 60 Hz [1]																				
11	**12.6**	**132 M**	2955	36	IE3	IE3	91.2	91.2	90.2	0.86	20	2.4	8.8	4	68	80	▲ **1LE1003-1CA6■-■■■■**	57	0.031	16
22	**25.3**	**160 L**	2950	71	IE3	IE3	92.7	92.7	91.2	0.91	37.5	2.8	8.7	4	70	82	▲ **1LE1003-1DA6■-■■■■**	105	0.077	16
30	**33.5**	**180 L**	2950	97	IE3	IE3	93.3	93.9	93.9	0.88	53	2.6	8.6	3.9	69	82	▲ **1LE1003-1EA6■-■■■■**	140	0.094	16
45	**51**	**200 L**	2950	146	IE3	IE3	94	94.6	94.7	0.87	79	2.5	7.1	3.2	72	85	▲ **1LE1003-2AA6■-■■■■**	194	0.16	16
4-pole: 1500 rpm at 50 Hz, 1800 rpm at 60 Hz [1]																				
18.5	**21.3**	**160 L**	1475	120	IE3	IE3	92.6	92.9	92.3	0.81	35.5	2.9	7.9	3.9	65	77	▲ **1LE1003-1DB6■-■■■■**	110	0.101	16
30	**34.5**	**180 L**	1470	195	IE3	IE2	93.6	94.3	94.2	0.79	59	2.8	7.8	3.7	60	73	▲ **1LE1003-1EB6■-■■■■**	154	0.173	16
37	**42.5**	**200 L**	1475	240	IE3	IE3	93.9	94.4	94.4	0.81	70	3.1	8.1	3.5	58	71	▲ **1LE1003-2AB6■-■■■■**	205	0.275	16
6-pole: 1000 rpm at 50 Hz, 1200 rpm at 60 Hz [1]																				
18.5	**22**	**180 L**	975	181	IE3	IE3	91.7	92.3	92.1	0.77	38	2.6	6.9	3.3	67	80	▲ **1LE1003-1EC6■-■■■■**	150	0.247	16
30	**36**	**200 L**	978	293	IE3	IE2	92.9	93.6	93.7	0.79	59	2.8	6.5	2.8	63	76	▲ **1LE1003-2AC6■-■■■■**	220	0.434	16

Voltages				Motor protection	No. of poles	Frame size	Motor type	Version				Order code(s)
Frame sizes 132 M to 200 L: use of the 4 x 90° rotatable terminal box												
50 Hz	230 VΔ/400 VY	60 Hz [1]	460 VY	Any	2, 4, 6	132 M ... 200 L	1LE1003-1C ... -2A	**Standard**	**2**	**2**		–
50 Hz	400 VΔ/690 VY	60 Hz [1]	460 VΔ	Any	2, 4, 6	132 M ... 200 L	1LE1003-1C ... -2A	**Standard**	**3**	**4**		–
50 Hz	500 VY			Any	2, 4, 6	132 M ... 200 L	1LE1003-1C ... -2A	Without add. charge	**2**	**7**		–
50 Hz	500 VΔ			Any	2, 4, 6	132 M ... 200 L	1LE1003-1C ... -2A	Without add. charge	**4**	**0**		–
Further voltages [1]			For price information, code numbers, order codes and descriptions, see from Page 2/57						**9**	**0**		. . .
Types of construction					No. of poles	Frame size	Motor type	Version				Order code(s)
Without flange		IM B3 [3]			2, 4, 6	132 M ... 200 L	1LE1003-1C ... -2A	**Standard**			**A**	–
With flange		IM B5 [3]			2, 4, 6	132 M ... 200 L	1LE1003-1C ... -2A	With additional charge			**F**	–
Further types of construction			For price information, code letters and descriptions, see from Page 2/62								■	. . .
Motor protection					No. of poles	Frame size	Motor type	Version				Order code(s)
Frame sizes 132 M to 200 L: use of the 4 x 90° rotatable terminal box												
Without					2, 4, 6	132 M ... 200 L	1LE1003-1C ... -2A	**Standard**			**A**	–
PTC thermistor with 3 temperature sensors					2, 4, 6	132 M ... 200 L	1LE1003-1C ... -2A	With additional charge			**B**	–
Further motor protection			For price information, code letters and descriptions, see from Page 2/70								■	. . .
Terminal box position					No. of poles	Frame size	Motor type	Version				Order code(s)
Terminal box at top					2, 4, 6	132 M ... 200 L	1LE1003-1C ... -2A	**Standard**				**4** –
Further terminal box positions			For price information, code numbers and descriptions, see from Page 2/72									
Special versions					No. of poles	Frame size	Motor type					Order code(s)
Options			For price information, order codes and descriptions, see from Page 2/74					**1LE1003- . . . . ■-■■■■**			**-Z**	. . .+. . .+. . .+. . .

[1] Operating values at rated output for 60 Hz are stored in the Drive Technology (DT) Configurator.

[2] For converter operation of shaft heights 80 and 90, ordering with PTC thermistors and their connection to the converter is recommended.

[3] Types derived from IM B3 (IM B6/7/8, IM V6 and IM V5), from IM B5 (IM V3 and IM V1) and from IM B14 (IM V19 and IM V18) are possible, provided that no requirements exist for condensation drainage holes (**H03**) and stamping of the type on the rating plate. The basic type IM B3, IM B5 or IM B14 is stamped as standard on the rating plate. When ordering with condensation drainage holes (**H03**), the type must be specified.

© Siemens AG 2015

Selection and ordering data

P_{rated}, 50 Hz	P_{rated}, 60 Hz	Frame size	Operating values at rated output: n_{rated}, 60 Hz	T_{rated}, 60 Hz	IE class	η_{rated}, 60 Hz, 4/4	η_{rated}, 60 Hz, 3/4	η_{rated}, 60 Hz, 2/4	cos φ_{rated}, 60 Hz, 4/4	I_{rated}, 60 Hz, 460 V	T_{LR}/T_{rated}, 60 Hz	I_{LR}/I_{rated}, 60 Hz	T_B/T_{rated}, 60 Hz	L_{pfA}, 60 Hz	L_{WA}, 60 Hz	**Aluminum series 1LE1043** – *IE3 version in accordance with IEC 60034-30* Article No.	$m_{IM\ B3}$	J	Torque class
kW	kW	FS	rpm	Nm		%	%	%		A				dB(A)	dB(A)	▲ New	kg	kgm²	CL
• Cooling: self-ventilated (IC411) or with order code F90 forced-air cooled without external fan and fan cover (IC416) • Insulation: thermal class 155 (temperature class F), IP55 degree of protection, utilization in accordance with thermal class 130 (temperature class B)																			
2-pole: 3000 rpm at 50 Hz, 3600 rpm at 60 Hz																			
0.75	**0.86**	**80 M**	3480	2.1	IE3	77	78	76	0.84	1.46	3	7.1	3.6	64	71	▲ **1LE1043-0DA2■-■■■■**	11	0.0011	16
1.5	**1.75**	**90 S**	3525	4.1	IE3	85.5	85	82.5	0.84	2.6	3.1	9.8	4.9	69	77	▲ **1LE1043-0EA0■-■■■■**	15	0.0021	16
2.2	**2.55**	**90 L**	3530	6	IE3	86.5	86.3	84.5	0.87	3.65	3	9.6	4.9	69	77	▲ **1LE1043-0EA4■-■■■■**	19	0.0031	16
4	**4.55**	**112 M**	3565	9.9	IE3	88.5	88.5	87.5	0.87	6	3.8	10	5.6	73	81	▲ **1LE1043-1BA2■-■■■■**	34	0.012	16
5.5	**6.3**	**132 S**	3555	15	IE3	89.5	89.5	88.5	0.9	8.6	2.1	8.6	4.4	72	80	▲ **1LE1043-1CA0■-■■■■**	43	0.024	16
7.5	**8.6**	**132 S**	3555	20	IE3	90.2	90.2	89.2	0.91	11.5	2.4	9.5	4.7	72	80	▲ **1LE1043-1CA1■-■■■■**	57	0.031	16
11	**12.6**	**160 M**	3560	30	IE3	91	91	90	0.88	17.2	2.8	8.5	4.3	77	82	▲ **1LE1043-1DA2■-■■■■**	75	0.053	16
15	**17.3**	**160 M**	3565	40	IE3	91	91	90	0.86	24	3.1	9.7	4.8	77	82	▲ **1LE1043-1DA3■-■■■■**	84	0.061	16
18.5	**21.3**	**160 L**	3560	50	IE3	91.7	91.7	90.7	0.9	28	3.1	9.4	4.4	77	82	▲ **1LE1043-1DA4■-■■■■**	94	0.068	16
22	**24.5**	**180 M**	3560	59	IE3	91.7	91.4	90	0.89	34.5	2.8	8.3	3.9	78	80	▲ **1LE1043-1EA2■-■■■■**	129	0.08	16
30	**33.5**	**200 L**	3560	80	IE3	92.4	92.2	91.4	0.87	46.5	2.9	7.6	3.6	78	80	▲ **1LE1043-2AA4■-■■■■**	173	0.134	16
37	**41.5**	**200 L**	3560	99	IE3	93	92.8	91.6	0.88	57	2.8	7.5	3.6	79	81	▲ **1LE1043-2AA5■-■■■■**	194	0.158	16
4-pole: 1500 rpm at 50 Hz, 1800 rpm at 60 Hz																			
1.5	**1.75**	**90 L**	1755	8.2	IE3	86.5	87	85	0.77	2.85	3	8.4	4.3	58	68	▲ **1LE1043-0EB4■-■■■■**	19	0.0049	16
2.2	**2.55**	**100 L**	1770	12	IE3	89.5	89.5	88.5	0.81	3.8	3.5	9.6	5.1	62	72	▲ **1LE1043-1AB4■-■■■■**	30	0.014	16
4	**4.55**	**112 M**	1770	20	IE3	89.5	89.5	88.5	0.8	6.5	2.9	8.2	4.3	62	70	▲ **1LE1043-1BB2■-■■■■**	34	0.017	16
5.5	**6.3**	**132 S**	1780	30	IE3	91.7	91.7	90.7	0.83	9.1	2.9	9.5	4.4	68	76	▲ **1LE1043-1CB0■-■■■■**	64	0.046	16
7.5	**8.6**	**132 M**	1770	40	IE3	91.7	91.7	90.7	0.83	12.4	2.7	9.6	4.2	68	76	▲ **1LE1043-1CB2■-■■■■**	64	0.046	16
11	**12.6**	**160 M**	1775	59	IE3	92.4	92.4	91.4	0.83	18	3	8.9	3.8	69	77	▲ **1LE1043-1DB2■-■■■■**	83	0.083	16
15	**17.3**	**160 L**	1780	80	IE3	93	93	91.5	0.81	25	2.9	9.5	4.3	69	77	▲ **1LE1043-1DB4■-■■■■**	100	0.099	16
18.5	**21.3**	**180 M**	1775	100	IE3	93.6	93.7	93.1	0.81	31	2.7	7.8	3.6	68	73	▲ **1LE1043-1EB2■-■■■■**	134	0.13	16
22	**25.3**	**180 L**	1775	118	IE3	93.6	93.8	93.3	0.81	37	2.8	7.7	3.7	70	75	▲ **1LE1043-1EB4■-■■■■**	142	0.14	16
30	**34.5**	**200 L**	1778	161	IE3	94.1	94.3	93.8	0.83	48	3	8.1	3.5	67	72	▲ **1LE1043-2AB5■-■■■■**	189	0.22	16
6-pole: 1000 rpm at 50 Hz, 1200 rpm at 60 Hz																			
4	**4.55**	**132 M**	1180	30	IE3	89.5	89.5	88.4	0.73	7.1	2.4	7.6	3.4	67	75	▲ **1LE1043-1CC2■-■■■■**	52	0.037	13
5.5	**6.3**	**132 M**	1180	45	IE3	91	91.3	90.5	0.74	10.3	2.3	7.2	3.3	67	75	▲ **1LE1043-1CC3■-■■■■**	52	0.037	13
7.5	**8.6**	**160 M**	1185	60	IE3	91	91	89.8	0.75	13.8	2.4	5.9	2.6	70	79	▲ **1LE1043-1DC2■-■■■■**	93	0.098	13
11	**12.6**	**160 L**	1180	89	IE3	91.7	91.9	91	0.75	20	2.3	5.8	2.6	70	79	▲ **1LE1043-1DC4■-■■■■**	115	0.12	13
15	**17.3**	**180 L**	1178	122	IE3	91.7	92	91.5	0.79	26	2.5	6.8	3	58	71	▲ **1LE1043-1EC4■-■■■■**	130	0.19	16
18.5	**22**	**200 L**	1180	150	IE3	93	93.2	92.6	0.78	32.5	2.8	6.5	3	67	80	▲ **1LE1043-2AC4■-■■■■**	166	0.28	16
22	**26.5**	**200 L**	1180	178	IE3	93	93.6	93.5	0.79	38	2.6	6.3	2.8	67	80	▲ **1LE1043-2AC5■-■■■■**	179	0.32	16

Voltages (≤ 600 V) [1]				No. of poles	Frame size	Motor type	Version			Order code(s)
50 Hz	230 VΔ/400 VY	60 Hz	460 VY	2, 4, 6	80 M ... 200 L	1LE1043-0D ... -2A	**Standard**	**2**	**2**	–
50 Hz	400 VΔ	60 Hz	460 VΔ	2, 4, 6	80 M ... 200 L	1LE1043-0D ... -2A	**Standard**	**3**	**4**	–
50 Hz	500 VY			2, 4, 6	80 M ... 200 L	1LE1043-0D ... -2A	Without add. charge	**2**	**7**	–
50 Hz	500 VΔ			2, 4, 6	80 M ... 200 L	1LE1043-0D ... -2A	Without add. charge	**4**	**0**	–
Further voltages			For price information, code numbers, order codes and descriptions, see from Page 2/57					**9**	**0**	. . .

Types of construction		No. of poles	Frame size	Motor type	Version		Order code(s)
Without flange	IM B3 [2]	2, 4, 6	80 M ... 200 L	1LE1043-0D ... -2A	**Standard**	**A**	–
With flange	IM B5 [2]	2, 4, 6	80 M ... 200 L	1LE1043-0D ... -2A	With additional charge	**F**	–
With standard flange	IM B14 [2]	2, 4, 6	80 M ... 160 L	1LE1043-0D ... -2A	With additional charge	**K**	–
Further types of construction	For price information, code letters and descriptions, see from Page 2/62					■	. . .

Motor protection	No. of poles	Frame size	Motor type	Version		Order code(s)
Without	2, 4, 6	80 M ... 200 L	1LE1043-0D ... -2A	**Standard**	**A**	–
PTC thermistor with 3 temperature sensors	2, 4, 6	80 M ... 200 L	1LE1043-0D ... -2A	With additional charge	**B**	–
Further motor protection	For price information, code letters and descriptions, see from Page 2/70				■	. . .

Terminal box position	No. of poles	Frame size	Motor type	Version		Order code(s)
Terminal box at top	2, 4, 6	80 M ... 200 L	1LE1043-0D ... -2A	**Standard**	**4**	–
Further terminal box positions	For price information, code numbers and descriptions, see from Page 2/72					

Special versions	No. of poles	Frame size	Motor type			Order code(s)
Forced-air cooled motors without ext. fan/fan cover (IC416)	2, 4, 6	80 M ... 200 L	1LE1043-0D ... -2A	**1LE1043-. . . . ■–■■■■**	**-Z**	**F90** +. . .+. . .+. . .
Options	For price information, order codes and descriptions, see from Page 2/74			**1LE1043-. . . . ■–■■■■**	**-Z**	. . .+. . .+. . .+. . .

[1] Operating voltages only ≤ 600 V admissible in accordance with MG1 Table 12-12.

[2] Types derived from IM B3 (IM B6/7/8, IM V6 and IM V5), from IM B5 (IM V3 and IM V1) and from IM B14 (IM V19 and IM V18) are possible, provided that no requirements exist for condensation drainage holes (**H03**) and stamping of the type on the rating plate. The basic type IM B3, IM B5 or IM B14 is stamped as standard on the rating plate. When ordering with condensation drainage holes (**H03**), the type must be specified.

© Siemens AG 2015

Selection and ordering data

P_{rated}, 50 Hz	P_{rated}, 60 Hz	Frame size	Operating values at rated output: n_{rated}, 60 Hz	T_{rated}, 60 Hz	IE class	η_{rated}, 60 Hz, 4/4	η_{rated}, 60 Hz, 3/4	η_{rated}, 60 Hz, 2/4	cos φ_{rated}, 60 Hz, 4/4	I_{rated}, 60 Hz, 460 V	T_{LR}/T_{rated}, 60 Hz	I_{LR}/I_{rated}, 60 Hz	T_B/T_{rated}, 60 Hz	L_{pfA}, 60 Hz	L_{WA}, 60 Hz	**Aluminum series 1LE1043** – *IE3 version in accordance with IEC 60034-30* Article No.	$m_{IM\ B3}$	J	Torque class
kW	kW	FS	rpm	Nm		%	%	%		A				dB(A)	dB(A)	▲ New	kg	kgm²	CL
• Cooling: self-ventilated (IC411) or with order code F90 forced-air cooled without external fan and fan cover (IC416) • Insulation: thermal class 155 (temperature class F), IP55 degree of protection, utilization in accordance with thermal class 130 (temperature class B)																			
2-pole: 3000 rpm at 50 Hz, 3600 rpm at 60 Hz																			
11	**12.6**	**132 M**	3565	29	IE3	91	91	90	0.86	17.6	2.9	9.4	5	72	80	▲ **1LE1043-1CA6■-■■■■**	57	0.031	16
22	**25.3**	**160 L**	3560	59	IE3	91.7	91.7	90.7	0.9	33.5	3.6	9.6	4.4	77	82	▲ **1LE1043-1DA6■-■■■■**	105	0.076	16

Voltages (≤ 600 V) [1]				No. of poles	Frame size	Motor type	Version			Order code(s)
50 Hz	230 VΔ/400 VY	60 Hz	460 VY	2	132 M ... 160 L	1LE1043-1C ... -1D	**Standard**	**2**	**2**	–
50 Hz	400 VΔ	60 Hz	460 VΔ	2	132 M ... 160 L	1LE1043-1C ... -1D	**Standard**	**3**	**4**	–
50 Hz	500 VY			2	132 M ... 160 L	1LE1043-1C ... -1D	Without add. charge	**2**	**7**	–
50 Hz	500 VΔ			2	132 M ... 160 L	1LE1043-1C ... -1D	Without add. charge	**4**	**0**	–
Further voltages			For price information, code numbers, order codes and descriptions, see from Page 2/57					**9**	**0**	. . .

Types of construction			No. of poles	Frame size	Motor type	Version		Order code(s)
Without flange		IM B3 [2]	2	132 M ... 160 L	1LE1043-1C ... -1D	**Standard**	**A**	–
With flange		IM B5 [2]	2	132 M ... 160 L	1LE1043-1C ... -1D	With additional charge	**F**	–
With standard flange		IM B14 [2]	2	132 M ... 160 L	1LE1043-1C ... -1D	With additional charge	**K**	–
Further types of construction			For price information, code letters and descriptions, see from Page 2/62				**■**	. . .

Motor protection	No. of poles	Frame size	Motor type	Version		Order code(s)
Without	2	132 M ... 160 L	1LE1043-1C ... -1D	**Standard**	**A**	–
PTC thermistor with 3 temperature sensors	2	132 M ... 160 L	1LE1043-1C ... -1D	With additional charge	**B**	–
Further motor protection	For price information, code letters and descriptions, see from Page 2/70				**■**	. . .

Terminal box position	No. of poles	Frame size	Motor type	Version		Order code(s)
Terminal box at top	2	132 M ... 160 L	1LE1043-1C ... -1D	**Standard**	**4**	–
Further terminal box positions	For price information, code numbers and descriptions, see from Page 2/72					

Special versions	No. of poles	Frame size	Motor type			Order code(s)
Forced-air cooled motors without ext. fan/fan cover (IC416)	2	132 M ... 160 L	1LE1043-1C ... -1D	**1LE1043-. . . . ■–■■■■**	**-Z**	**F90** +. . .+. . .+. . .
Options	For price information, order codes and descriptions, see from Page 2/74			**1LE1043-. . . . ■–■■■■**	**-Z**	. . .+. . .+. . .+. . .

[1] Operating voltages only ≤ 600 V admissible in accordance with MG1 Table 12-12.

[2] Types derived from IM B3 (IM B6/7/8, IM V6 and IM V5), from IM B5 (IM V3 and IM V1) and from IM B14 (IM V19 and IM V18) are possible, provided that no requirements exist for condensation drainage holes (**H03**) and stamping of the type on the rating plate. The basic type IM B3, IM B5 or IM B14 is stamped as standard on the rating plate. When ordering with condensation drainage holes (**H03**), the type must be specified.

© Siemens AG 2015

Selection and ordering data

Cast-iron series
1LE1503 – *Basic Line*
1LE1603 – *Performance Line*
IE3 version in accordance with IEC 60034-30
Article No.

P_{rated}, 50 Hz	P_{rated}, 60 Hz [1]	Frame size	Operating values at rated output: n_{rated}, 50 Hz	T_{rated}, 50 Hz	IE class		η_{rated}, 50 Hz, 4/4	η_{rated}, 50 Hz, 3/4	η_{rated}, 50 Hz, 2/4	cos φ_{rated}, 50 Hz, 4/4	I_{rated}, 50 Hz, 400 V	T_{LR}/T_{rated}, 50 Hz	I_{LR}/I_{rated}, 50 Hz	T_B/T_{rated}, 50 Hz	L_{pfA}, 50 Hz	L_{WA}, 50 Hz	Article No.	$m_{IM\ B3}$	J	Torque class
kW	kW	FS	rpm	Nm	50 Hz	60 Hz	%	%	%		A				dB(A)	dB(A)		kg	kgm^2	CL
• Cooling: self-ventilated (IC411) or with order code F90 forced-air cooled without external fan and fan cover (IC416)																				
• Efficiency: IE3 Premium Efficiency, service factor (SF) 1.15																				
• Insulation: thermal class 155 (temperature class F), IP55 degree of protection, utilization in accordance with thermal class 130 (temperature class B)																				
2-pole: 3000 rpm at 50 Hz, 3600 rpm at 60 Hz [1]																				
0.37	**0.43**	**71 M**	2850	1.2	–	–	73.8	73.2	69.6	0.76	0.95	3.5	5.8	3.5	52	63	**1LE1 5 03-0CA2 ■-■■■■**	13	0.00045	16
0.55	**0.63**	**71 M**	2850	1.8	–	–	77.8	77.6	74.7	0.76	1.34	3.7	6.1	3.7	52	63	**1LE1 5 03-0CA3 ■-■■■■**	14.5	0.00056	16
0.75	**0.86**	**80 M**	2850	2.5	IE3	IE3	80.7	82	81.5	0.86	1.56	2.6	6.2	3	60	71	**1LE1 5 03-0DA2 ■-■■■■**	18	0.0011	16
1.1	**1.27**	**80 M**	2885	3.6	IE3	IE3	82.7	82.7	81.7	0.85	2.25	2.8	7.4	3.8	60	71	**1LE1 5 03-0DA3 ■-■■■■**	21	0.0013	16
1.5	**1.75**	**90 S**	2910	4.9	IE3	IE3	84.2	84.5	83.5	0.86	3	2.7	8.1	4.2	65	77	**1LE1 5 03-0EA0 ■-■■■■**	25.5	0.0021	16
2.2	**2.55**	**90 L**	2910	7.2	IE3	IE3	85.9	86.8	86.1	0.88	4.2	2.6	8.3	4	65	77	**1LE1 5 03-0EA4 ■-■■■■**	32	0.0031	16
3	**3.45**	**100 L**	2920	9.8	IE3	IE2	87.1	87.1	86.1	0.88	5.6	2.8	8	4.3	67	79	**1LE1 ■ 03-1AA4 ■-■■■■**	36	0.0054	16
4	**4.55**	**112 M**	2945	13	IE3	IE2	88.1	89.1	88.7	0.9	7.3	1.8	8.2	3.5	69	81	**1LE1 ■ 03-1BA2 ■-■■■■**	45	0.012	16
5.5	**6.3**	**132 S**	2950	17.8	IE3	IE3	89.2	89.2	88.2	0.9	9.9	1.8	7.4	3.6	68	80	**1LE1 ■ 03-1CA0 ■-■■■■**	58	0.024	16
7.5	**8.6**	**132 S**	2950	24.3	IE3	IE3	90.1	90.1	89.1	0.92	13.1	1.9	8.3	3.9	68	80	**1LE1 ■ 03-1CA1 ■-■■■■**	73	0.031	16
11	**12.6**	**160 M**	2955	35.5	IE3	IE3	91.2	91.2	90.2	0.89	19.6	2.4	7.9	3.8	70	82	**1LE1 ■ 03-1DA2 ■-■■■■**	100	0.053	16
15	**17.3**	**160 M**	2960	48.4	IE3	IE3	91.9	91.9	90.9	0.87	27	2.7	8.7	4.3	70	82	**1LE1 ■ 03-1DA3 ■-■■■■**	110	0.061	16
18.5	**21.3**	**160 L**	2955	60	IE3	IE3	92.4	92.4	91.4	0.9	32	2.8	9	4.2	70	82	**1LE1 ■ 03-1DA4 ■-■■■■**	127	0.068	16
22	**24.5**	**180 M**	2950	71	IE3	IE3	92.7	93	92.4	0.89	38.5	2.3	7.5	3.5	73	80	**1LE1 ■ 03-1EA2 ■-■■■■**	160	0.08	16
30	**33.5**	**200 L**	2955	97	IE3	IE3	93.3	93.7	93.3	0.87	53	2.5	7	3.3	73	80	**1LE1 ■ 03-2AA4 ■-■■■■**	225	0.134	16
37	**41.5**	**200 L**	2955	120	IE3	IE3	93.7	94.1	93.8	0.88	65	2.5	7.1	3.2	74	81	**1LE1 ■ 03-2AA5 ■-■■■■**	250	0.158	16
45	**51**	**225 M**	2960	145	IE3	IE3	94	94.5	94.4	0.89	78	2.4	6.9	3.3	73	87	**1LE1 ■ 03-2BA2 ■-■■■■**	315	0.26	16
55	**62**	**250 M**	2975	177	IE3	IE3	94.3	94.5	93.9	0.89	95	2.3	6.7	3.1	73	87	**1LE1 ■ 03-2CA2 ■-■■■■**	385	0.46	13
75	**84**	**280 S**	2975	241	IE3	IE2	94.7	94.8	94.1	0.89	128	2.4	6.8	3	74	88	**1LE1 ■ 03-2DA0 ■-■■■■**	510	0.77	13
90	**101**	**280 M**	2975	289	IE3	IE2	95	95.1	94.6	0.9	152	2.4	7.2	3.1	74	88	**1LE1 ■ 03-2DA2 ■-■■■■**	590	0.94	13
110	**123**	**315 S**	2982	352	IE3	IE3	95.2	95.4	94.9	0.91	183	2.4	7.1	3.1	75	89	**1LE1 ■ 03-3AA0 ■-■■■■**	750	1.39	13
132	**148**	**315 M**	2982	423	IE3	IE3	95.4	95.5	95.2	0.91	220	2.5	7.2	3.1	75	89	**1LE1 ■ 03-3AA2 ■-■■■■**	880	1.6	13
160	**180**	**315 L**	2982	512	IE3	IE2	95.6	95.7	95.2	0.92	265	2.8	7.8	3.3	77	91	**1LE1 ■ 03-3AA4 ■-■■■■**	980	1.9	13
200	**224**	**315 L**	2982	640	IE3	IE3	95.8	95.9	95.5	0.92	330	2.5	7.2	3	77	91	**1LE1 ■ 03-3AA5 ■-■■■■**	1150	2.3	13

	Relubrication	Motor protection	Fan cover	Bearing size	Liability for defects	
Basic Line	Optional (standard from FS 280 upwards)	Optional	Plastic	62 (63 from FS 280 upwards)	12 months	5
Performance Line	Standard from FS 160 (optional for FS 100 to 132)	Standard PTC	Steel	63	36 months	6

Voltages [2]				No. of poles	Frame size	Motor type	Version				Order code(s)
50 Hz	230 VΔ/400 VY	60 Hz [1]	460 VY	2	71 M ... 315 L	1LE1■03-0C … -3A	**Standard**	2	2		–
50 Hz	400 VΔ/690 VY	60 Hz [1]	460 VΔ	2	71 M ... 315 L	1LE1■03-0C … -3A	**Standard**	3	4		–
50 Hz	500 VY			2	71 M ... 315 L	1LE1■03-0C … -3A	Without add. chrg.	2	7		–
50 Hz	500 VΔ			2	100 L ... 315 L	1LE1■03-1A … -3A	Without add. chrg.	4	0		–
Further voltages [1]		For price information, code numbers, order codes and descriptions, see from Page 2/60						9	0		. . .

Types of construction			No. of poles	Frame size	Motor type	Version			Order code(s)
Without flange	IM B3 [3]		2	71 M ... 315 L	1LE1■03-0C … -3A	**Standard**	A		–
With flange	IM B5 [3]		2	71 M ... 315 M	1LE1■03-0C … -3A	With additional charge	F		–
Further types of construction		For price information, code letters and descriptions, see from Page 2/66					■		. . .

Motor protection	Line	No. of poles	Frame size	Motor type	Version			Order code(s)
Without	Only possible for **Basic Line**	2	71 M ... 315 L	1LE1503-0C … -3A	**Standard**	A		–
PTC thermistor with 3 temperature sensors	**Basic Line**	2	71 M ... 315 L	1LE1503-0C … -3A	With additional charge	B		–
	Performance Line	2	100 L ... 315 L	1LE1603-1A … -3A	**Standard**	B		–
Further motor protection	For price information, code letters and descriptions, see from Page 2/71					■		. . .

Terminal box position	No. of poles	Frame size	Motor type	Version			Order code(s)
Terminal box at top	2	71 M ... 315 L	1LE1■03-0C … -3A	**Standard**	4		–
Further terminal box positions	For price information, code numbers and descriptions, see from Page 2/73						

Special versions	No. of poles	Frame size	Motor type				Order code(s)
Forced-air cooled motors without ext. fan/fan cover (IC 416)	2	71 M ... 315 L	1LE1■03-0C … -3A	**1LE1■03-. . . .**	■-■■■■	-Z	**F90+. . .+. . .+. . .**
Options	For price information, order codes and descriptions, see from Page 2/80			**1LE1■03-. . . .**	■-■■■■	-Z	**. . .+. . .+. . .+. . .**

[1] Operating values at rated output for 60 Hz are stored in the Drive Technology (DT) Configurator.

[2] Parallel supply lines are required in the case of connection to ≤ 240 V. For frame size 315 with connection to ≤ 240 V, due to the high current, a drilled, removable entry plate (Order code **R52**) or a larger terminal box (Order code **R50**) can be used. Order codes **R52** and **R50** alter the motor dimensions.

[3] Types derived from IM B3 (IM B6/7/8, IM V6 and IM V5), from IM B5 (IM V3 and IM V1) and from IM B14 (IM V19 and IM V18) are possible, provided that no requirement exists for stamping of the type on the rating plate. The basic type IM B3, IM B5 or IM B14 is stamped as standard on the rating plate. If mounted in a different position, the position must be specified to ensure that the condensation drainage holes are positioned correctly.

© Siemens AG 2015

Selection and ordering data (continued)

P_{rated}, 50 Hz	P_{rated}, 60 Hz [1]	Frame size	Operating values at rated output: n_{rated}, 50 Hz	T_{rated}, 50 Hz	IE class		η_{rated}, 50 Hz, 4/4	η_{rated}, 50 Hz, 3/4	η_{rated}, 50 Hz, 2/4	cos φ_{rated}, 50 Hz, 4/4	I_{rated}, 50 Hz, 400 V	T_{LR}/T_{rated}, 50 Hz	I_{LR}/I_{rated}, 50 Hz	T_B/T_{rated}, 50 Hz	L_{pfA}, 50 Hz	L_{WA}, 50 Hz	Cast-iron series: **1LE1503** – *Basic Line*; **1LE1603** – *Performance Line*; *IE3 version in accordance with IEC 60034-30*; Article No.	$m_{IM\ B3}$	J	Torque class
kW	kW	FS	rpm	Nm	50 Hz	60 Hz	%	%	%		A				dB(A)	dB(A)		kg	kgm^2	CL
• Cooling: self-ventilated (IC411) or with order code F90 forced-air cooled without external fan and fan cover (IC416) • Efficiency: IE3 Premium Efficiency, service factor (SF) 1.15 • Insulation: thermal class 155 (temperature class F), IP55 degree of protection, utilization in accordance with thermal class 130 (temperature class B)																				
4-pole: 1500 rpm at 50 Hz, 1800 rpm at 60 Hz [1]																				
0.25	**0.29**	**71 M**	1395	1.7	–	–	73.5	73.6	70.3	0.72	0.68	2.5	4.2	2.6	44	55	**1LE1 5 03-0CB2 ■-■■■■**	13	0.00095	16
0.37	**0.43**	**71 M**	1410	2.5	–	–	77.3	76.9	73.6	0.7	0.99	3.1	4.8	3.1	44	55	**1LE1 5 03-0CB3 ■-■■■■**	16	0.0014	16
0.55	**0.63**	**80 M**	1440	3.6	–	–	81.3	82	80.2	0.78	1.25	2.1	5.9	3.1	53	64	**1LE1 5 03-0DB2 ■-■■■■**	18.5	0.0021	16
0.75	**0.86**	**80 M**	1450	4.9	IE3	IE2	82.5	82.5	81.5	0.75	1.75	2.7	7.1	3.9	53	64	**1LE1 5 03-0DB3 ■-■■■■**	22.5	0.0029	16
1.1	**1.27**	**90 S**	1440	7.3	IE3	IE2	84.1	84.1	83.1	0.78	2.4	2.9	6.9	3.6	56	68	**1LE1 5 03-0EB0 ■-■■■■**	25	0.0036	16
1.5	**1.75**	**90 L**	1445	9.9	IE3	IE3	85.3	85.9	84.9	0.8	3.15	2.6	7.2	2.7	56	68	**1LE1 5 03-0EB4 ■-■■■■**	31	0.0049	16
2.2	**2.55**	**100 L**	1465	14.3	IE3	IE3	86.7	86.7	85.7	0.83	4.4	2.1	7.6	3.6	60	72	**1LE1 ■ 03-1AB4 ■-■■■■**	40	0.014	16
3	**3.45**	**100 L**	1460	19.6	IE3	IE3	87.7	87.7	86.7	0.83	5.9	2.3	7.3	3.7	60	72	**1LE1 ■ 03-1AB5 ■-■■■■**	40	0.014	16
4	**4.55**	**112 M**	1460	26	IE3	IE3	88.6	88.6	87.6	0.82	7.9	2.4	7.1	3.7	58	70	**1LE1 ■ 03-1BB2 ■-■■■■**	46	0.017	16
5.5	**6.3**	**132 S**	1470	35.7	IE3	IE2	89.6	89.6	88.6	0.84	10.5	2.1	7.2	3.4	64	76	**1LE1 ■ 03-1CB0 ■-■■■■**	74	0.046	16
7.5	**8.6**	**132 M**	1470	48.7	IE3	IE2	90.4	90.4	89.4	0.84	14.3	2.4	7.4	3.5	64	76	**1LE1 ■ 03-1CB2 ■-■■■■**	80	0.046	16
11	**12.6**	**160 M**	1475	71	IE3	IE3	91.4	91.4	90.4	0.84	20.5	2.2	6.9	3.2	65	77	**1LE1 ■ 03-1DB2 ■-■■■■**	109	0.083	16
15	**17.3**	**160 L**	1475	97	IE3	IE3	92.1	92.1	91.1	0.82	28.5	2.5	8.5	3.8	65	77	**1LE1 ■ 03-1DB4 ■-■■■■**	127	0.099	16
18.5	**21.3**	**180 M**	1470	120	IE3	IE3	92.6	93.2	93.2	0.82	35	2.5	7.2	3.3	66	73	**1LE1 ■ 03-1EB2 ■-■■■■**	165	0.13	16
22	**25.3**	**180 L**	1470	143	IE3	IE3	93	93.7	93.7	0.83	41	2.3	6.8	3.3	68	75	**1LE1 ■ 03-1EB4 ■-■■■■**	170	0.14	16
30	**34.5**	**200 L**	1470	195	IE3	IE2	93.6	94.3	94.4	0.84	55	2.6	7.3	3.1	65	72	**1LE1 ■ 03-2AB5 ■-■■■■**	240	0.22	16
37	**42.5**	**225 S**	1478	239	IE3	IE2	93.9	94.5	94.4	0.86	66	2.5	6.4	2.7	65	78	**1LE1 ■ 03-2BB0 ■-■■■■**	285	0.42	16
45	**52**	**225 M**	1478	291	IE3	IE2	94.2	94.9	95.1	0.86	80	2.6	6.4	2.7	65	78	**1LE1 ■ 03-2BB2 ■-■■■■**	320	0.47	16
55	**63**	**250 M**	1482	354	IE3	IE2	94.6	95.1	95	0.87	96	2.5	6.8	2.9	66	79	**1LE1 ■ 03-2CB2 ■-■■■■**	420	0.85	16
75	**86**	**280 S**	1485	482	IE3	IE2	95	95.3	95	0.86	133	2.5	6.9	3	69	83	**1LE1 ■ 03-2DB0 ■-■■■■**	570	1.39	16
90	**104**	**280 M**	1485	579	IE3	IE2	95.2	95.5	95.3	0.87	157	2.6	7.2	3	70	84	**1LE1 ■ 03-2DB2 ■-■■■■**	670	1.7	16
110	**127**	**315 S**	1488	706	IE3	IE3	95.4	95.8	95.5	0.87	191	2.6	6.8	2.9	70	84	**1LE1 ■ 03-3AB0 ■-■■■■**	760	2.2	16
132	**152**	**315 M**	1490	846	IE3	IE3	95.6	95.9	95.9	0.87	230	2.8	7.3	3	73	87	**1LE1 ■ 03-3AB2 ■-■■■■**	960	2.9	16
160	**184**	**315 L**	1490	1025	IE3	IE3	95.8	96.1	96.1	0.87	275	2.9	7.3	3.1	73	87	**1LE1 ■ 03-3AB4 ■-■■■■**	990	3.1	16
200	**230**	**315 L**	1488	1284	IE3	IE2	96	96.3	96.1	0.88	340	3.2	7.4	3	73	87	**1LE1 ■ 03-3AB5 ■-■■■■**	1190	3.7	16

	Relubrication	Motor protection	Fan cover	Bearing size	Liability for defects						
Basic Line	Optional (standard from FS 280 upwards)	Optional	Plastic	62 (63 from FS 280 upwards)	12 months	**5**					
Performance Line	Standard from FS 160 (optional for FS 100 to 132)	Standard PTC	Steel	63	36 months	**6**					

Voltages [2]			No. of poles	Frame size	Motor type	Version					Order code(s)
50 Hz	230 VΔ/400 VY	60 Hz [1] 460 VY	4	71 M ... 315 L	1LE1■03-0C … -3A	**Standard**	**2**	**2**			–
50 Hz	400 VΔ/690 VY	60 Hz [1] 460 VΔ	4	71 M ... 315 L	1LE1■03-0C … -3A	**Standard**	**3**	**4**			–
50 Hz	500 VY		4	71 M ... 315 L	1LE1■03-0C … -3A	Without add. chrg.	**2**	**7**			–
50 Hz	500 VΔ		4	100 L ... 315 L	1LE1■03-1A … -3A	Without add. chrg.	**4**	**0**			–
Further voltages [1]		For price information, code numbers, order codes and descriptions, see from Page 2/60					**9**	**0**			. . .

Types of construction		No. of poles	Frame size	Motor type	Version				Order code(s)
Without flange	IM B3 [3]	4	71 M ... 315 L	1LE1■03-0C … -3A	**Standard**			**A**	–
With flange	IM B5 [3]	4	71 M ... 315 M	1LE1■03-0C … -3A	With additional charge			**F**	–
Further types of construction	For price information, code letters and descriptions, see from Page 2/66							■	. . .

Motor protection	Line	No. of poles	Frame size	Motor type	Version				Order code(s)
Without	Only possible for **Basic Line**	4	71 M ... 315 L	1LE1503-0C … -3A	**Standard**			**A**	–
PTC thermistor with 3 temperature sensors	**Basic Line**	4	71 M ... 315 L	1LE1503-0C … -3A	With additional charge			**B**	–
	Performance Line	4	100 L ... 315 L	1LE1603-1A … -3A	**Standard**			**B**	–
Further motor protection	For price information, code letters and descriptions, see from Page 2/71							■	. . .

Terminal box position	No. of poles	Frame size	Motor type	Version				Order code(s)
Terminal box at top	4	71 M ... 315 L	1LE1■03-0C … -3A	**Standard**			**4**	–
Further terminal box positions	For price information, code numbers and descriptions, see from Page 2/73							

Special versions	No. of poles	Frame size	Motor type					Order code(s)
Forced-air cooled motors without ext. fan/fan cover (IC 416)	4	71 M ... 315 L	1LE1■03-0C … -3A	**1LE1■03-. . . .**	■-■■■■	-Z		**F90+. . .+. . .+. . .**
Options	For price information, order codes and descriptions, see from Page 2/80			**1LE1■03-. . . .**	■-■■■■	-Z		**. . .+. . .+. . .+. . .**

[1] Operating values at rated output for 60 Hz are stored in the Drive Technology (DT) Configurator.

[2] Parallel supply lines are required in the case of connection to ≤ 240 V. For frame size 315 with connection to ≤ 240 V, due to the high current, a drilled, removable entry plate (Order code **R52**) or a larger terminal box (Order code **R50**) can be used. Order codes **R52** and **R50** alter the motor dimensions.

[3] Types derived from IM B3 (IM B6/7/8, IM V6 and IM V5), from IM B5 (IM V3 and IM V1) and from IM B14 (IM V19 and IM V18) are possible, provided that no requirement exists for stamping of the type on the rating plate. The basic type IM B3, IM B5 or IM B14 is stamped as standard on the rating plate. If mounted in a different position, the position must be specified to ensure that the condensation drainage holes are positioned correctly.

© Siemens AG 2015

Selection and ordering data (continued)

P_{rated}, 50 Hz	P_{rated}, 60 Hz [1]	Frame size	Operating values at rated output: n_{rated}, 50 Hz	T_{rated}, 50 Hz	IE class		η_{rated}, 50 Hz, 4/4	η_{rated}, 50 Hz, 3/4	η_{rated}, 50 Hz, 2/4	cos φ_{rated}, 50 Hz, 4/4	I_{rated}, 50 Hz, 400 V	T_{LR}/T_{rated}, 50 Hz	I_{LR}/I_{rated}, 50 Hz	T_B/T_{rated}, 50 Hz	L_{pfA}, 50 Hz	L_{WA}, 50 Hz	Cast-iron series 1LE1503 – *Basic Line* 1LE1603 – *Performance Line* *IE3 version in accordance with IEC 60034-30* Article No.	$m_{IM\ B3}$	J	Torque class
kW	kW	FS	rpm	Nm	50 Hz	60 Hz	%	%	%		A				dB(A)	dB(A)		kg	kgm^2	CL
• Cooling: self-ventilated (IC411) or with order code F90 forced-air cooled without external fan and fan cover (IC416)																				
• Efficiency: IE3 Premium Efficiency, service factor (SF) 1.15																				
• Insulation: thermal class 155 (temperature class F), IP55 degree of protection, utilization in accordance with thermal class 130 (temperature class B)																				
6-pole: 1000 rpm at 50 Hz, 1200 rpm at 60 Hz [1]																				
0.18	**0.21**	**71 M**	885	1.9	–	–	63.9	64.6	60.8	0.69	0.59	2.3	2.8	2.3	39	50	**1LE1 5 03-0CC2 ■-■■■■**	12.5	0.001	16
0.25	**0.29**	**71 M**	885	2.7	–	–	68.6	69.5	67.1	0.69	0.76	2.6	3.2	2.6	39	50	**1LE1 5 03-0CC3 ■-■■■■**	15.5	0.0015	16
0.37	**0.43**	**80 M**	940	3.8	–	–	74.8	74.3	70.5	0.66	1.08	2.3	4.2	2.7	42	53	**1LE1 5 03-0DC2 ■-■■■■**	18.5	0.0025	13
0.55	**0.63**	**80 M**	935	5.6	–	–	77.2	77.2	75.5	0.67	1.53	2.5	4.5	2.8	42	53	**1LE1 5 03-0DC3 ■-■■■■**	22.5	0.0031	13
0.75	**0.86**	**90 S**	945	7.6	IE3	IE3	78.9	80	78.5	0.7	1.96	2.2	4.6	2.6	43	55	**1LE1 5 03-0EC0 ■-■■■■**	26.5	0.004	13
1.1	**1.27**	**90 L**	940	11	IE3	–	81	81	80	0.69	2.85	2.3	4.6	2.7	43	55	**1LE1 5 03-0EC4 ■-■■■■**	32	0.0048	13
1.5	**1.75**	**100 L**	970	15	IE3	IE2	82.5	83.1	81.7	0.73	3.6	1.9	5.2	2.8	59	71	**1LE1 ■ 03-1AC4 ■-■■■■**	36	0.011	13
2.2	**2.55**	**112 M**	970	22	IE3	IE2	84.3	85.1	83.8	0.75	5	2.2	5.6	2.8	65	74	**1LE1 ■ 03-1BC2 ■-■■■■**	53	0.017	13
3	**3.45**	**132 S**	975	29	IE3	IE2	85.6	87.5	87	0.77	6.6	1.6	5.3	2.4	63	75	**1LE1 ■ 03-1CC0 ■-■■■■**	61	0.029	13
4	**4.55**	**132 M**	975	39	IE3	IE2	86.8	88.1	87.9	0.77	8.6	1.7	5.6	2.5	63	75	**1LE1 ■ 03-1CC2 ■-■■■■**	70	0.037	13
5.5	**6.3**	**132 M**	975	54	IE3	IE2	88	89	88.8	0.77	11.7	1.8	5.7	2.6	63	75	**1LE1 ■ 03-1CC3 ■-■■■■**	83	0.046	13
7.5	**8.6**	**160 M**	980	73	IE3	IE2	89.1	89.9	89.3	0.76	16	1.9	4.9	2.3	67	79	**1LE1 ■ 03-1DC2 ■-■■■■**	122	0.098	13
11	**12.6**	**160 L**	975	108	IE3	IE2	90.3	91.1	90.7	0.77	23	1.9	5	2.3	67	79	**1LE1 ■ 03-1DC4 ■-■■■■**	147	0.12	13
15	**18**	**180 L**	975	147	IE3	IE2	91.2	91.9	91.9	0.8	29.5	2.3	5.9	2.8	55	68	**1LE1 ■ 03-1EC4 ■-■■■■**	180	0.19	16
18.5	**22**	**200 L**	978	181	IE3	IE2	91.7	92.5	92.5	0.79	37	2.5	5.6	2.6	63	76	**1LE1 ■ 03-2AC4 ■-■■■■**	215	0.28	16
22	**26.5**	**200 L**	978	215	IE3	IE2	92.2	93	92.9	0.79	43.5	2.5	5.6	2.6	63	76	**1LE1 ■ 03-2AC5 ■-■■■■**	230	0.32	16
30	**36**	**225 M**	982	292	IE3	IE2	92.9	93.6	93.5	0.83	56	2.6	6.6	3	64	77	**1LE1 ■ 03-2BC2 ■-■■■■**	325	0.67	16
37	**44.5**	**250 M**	985	359	IE3	IE2	93.3	94	94	0.85	67	2.7	7	2.9	62	75	**1LE1 ■ 03-2CC2 ■-■■■■**	405	1	16
45	**54**	**280 S**	988	435	IE3	IE2	93.7	94.3	94.2	0.85	82	3	6.8	2.8	60	74	**1LE1 ■ 03-2DC0 ■-■■■■**	510	1.4	16
55	**66**	**280 M**	988	532	IE3	IE2	94.1	94.6	94.4	0.85	99	3.2	7.2	3	60	74	**1LE1 ■ 03-2DC2 ■-■■■■**	560	1.6	16
75	**90**	**315 S**	990	723	IE3	IE3	94.6	94.9	94.4	0.84	136	2.6	7.5	3.1	63	78	**1LE1 ■ 03-3AC0 ■-■■■■**	750	2.6	16
90	**108**	**315 M**	991	867	IE3	IE2	94.9	95.3	95	0.85	161	2.5	6.7	2.8	63	78	**1LE1 ■ 03-3AC2 ■-■■■■**	890	3.1	16
110	**132**	**315 L**	991	1060	IE3	IE2	95.1	95.5	95.3	0.84	199	2.8	7.2	3	63	78	**1LE1 ■ 03-3AC4 ■-■■■■**	990	3.9	16
132	**158**	**315 L**	991	1272	IE3	IE2	95.4	95.9	95.8	0.84	240	2.7	7.2	3	67	82	**1LE1 ■ 03-3AC5 ■-■■■■**	1110	4.4	16

	Relubrication	Motor protection	Fan cover	Bearing size	Liability for defects		
Basic Line	Optional (standard from FS 280 upwards)	Optional	Plastic	62 (63 from FS 280 upwards)	12 months	5	
Performance Line	Standard from FS 160 (optional for FS 100 to 132)	Standard PTC	Steel	63	36 months	6	

Voltages [2]			No. of poles	Frame size	Motor type	Version			Order code(s)
50 Hz	230 VΔ/400 VY	60 Hz [1] 460 VY	6	71 M ... 315 L	1LE1■03-0C … -3A	**Standard**	2	2	–
50 Hz	400 VΔ/690 VY	60 Hz [1] 460 VΔ	6	71 M ... 315 L	1LE1■03-0C … -3A	**Standard**	3	4	–
50 Hz	500 VY		6	71 M ... 315 L	1LE1■03-0C … -3A	Without add. chrg.	2	7	–
50 Hz	500 VΔ		6	100 L ... 315 L	1LE1■03-1A … -3A	Without add. chrg.	4	0	–
Further voltages [1]		For price information, code numbers, order codes and descriptions, see from Page 2/60					9	0	. . .

Types of construction		No. of poles	Frame size	Motor type	Version		Order code(s)
Without flange	IM B3 [3]	6	71 M ... 315 L	1LE1■03-0C … -3A	**Standard**	A	–
With flange	IM B5 [3]	6	71 M ... 315 M	1LE1■03-0C … -3A	With additional charge	F	–
Further types of construction	For price information, code letters and descriptions, see from Page 2/66					■	. . .

Motor protection	Line	No. of poles	Frame size	Motor type	Version		Order code(s)
Without	Only possible for **Basic Line**	6	71 M ... 315 L	1LE1503-0C … -3A	**Standard**	A	–
PTC thermistor with 3 temperature sensors	**Basic Line**	6	71 M ... 315 L	1LE1503-0C … -3A	With additional charge	B	–
	Performance Line	6	100 L ... 315 L	1LE1603-1A … -3A	**Standard**	B	–
Further motor protection	For price information, code letters and descriptions, see from Page 2/71					■	. . .

Terminal box position	No. of poles	Frame size	Motor type	Version		Order code(s)
Terminal box at top	6	71 M ... 315 L	1LE1■03-0C … -3A	**Standard**	4	–
Further terminal box positions	For price information, code numbers and descriptions, see from Page 2/73					

Special versions	No. of poles	Frame size	Motor type			Order code(s)
Forced-air cooled motors without ext. fan/fan cover (IC 416)	6	71 M ... 315 L	1LE1■03-0C … -3A	**1LE1■03-. . . .**	■-■■■■-Z	**F90+. . .+. . .+. . .**
Options	For price information, order codes and descriptions, see from Page 2/80			**1LE1■03-. . . .**	■-■■■■-Z	**. . .+. . .+. . .+. . .**

1) Operating values at rated output for 60 Hz are stored in the Drive Technology (DT) Configurator.

2) Parallel supply lines are required in the case of connection to ≤ 240 V. For frame size 315 with connection to ≤ 240 V, due to the high current, a drilled, removable entry plate (Order code **R52**) or a larger terminal box (Order code **R50**) can be used. Order codes **R52** and **R50** alter the motor dimensions.

3) Types derived from IM B3 (IM B6/7/8, IM V6 and IM V5), from IM B5 (IM V3 and IM V1) and from IM B14 (IM V19 and IM V18) are possible, provided that no requirement exists for stamping of the type on the rating plate. The basic type IM B3, IM B5 or IM B14 is stamped as standard on the rating plate. If mounted in a different position, the position must be specified to ensure that the condensation drainage holes are positioned correctly.

© Siemens AG 2015

Selection and ordering data

P_{rated}, 50 Hz	P_{rated}, 60 Hz	Frame size	Operating values at rated output: n_{rated}, 50 Hz	T_{rated}, 50 Hz	IE class 50 Hz	IE class 60 Hz	η_{rated}, 50 Hz, 4/4	η_{rated}, 50 Hz, 3/4	η_{rated}, 50 Hz, 2/4	cos φ_{rated}, 50 Hz, 4/4	I_{rated}, 50 Hz, 400 V	T_{LR}/T_{rated}, 50 Hz	I_{LR}/I_{rated}, 50 Hz	T_B/T_{rated}, 50 Hz	L_{pfA}, 50 Hz	L_{WA}, 50 Hz	Cast-iron series **1LE1503** – *Basic Line* **1LE1603** – *Performance Line* *IE3 version in accordance with IEC 60034-30 with increased output* Article No.	$m_{IM\ B3}$	J	Torque class
kW	kW	FS	rpm	Nm	50 Hz	60 Hz	%	%	%		A				dB(A)	dB(A)	▲ New	kg	kgm^2	CL
• **Cooling: self-ventilated (IC411)** • **Efficiency: IE2 High Efficiency, service factor (SF) 1.15** • **Insulation: thermal class 155 (temperature class F), IP55 degree of protection, utilization in accordance with thermal class 130 (temperature class B)**																				
2-pole: 3000 rpm at 50 Hz, 3600 rpm at 60 Hz [1]																				
11	**12.6**	**132 M**	2955	36	IE3	IE3	91.2	91.2	90.2	0.86	20	2.4	8.8	4	68	80	▲ **1LE1 ■ 03-1CA6 ■-■■■■**	80	0.031	16
22	**25.3**	**160 L**	2950	71	IE3	IE3	92.7	92.7	91.2	0.91	37.5	2.8	8.7	4	70	82	▲ **1LE1 ■ 03-1DA6 ■-■■■■**	137	0.077	16
30	**33.5**	**180 L**	2950	97	IE3	IE3	93.3	93.9	93.9	0.88	53	2.6	8.6	3.9	69	82	▲ **1LE1 ■ 03-1EA6 ■-■■■■**	173	0.094	16
45	**51**	**200 L**	2950	146	IE3	IE3	94	94.6	94.7	0.87	79	2.5	7.1	3.2	72	85	▲ **1LE1 ■ 03-2AA6 ■-■■■■**	245	0.16	16
55	**62**	**225 M**	2965	177	IE3	IE3	94.3	94.5	94.2	0.9	94	3	8.2	3.8	73	87	▲ **1LE1 ■ 03-2BA6 ■-■■■■**	390	0.31	16
75	**84**	**250 M**	2970	241	IE3	IE3	94.7	94.9	94.5	0.89	128	2.2	6.9	3	74	88	▲ **1LE1 ■ 03-2CA6 ■-■■■■**	470	0.56	13
110	**123**	**280 M**	2975	353	IE3	IE3	95.2	95.5	95.2	0.91	183	2.5	7.5	3.3	75	89	▲ **1LE1 ■ 03-2DA6 ■-■■■■**	670	1.1	16
4-pole: 1500 rpm at 50 Hz, 1800 rpm at 60 Hz [1]																				
18.5	**21.3**	**160 L**	1475	120	IE3	IE3	92.6	92.9	92.3	0.81	35.5	2.9	7.9	3.9	65	77	▲ **1LE1 ■ 03-1DB6 ■-■■■■**	126	0.101	16
30	**34.5**	**180 L**	1470	195	IE3	IE2	93.6	94.3	94.2	0.79	59	2.8	7.8	3.7	60	73	▲ **1LE1 ■ 03-1EB6 ■-■■■■**	193	0.173	16
37	**42.5**	**200 L**	1475	240	IE3	IE3	93.9	94.4	94.4	0.81	70	3.1	8.1	3.5	58	71	▲ **1LE1 ■ 03-2AB6 ■-■■■■**	260	0.275	16
55	**63**	**225 M**	1478	355	IE3	IE3	94.6	95.4	95.7	0.85	99	2.8	6.3	2.7	66	79	▲ **1LE1 ■ 03-2BB6 ■-■■■■**	415	0.65	16
75	**86**	**250 M**	1485	482	IE3	IE3	95	95.2	94.8	0.85	134	3	7.6	3.4	69	83	▲ **1LE1 ■ 03-2CB6 ■-■■■■**	490	1.1	16
110	**127**	**280 M**	1485	707	IE3	IE3	95.4	95.9	95.7	0.86	194	2.7	7.2	3	70	84	▲ **1LE1 ■ 03-2DB6 ■-■■■■**	730	1.9	16
6-pole: 1000 rpm at 50 Hz, 1200 rpm at 60 Hz [1]																				
18.5	**22**	**180 L**	975	181	IE3	IE3	91.7	92.3	92.1	0.77	38	2.6	6.9	3.3	67	80	▲ **1LE1 ■ 03-1EC6 ■-■■■■**	185	0.247	16
30	**36**	**200 L**	978	293	IE3	IE2	92.9	93.6	93.7	0.79	59	2.8	6.5	2.8	63	76	▲ **1LE1 ■ 03-2AC6 ■-■■■■**	264	0.434	16
37	**44.5**	**225 M**	985	359	IE3	IE2	93.3	93.9	93.7	0.82	70	3	7.6	3.3	60	74	▲ **1LE1 ■ 03-2BC6 ■-■■■■**	395	0.84	16
45	**54**	**250 M**	986	436	IE3	IE2	93.7	94.3	94.4	0.84	83	2.8	7	2.9	63	78	▲ **1LE1 ■ 03-2CC6 ■-■■■■**	480	1.3	16
75	**90**	**280 M**	988	725	IE3	IE3	94.6	95	94.9	0.84	136	3.7	8.1	3.2	63	78	▲ **1LE1 ■ 03-2DC6 ■-■■■■**	620	1.9	16
160	**192**	**315 L**	991	1542	IE3	IE2	95.6	95.8	95.4	0.83	290	3.3	7.7	3.5	67	82	▲ **1LE1 ■ 03-3AC6 ■-■■■■**	1160	4.6	16

	Relubrication	Motor protection	Fan cover	Bearing size	Liability for defects						
Basic Line	Optional (standard from FS 280 upwards)	Optional	Plastic	62 (63 from FS 280 upwards)	12 months	**5**					
Performance Line	Standard from FS 160 (optional for FS 100 to 132)	Standard PTC	Steel	63	36 months	**6**					

Voltages [2]			No. of poles	Frame size	Motor type	Version					Order code(s)
50 Hz	230 VΔ/400 VY	60 Hz [1]	460 VY	2, 4, 6	132 M ... 280 M	1LE1■03-1C … -2D	**Standard**	**2**	**2**		–
50 Hz	400 VΔ/690 VY	60 Hz [1]	460 VΔ	2, 4, 6	132 M ... 280 M	1LE1■03-1C … -2D	**Standard**	**3**	**4**		–
50 Hz	500 VY			2, 4, 6	132 M ... 280 M	1LE1■03-1C … -2D	Without add. chrg.	**2**	**7**		–
50 Hz	500 VΔ			2, 4, 6	132 M ... 280 M	1LE1■03-1C … -2D	Without add. chrg.	**4**	**0**		–
Further voltages [1]		For price information, code numbers, order codes and descriptions, see from Page 2/60						**9**	**0**		. . .

Types of construction		No. of poles	Frame size	Motor type	Version				Order code(s)
Without flange	IM B3 [3]	2, 4, 6	132 M ... 280 M	1LE1■03-1C … -2D	**Standard**		**A**		–
With flange	IM B5 [3]	2, 4, 6	132 M ... 280 M	1LE1■03-1C … -2D	With additional charge		**F**		–
With standard flange	IM B14 [3]	2, 4, 6	132 M ... 280 M	1LE1■03-1C … -2D	With additional charge		**K**		–
Further types of construction	For price information, code letters and descriptions, see from Page 2/66						**■**		. . .

Motor protection	Line	No. of poles	Frame size	Motor type	Version				Order code(s)
Without	Only possible for **Basic Line**	2, 4, 6	132 M ... 280 M	1LE1503-1C … -2D	**Standard**		**A**		–
PTC thermistor with 3 temperature sensors	**Basic Line**	2, 4, 6	132 M ... 280 M	1LE1503-1C … -2D	With additional charge		**B**		–
	Performance Line	2, 4, 6	132 M ... 280 M	1LE1603-1C … -2D	**Standard**		**B**		–
Further motor protection	For price information, code letters and descriptions, see from Page 2/71						**■**		. . .

Terminal box position	No. of poles	Frame size	Motor type	Version				Order code(s)
Terminal box at top	2, 4, 6	132 M ... 280 M	1LE1■03-1C … -2D	**Standard**			**4**	–
Further terminal box positions	For price information, code numbers and descriptions, see from Page 2/73							

Special versions	No. of poles	Frame size	Motor type					Order code(s)
Options	For price information, order codes and descriptions, see from Page 2/80			**1LE1■03- . . . . ■-■■■■**			**-Z**	. . .+. . .+. . .+. . .

[1] Operating values at rated output for 60 Hz are stored in the Drive Technology (DT) Configurator.

[2] Parallel supply lines are required in the case of connection to ≤ 240 V. For frame size 315 with connection to ≤ 240 V, due to the high current, a drilled, removable entry plate (Order code **R52**) or a larger terminal box (Order code **R50**) can be used. Order codes **R52** and **R50** alter the motor dimensions.

[3] Types derived from IM B3 (IM B6/7/8, IM V6 and IM V5), from IM B5 (IM V3 and IM V1) and from IM B14 (IM V19 and IM V18) are possible, provided that no requirement exists for stamping of the type on the rating plate. The basic type IM B3, IM B5 or IM B14 is stamped as standard on the rating plate. If mounted in a different position, the position must be specified to ensure that the condensation drainage holes are positioned correctly.

© Siemens AG 2015

Selection and ordering data

P_{rated}, 50 Hz	P_{rated}, 60 Hz	Frame size	Operating values at rated output: n_{rated}, 60 Hz	T_{rated}, 60 Hz	IE class	η_{rated}, 60 Hz, 4/4	η_{rated}, 60 Hz, 3/4	η_{rated}, 60 Hz, 2/4	cos φ_{rated}, 60 Hz, 4/4	I_{rated}, 60 Hz, 460 V	T_{LR}/T_{rated}, 60 Hz	I_{LR}/I_{rated}, 60 Hz	T_B/T_{rated}, 60 Hz	L_{pfA}, 60 Hz	L_{WA}, 60 Hz	**Cast-iron series** 1LE1543 – *Basic Line* 1LE1643 – *Performance Line* *IE3 version in accordance with IEC 60034-30* Article No.	$m_{IM\ B3}$	J	Torque class
kW	kW	FS	rpm	Nm		%	%	%		A				dB(A)	dB(A)	▲ New	kg	kgm²	CL
• Cooling: self-ventilated (IC411) or with order code F90 forced-air cooled without external fan and fan cover (IC416) • Insulation: thermal class 155 (temperature class F), IP55 degree of protection, utilization in accordance with thermal class 130 (temperature class B)																			
2-pole: 3000 rpm at 50 Hz, 3600 rpm at 60 Hz																			
37	**41.5**	**200 L**	3560	99	IE3	93	92.8	91.6	0.88	57	2.8	7.5	3.6	79	81	▲ **1LE1■43-2AA5■-■■■■**	250	0.158	16
45	**51**	**225 M**	3570	120	IE3	93.6	93.7	93.1	0.88	68	2.7	7.6	3.5	75	87	▲ **1LE1■43-2BA2■-■■■■**	315	0.26	16
55	**62**	**250 M**	3578	147	IE3	93.6	93.4	92.3	0.89	84	2.5	7.3	3.3	76	87	▲ **1LE1■43-2CA2■-■■■■**	385	0.46	13
75	**84**	**280 S**	3578	200	IE3	94.1	93.9	92.7	0.89	112	2.7	7.6	3.2	78	88	▲ **1LE1■43-2DA0■-■■■■**	510	0.77	13
90	**101**	**280 M**	3578	240	IE3	95	94.8	93.8	0.9	137	2.7	8.1	3.3	78	88	▲ **1LE1■43-2DA2■-■■■■**	590	0.94	13
110	**123**	**315 S**	3585	293	IE3	95	94.8	93.8	0.91	162	2.6	8	3.3	79	89	▲ **1LE1■43-3AA0■-■■■■**	750	1.39	13
160	**180**	**315 L**	3588	399	IE3	95.4	95.1	93.9	0.91	215	3.3	9.1	3.7	82	91	▲ **1LE1■43-3AA4■-■■■■**	980	1.9	13
200	**224**	**315 L**	3586	493	IE3	95.8	95.7	94.8	0.92	265	3.5	8.5	3.5	82	91	▲ **1LE1■43-3AA5■-■■■■**	1150	2.3	13
4-pole: 1500 rpm at 50 Hz, 1800 rpm at 60 Hz																			
37	**42.5**	**225 S**	1782	198	IE3	94.5	94.7	94.2	0.85	58	2.8	7.5	3	66	78	▲ **1LE1■43-2BB0■-■■■■**	285	0.42	16
45	**52**	**225 M**	1782	241	IE3	95	95.3	94.9	0.84	70	2.9	7.2	3	67	78	▲ **1LE1■43-2BB2■-■■■■**	320	0.47	16
55	**63**	**250 M**	1786	294	IE3	95.4	95.6	95.1	0.86	86	2.8	7.6	3.2	67	79	▲ **1LE1■43-2CB2■-■■■■**	420	0.85	16
90	**104**	**280 M**	1788	481	IE3	95.4	95.5	94.9	0.87	141	2.9	8	3.3	79	84	▲ **1LE1■43-2DB2■-■■■■**	670	1.7	16
110	**127**	**315 S**	1790	587	IE3	95.8	95.9	95.4	0.86	170	3	7.5	3.1	73	84	▲ **1LE1■43-3AB0■-■■■■**	760	2.2	16
132	**152**	**315 M**	1790	704	IE3	96.2	96.3	95.8	0.87	196	3.1	8.2	3.2	76	87	▲ **1LE1■43-3AB2■-■■■■**	960	2.9	16
160	**184**	**315 L**	1791	800	IE3	96.2	96.2	95.7	0.87	225	3.5	8.8	3.6	76	87	▲ **1LE1■43-3AB4■-■■■■**	990	3.1	16
200	**230**	**315 L**	1791	986	IE3	96.2	96.2	95.5	0.87	280	3.9	9	3.6	78	87	▲ **1LE1■43-3AB5■-■■■■**	1190	3.7	16

	Relubrication	Motor protection	Fan cover	Bearing size	Liability for defects						
Basic Line	Optional (standard from FS 280 upwards)	Optional	Plastic	62 (63 from FS 280 upwards)	12 months	5					
Performance Line	Standard from FS 160	Standard PTC	Steel	63	36 months	6					

Voltages (600 V) [1]				No. of poles	Frame size	Motor type	Version					Order code(s)
50 Hz	230 VΔ/400 VY	60 Hz	460 VY	2, 4	200 L ... 315 L	1LE1■43-2A ... -3A	**Standard**	2	2			–
50 Hz	400 VΔ	60 Hz	460 VΔ	2, 4	200 L ... 315 L	1LE1■43-2A ... -3A	**Standard**	3	4			–
50 Hz	500 VY			2, 4	200 L ... 315 L	1LE1■43-2A ... -3A	Without add. chrg.	2	7			–
50 Hz	500 VΔ			2, 4	200 L ... 315 L	1LE1■43-2A ... -3A	Without add. chrg.	4	0			–
Further voltages		For price information, code numbers, order codes and descriptions, see from Page 2/60						9	0			. . .

Types of construction			No. of poles	Frame size	Motor type	Version					Order code(s)
Without flange	IM B3 [2]		2, 4	200 L ... 315 L	1LE1■43-2A ... -3A	**Standard**			A		–
With flange	IM B5 [2]		2, 4	200 L ... 315 L	1LE1■43-2A ... -3A	With additional charge			F		–
Further types of construction		For price information, code letters and descriptions, see from Page 2/66							■		. . .

Motor protection	Line	No. of poles	Frame size	Motor type	Version					Order code(s)
Without	Only possible for **Basic Line**	2, 4	200 L ... 315 L	1LE1543-2A ... -3A	**Standard**				A	–
PTC thermistor with 3 temperature sensors	**Basic Line**	2, 4	200 L ... 315 L	1LE1543-2A ... -3A	With additional charge				B	–
	Performance Line	2, 4	200 L ... 315 L	1LE1643-2A ... -3A	**Standard**				B	–
Further motor protection	For price information, code letters and descriptions, see from Page 2/71								■	. . .

Terminal box position	No. of poles	Frame size	Motor type	Version					Order code(s)
Terminal box at top	2, 4	200 L ... 315 L	1LE1■43-2A ... -3A	**Standard**				4	–
Further terminal box positions	For price information, code numbers and descriptions, see from Page 2/73								

Special versions	No. of poles	Frame size	Motor type		Order code(s)
Forced-air cooled motors without ext. fan/fan cover (IC 416)	2, 4	200 L ... 315 L	1LE1■43-2A ... -3A	**1LE1■43-. . . . ■-■■■■-Z**	**F90+. . .+. . .+. . .**
Options	For price information, order codes and descriptions, see from Page 2/80			**1LE1■43-. . . . ■-■■■■-Z**	**. . .+. . .+. . .+. . .**

[1] Operating voltages only ≤ 600 V admissible in accordance with MG1 Table 12-12.
Parallel supply lines are required in the case of connection to ≤ 240 V.
For frame size 315 with connection to ≤ 240 V, due to the high current, a drilled, removable entry plate (Order code **R52**) or a larger terminal box (Order code **R50**) can be used. Order codes **R52** and **R50** alter the motor dimensions.

[2] Types derived from IM B3 (IM B6/7/8, IM V6 and IM V5), from IM B5 (IM V3 and IM V1) and from IM B14 (IM V19 and IM V18) are possible, provided that no requirement exists for stamping of the type on the rating plate. The basic type IM B3, IM B5 or IM B14 is stamped as standard on the rating plate. If mounted in a different position, the position must be specified to ensure that the condensation drainage holes are positioned correctly.

© Siemens AG 2015

Selection and ordering data

P_{rated}, 50 Hz	P_{rated}, 60 Hz	Frame size	Operating values at rated output: n_{rated}, 60 Hz	T_{rated}, 60 Hz	IE class	η_{rated}, 60 Hz, 4/4	η_{rated}, 60 Hz, 3/4	η_{rated}, 60 Hz, 2/4	cos φ_{rated}, 60 Hz, 4/4	I_{rated}, 60 Hz, 460 V	T_{LR}/T_{rated}, 60 Hz	I_{LR}/I_{rated}, 60 Hz	T_B/T_{rated}, 60 Hz	L_{pfA}, 60 Hz	L_{WA}, 60 Hz	Cast-iron series 1LE1543 – *Basic Line* 1LE1643 – *Performance Line* *IE3 version in accordance with IEC 60034-30* Article No.	$m_{IM\ B3}$	J	Torque class
kW	kW	FS	rpm	Nm		%	%	%		A				dB(A)	dB(A)	▲ New	kg	kgm²	CL
• Cooling: self-ventilated (IC411) or with order code F90 forced-air cooled without external fan and fan cover (IC416) • Insulation: thermal class 155 (temperature class F), IP55 degree of protection, utilization in accordance with thermal class 130 (temperature class B)																			
6-pole: 1000 rpm at 50 Hz, 1200 rpm at 60 Hz																			
55	**66**	**280 M**	1190	441	IE3	94.5	94.6	94	0.83	90	3.6	7.9	3.3	66	74	▲ **1LE1 ■ 43-2DC2 ■-■■■■**	560	1.6	16
75	**90**	**315 S**	1192	601	IE3	95	94.9	94.1	0.82	120	3.1	8.4	3.3	64	78	▲ **1LE1 ■ 43-3AC0 ■-■■■■**	750	2.6	16
90	**108**	**315 M**	1192	721	IE3	95	95.1	94.4	0.84	147	2.7	7.7	3	64	78	▲ **1LE1 ■ 43-3AC2 ■-■■■■**	890	3.1	16
132	**158**	**315 L**	1192	1057	IE3	95.8	96	95.6	0.84	205	3.1	8.4	3.3	65	82	▲ **1LE1 ■ 43-3AC5 ■-■■■■**	1110	4.4	16

	Relubrication	Motor protection	Fan cover	Bearing size	Liability for defects		
Basic Line	Optional (standard from FS 280 upwards)	Optional	Plastic	62 (63 from FS 280 upwards)	12 months	**5**	
Performance Line	Standard from FS 160 (optional for FS 100 to 132)	Standard PTC	Steel	63	36 months	**6**	

Voltages (600 V) [1]			No. of poles	Frame size	Motor type	Version			Order code(s)
50 Hz	230 VΔ/400 VY	60 Hz	460 VY	6	280 M ... 315 L	1LE1■43-2D … -3A	**Standard**	**2**	**2**	–
50 Hz	400 VΔ	60 Hz	460 VΔ	6	280 M ... 315 L	1LE1■43-2D … -3A	**Standard**	**3**	**4**	–
50 Hz	500 VY			6	280 M ... 315 L	1LE1■43-2D … -3A	Without add. chrg.	**2**	**7**	–
50 Hz	500 VΔ			6	280 M ... 315 L	1LE1■43-2D … -3A	Without add. chrg.	**4**	**0**	–
Further voltages		For price information, code numbers, order codes and descriptions, see from Page 2/60						**9**	**0**	. . .

Types of construction		No. of poles	Frame size	Motor type	Version		Order code(s)
Without flange	IM B3 [2]	6	280 M ... 315 L	1LE1■43-2D … -3A	**Standard**	**A**	–
With flange	IM B5 [2]	6	280 M ... 315 L	1LE1■43-2D … -3A	With additional charge	**F**	–
Further types of construction	For price information, code letters and descriptions, see from Page 2/66					■	. . .

Motor protection	Line	No. of poles	Frame size	Motor type	Version		Order code(s)
Without	Only possible for **Basic Line**	6	280 M ... 315 L	1LE1543-2D … -3A	**Standard**	**A**	–
PTC thermistor with 3 temperature sensors	**Basic Line**	6	280 M ... 315 L	1LE1543-2D … -3A	With additional charge	**B**	–
	Performance Line	6	280 M ... 315 L	1LE1543-2D … -3A	**Standard**	**B**	–
Further motor protection	For price information, code letters and descriptions, see from Page 2/71					■	. . .

Terminal box position	No. of poles	Frame size	Motor type	Version		Order code(s)
Terminal box at top	6	280 M ... 315 L	1LE1■43-2D … -3A	**Standard**	**4**	–
Further terminal box positions	For price information, code numbers and descriptions, see from Page 2/73					

Special versions	No. of poles	Frame size	Motor type		Order code(s)
Forced-air cooled motors without ext. fan/fan cover (IC 416)	6	280 M ... 315 L	1LE1■43-2D … -3A	**1LE1■43-. . . . ■-■■■■-Z**	**F90+. . .+. . .+. . .**
Options	For price information, order codes and descriptions, see from Page 2/80			**1LE1■43-. . . . ■-■■■■-Z**	**. . .+. . .+. . .+. . .**

[1] Operating voltages only ≤ 600 V admissible in accordance with MG1 Table 12-12.
Parallel supply lines are required in the case of connection to ≤ 240 V.
For frame size 315 with connection to ≤ 240 V, due to the high current, a drilled, removable entry plate (Order code **R52**) or a larger terminal box (Order code **R50**) can be used. Order codes **R52** and **R50** alter the motor dimensions.

[2] Types derived from IM B3 (IM B6/7/8, IM V6 and IM V5), from IM B5 (IM V3 and IM V1) and from IM B14 (IM V19 and IM V18) are possible, provided that no requirement exists for stamping of the type on the rating plate. The basic type IM B3, IM B5 or IM B14 is stamped as standard on the rating plate. If mounted in a different position, the position must be specified to ensure that the condensation drainage holes are positioned correctly.

© Siemens AG 2015

Selection and ordering data

			Operating values at rated output														Cast-iron series **1LE1543** – *Basic Line* **1LE1643** – *Performance Line* *IE3 version in accordance with IEC 60034-30* Article No.			
P_{rated}, 50 Hz	P_{rated}, 60 Hz	Frame size	n_{rated}, 60 Hz	T_{rated}, 60 Hz	IE class	η_{rated}, 60 Hz, 4/4	η_{rated}, 60 Hz, 3/4	η_{rated}, 60 Hz, 2/4	cos φ_{rated}, 60 Hz, 4/4	I_{rated}, 60 Hz, 460 V	T_{LR}/T_{rated}, 60 Hz	I_{LR}/I_{rated}, 60 Hz	T_B/T_{rated}, 60 Hz	L_{pfA}, 60 Hz	L_{WA}, 60 Hz			$m_{IM\ B3}$	J	Torque class
kW	kW	FS	rpm	Nm		%	%	%		A				dB(A)	dB(A)	▲ New		kg	kgm^2	CL
• Cooling: self-ventilated (IC411) **• Insulation: thermal class 155 (temperature class F), IP55 degree of protection, utilization in accordance with thermal class 130 (temperature class B)**																				
6-pole: 1000 rpm at 50 Hz, 1200 rpm at 60 Hz																				
160	**192**	**315 L**	1192	1202	IE3	95.8	95.7	95	0.81	240	3.6	9.6	4.1	69	82	▲ **1LE1** ■ **43-3AC6** ■-■■■■		1160	4.6	16

| | | | | | | | | | | | | | | | | | | |

© Siemens AG 2015

Selection and ordering data

P_{rated}, 50 Hz	P_{rated}, 50 Hz	Frame size	Operating values at rated output: n_{rated}, 50 Hz	T_{rated}, 50 Hz	IE class	η_{rated}, 50 Hz, 4/4	η_{rated}, 50 Hz, 3/4	η_{rated}, 50 Hz, 2/4	cos φ_{rated}, 50 Hz, 4/4	I_{rated}, 50 Hz, 400 V	T_{LR}/T_{rated}, 50 Hz	I_{LR}/I_{rated}, 50 Hz	T_B/T_{rated}, 50 Hz	L_{pfA}, 50 Hz	L_{WA}, 50 Hz	**Aluminum series 1LE1004** – *IE4 version in accordance with IEC 60034-30* Article No.	$m_{IM\ B3}$	J	Torque class
kW	kW	FS	rpm	Nm		%	%	%		A				dB(A)	dB(A)	▲ New	kg	kgm²	CL
• Cooling: self-ventilated (IC411) or with order code F90 forced-air cooled without external fan and fan cover (IC416) • Efficiency: IE4 Super Premium Efficiency, service factor (SF) 1.15 • Insulation: thermal class 155 (temperature class F), IP55 degree of protection, utilization in accordance with thermal class 130 (temperature class B)																			
2-pole: 3000 rpm at 50 Hz, 3600 rpm at 60 Hz [1]																			
3	**3.45**	**100 L**	2920	9.8	IE4	89.1	89.8	89.4	0.86	5.7	3.7	9.0	4.9	62	74	▲ **1LE1004-1AA4■-■■■■**	27	0.0054	16
4	**4.55**	**112 M**	2950	13	IE4	90.0	90.6	90.1	0.89	7.2	2.8	8.7	4.5	69	81	▲ **1LE1004-1BA2■-■■■■**	34	0.012	16
5.5	**6.3**	**132 S**	2960	18	IE4	90.9	90.9	89.8	0.84	10.4	2.1	8.6	4.6	68	80	▲ **1LE1004-1CA0■-■■■■**	44	0.024	16
7.5	**8.6**	**132 S**	2955	24	IE4	91.7	92.4	92.3	0.91	13.0	2.2	8.6	4.3	68	80	▲ **1LE1004-1CA1■-■■■■**	56	0.031	16
11	**12.6**	**160 M**	2955	36	IE4	92.6	92.8	92.0	0.90	19.1	2.8	8.6	4.2	74	87	▲ **1LE1004-1DA2■-■■■■**	84	0.061	16
15	**17.3**	**160 M**	2955	48	IE4	93.3	93.5	92.9	0.90	26.0	3.1	9.0	4.5	74	87	▲ **1LE1004-1DA3■-■■■■**	98	0.068	16
18.5	**21.3**	**160 L**	2955	60	IE4	93.7	94.1	93.8	0.91	31.5	3.1	8.9	4.3	74	87	▲ **1LE1004-1DA4■-■■■■**	112	0.074	16
22	**24.5**	**180 M**	2950	71	IE4	94.0	94.4	94.1	0.89	38.0	2.8	8.9	4.1	71	84	▲ **1LE1004-1EA2■-■■■■**	139	0.091	16
30	**33.5**	**200 L**	2965	97	IE4	94.5	94.8	94.4	0.83	55.0	2.8	7.9	4.0	71	85	▲ **1LE1004-2AA4■-■■■■**	173	0.13	16
37	**41.5**	**200 L**	2960	119	IE4	94.8	95.1	95.0	0.86	66.0	2.9	7.9	3.9	71	85	▲ **1LE1004-2AA5■-■■■■**	214	0.20	16
4-pole: 1500 rpm at 50 Hz, 1800 rpm at 60 Hz [1]																			
2.2	**2.55**	**100 L**	1465	14	IE4	89.5	89.6	88.3	0.79	4.5	3.3	8.5	4.7	63	75	▲ **1LE1004-1AB4■-■■■■**	30	0.014	16
3	**3.45**	**100 L**	1460	20	IE4	90.4	91.0	90.5	0.81	5.9	3.5	8.8	4.2	63	75	▲ **1LE1004-1AB5■-■■■■**	38	0.016	16
4	**4.55**	**112 M**	1465	26	IE4	91.1	91.5	91.0	0.81	7.8	3.1	8.3	4.3	65	77	▲ **1LE1004-1BB2■-■■■■**	46	0.020	16
5.5	**6.3**	**132 S**	1470	36	IE4	91.9	92.5	92.3	0.83	10.4	2.6	8.3	3.5	56	68	▲ **1LE1004-1CB0■-■■■■**	59	0.039	16
7.5	**8.6**	**132 M**	1470	49	IE4	92.6	93.1	92.7	0.81	14.4	3.0	7.7	4.0	56	68	▲ **1LE1004-1CB2■-■■■■**	62	0.046	16
11	**12.6**	**160 M**	1475	71	IE4	93.3	93.5	92.9	0.82	21.0	2.9	8.1	4.1	63	76	▲ **1LE1004-1DB2■-■■■■**	98	0.099	16
15	**17.3**	**160 L**	1480	97	IE4	93.9	94.0	93.3	0.80	29.0	3.7	7.8	4.3	63	76	▲ **1LE1004-1DB4■-■■■■**	109	0.11	16
18.5	**21.3**	**180 M**	1470	120	IE4	94.2	94.7	94.5	0.81	35.0	2.7	7.9	3.6	62	75	▲ **1LE1004-1EB2■-■■■■**	153	0.17	16
22	**25.3**	**180 L**	1475	142	IE4	94.5	95.0	94.8	0.81	41.5	2.9	7.7	3.8	62	75	▲ **1LE1004-1EB4■-■■■■**	158	0.18	16
30	**34.5**	**200 L**	1475	194	IE4	94.9	95.2	94.9	0.81	56.0	3.2	7.3	3.6	59	72	▲ **1LE1004-2AB5■-■■■■**	205	0.27	16

Voltages				Motor protection	No. of poles	Frame size	Motor type	Version				Order code(s)
Frame sizes 100 L to 200 L: use of the 4 x 90° rotatable terminal box												
50 Hz	230 VΔ/400 VY	60 Hz [1]	460 VY	Any	2, 4	100 L ... 200 L	1LE1004-1A ... -2A	**Standard**	**2**	**2**		–
50 Hz	400 VΔ/690 VY	60 Hz [1]	460 VΔ	Any	2, 4	100 L ... 200 L	1LE1004-1A ... -2A	**Standard**	**3**	**4**		–
Further voltages [1]				For price information, code numbers, order codes and descriptions, see from Page 2/57					**9**	**0**		. . .
Types of construction					No. of poles	Frame size	Motor type	Version				Order code(s)
Without flange		IM B3 [2]			2, 4	100 L ... 200 L	1LE1004-1A ... -2A	**Standard**			**A**	–
With flange		IM B5 [2]			2, 4	100 L ... 200 L	1LE1004-1A ... -2A	With additional charge			**F**	–
With standard flange		IM B14 [2]			2, 4	100 L ... 160 L	1LE1004-1A ... -1D	With additional charge			**K**	–
Further types of construction				For price information, code letters and descriptions, see from Page 2/62							■	. . .
Motor protection					No. of poles	Frame size	Motor type	Version				Order code(s)
Frame sizes 100 L to 200 L: use of the 4 x 90° rotatable terminal box												
Without					2, 4	100 L ... 200 L	1LE1004-1A ... -2A	**Standard**			**A**	–
PTC thermistor with 3 temperature sensors					2, 4	100 L ... 200 L	1LE1004-1A ... -2A	With additional charge			**B**	–
Further motor protection				For price information, code letters and descriptions, see from Page 2/70							■	. . .
Terminal box position					No. of poles	Frame size	Motor type	Version				Order code(s)
Terminal box at top					2, 4	100 L ... 200 L	1LE1004-1A ... -2A	**Standard**			**4**	–
Further terminal box positions				For price information, code numbers and descriptions, see from Page 2/72								
Special versions					No. of poles	Frame size	Motor type					Order code(s)
Forced-air cooled motors without ext. fan/fan cover (IC416)					2, 4	100 L ... 200 L	1LE1004-1A ... -2A	**1LE1004- . . . . ■-■■■■**			**-Z**	**F90** +. . .+. . .+. . .
Options				For price information, order codes and descriptions, see from Page 2/74				**1LE1004- . . . . ■-■■■■**			**-Z**	. . .+. . .+. . .+. . .

[1] Operating values at rated output for 60 Hz are stored in the Drive Technology (DT) Configurator.

[2] Types derived from IM B3 (IM B6/7/8, IM V6 and IM V5), from IM B5 (IM V3 and IM V1) and from IM B14 (IM V19 and IM V18) are possible, provided that no requirements exist for condensation drainage holes (**H03**) and stamping of the type on the rating plate. The basic type IM B3, IM B5 or IM B14 is stamped as standard on the rating plate. When ordering with condensation drainage holes (**H03**), the type must be specified.

© Siemens AG 2015

2

Selection and ordering data

P_{rated}, 50 Hz	P_{rated}, 60 Hz	Frame size	Operating values at rated output: n_{rated}, 50 Hz	T_{rated}, 50 Hz	IE class	η_{rated}, 50 Hz, 4/4	η_{rated}, 50 Hz, 3/4	η_{rated}, 50 Hz, 2/4	cos φ_{rated}, 50 Hz, 4/4	I_{rated}, 50 Hz, 460 V	T_{LR}/T_{rated}, 50 Hz	I_{LR}/I_{rated}, 50 Hz	T_B/T_{rated}, 50 Hz	L_{pfA}, 50 Hz	L_{WA}, 50 Hz	Cast-iron series 1LE1504 – *Basic Line* 1LE1604 – *Performance Line* *IE4 version in accordance with IEC 60034-30* Article No.	$m_{IM\ B3}$	J	Torque class
kW	kW	FS	rpm	Nm		%	%	%		A				dB(A)	dB(A)	▲ New	kg	kgm²	CL
• Cooling: self-ventilated (IC 411) or with order code F90 forced-air cooled without external fan and fan cover (IC 416) • Efficiency: IE4 Super Premium Efficiency, service factor (SF) 1.15 • Insulation: thermal class 155 (temperature class F), IP55 degree of protection, utilization in accordance with thermal class 130 (temperature class B)																			
2-pole: 3000 rpm at 50 Hz, 3600 rpm at 60 Hz																			
3	**3.45**	**100 L**	2920	9.8	IE4	89.1	89.8	89.4	0.86	5.7	3.7	9.0	4.9	62	74	▲ **1LE1 ■ 04-1AA4 ■-■■■■**	38	0.0054	16
4	**4.55**	**112 M**	2950	13	IE4	90.0	90.6	90.1	0.89	7.2	2.8	8.7	4.5	69	81	▲ **1LE1 ■ 04-1BA2 ■-■■■■**	45	0.012	16
5.5	**6.3**	**132 S**	2960	18	IE4	90.9	90.9	89.8	0.84	10.4	2.1	8.6	4.6	68	80	▲ **1LE1 ■ 04-1CA0 ■-■■■■**	62	0.024	16
7.5	**8.6**	**132 S**	2955	24	IE4	91.7	92.4	92.3	0.91	13.0	2.2	8.6	4.3	68	80	▲ **1LE1 ■ 04-1CA1 ■-■■■■**	74	0.031	16
11	**12.6**	**132 M**	2955	36	IE4	92.6	92.8	92.0	0.90	19.1	2.8	8.6	4.2	74	87	▲ **1LE1 ■ 04-1DA2 ■-■■■■**	113	0.061	16
15	**17.3**	**160 M**	2955	48	IE4	93.3	93.5	92.9	0.90	26.0	3.1	9.0	4.5	74	87	▲ **1LE1 ■ 04-1DA3 ■-■■■■**	130	0.068	16
18.5	**21.3**	**160 L**	2955	60	IE4	93.7	94.1	93.8	0.91	31.5	3.1	8.9	4.3	74	87	▲ **1LE1 ■ 04-1DA4 ■-■■■■**	147	0.074	16
22	**24.5**	**180 M**	2950	71	IE4	94.0	94.4	94.1	0.89	38.0	2.8	8.9	4.1	71	84	▲ **1LE1 ■ 04-1EA2 ■-■■■■**	175	0.091	16
30	**33.5**	**200 L**	2965	97	IE4	94.5	94.8	94.4	0.83	55.0	2.8	7.9	4.0	71	85	▲ **1LE1 ■ 04-2AA4 ■-■■■■**	222	0.13	16
37	**41.5**	**200 L**	2960	119	IE4	94.8	95.1	95.0	0.86	66.0	2.9	7.9	3.9	71	85	▲ **1LE1 ■ 04-2AA5 ■-■■■■**	263	0.20	16
45	**51**	**225 M**	2970	145	IE4	95.0	95.0	94.4	0.85	80.0	3.1	8.8	4.1	75	86	▲ **1LE1 ■ 04-2BA2 ■-■■■■**	330	0.26	16
55	**62**	**250 M**	2975	177	IE4	95.3	95.5	95.0	0.88	95.0	2.5	7.5	3.2	72	86	▲ **1LE1 ■ 04-2CA2 ■-■■■■**	430	0.48	16
75	**84**	**280 S**	2980	240	IE4	95.6	95.7	95.1	0.89	127	2.6	8.3	3.3	72	86	▲ **1LE1 ■ 04-2DA0 ■-■■■■**	600	0.94	16
90	**101**	**280 M**	2982	288	IE4	95.8	95.8	95.2	0.89	152	2.7	8.2	3.4	73	87	▲ **1LE1 ■ 04-2DA2 ■-■■■■**	610	1.0	16
110	**123**	**315 S**	2985	352	IE4	96.0	96.1	95.7	0.90	184	2.5	8.7	3.4	77	90	▲ **1LE1 ■ 04-3AA0 ■-■■■■**	750	1.4	16
132	**148**	**315 M**	2988	422	IE4	96.2	96.2	95.6	0.90	220	3.1	10.5	4.0	77	91	▲ **1LE1 ■ 04-3AA2 ■-■■■■**	980	1.9	16
160	**180**	**315 L**	2988	511	IE4	96.3	96.3	95.8	0.92	260	3.2	10.3	3.9	78	91	▲ **1LE1 ■ 04-3AA4 ■-■■■■**	1060	2.1	16
200	**224**	**315 L**	2985	640	IE4	96.5	96.6	96.3	0.92	325	3.4	9.9	3.8	78	92	▲ **1LE1 ■ 04-3AA5 ■-■■■■**	1180	2.4	16

	Relubrication	Motor protection	Fan cover	Bearing size	Rating plate	Liability for defects		
Basic Line	Optional (standard from FS 280 upwards)	Optional	Plastic	62 (63 from FS 280 upwards)	Aluminum, plastic	12 months	5	
Performance Line	Standard from FS 160 (optional for FS 100 to 132)	Standard PTC	Steel	63	Stainless steel	36 months	6	

Voltages [2]			No. of poles	Frame size	Motor type	Version			Order code(s)
50 Hz	230 VΔ/400 VY	60 Hz [1] 460 VY	2	100 L ... 315 L	1LE1■04-1A ... -3A	**Standard**	2	2	–
50 Hz	400 VΔ/690 VY	60 Hz [1] 460 VΔ	2	100 L ... 315 L	1LE1■04-1A ... -3A	**Standard**	3	4	–
Further voltages		For price information, code numbers, order codes and descriptions, see from Page 2/60					9	0	. . .

Types of construction		No. of poles	Frame size	Motor type	Version		Order code(s)
Without flange	IM B3 [3]	2	100 L ... 315 L	1LE1■04-1A ... -3A	**Standard**	A	–
With flange	IM B5 [3]	2	100 L ... 315 L	1LE1■04-1A ... -3A	With additional chrg.	F	–
With standard flange	IM B5 [3]	2	100 L ... 160 L	1LE1■04-1A ... -1D	With additional chrg.	K	–
Further types of construction	For price information, code letters and descriptions, see from Page 2/66					■	. . .

Motor protection		No. of poles	Frame size	Motor type	Version		Order code(s)
Without	Only possible for **Basic Line**	2	100 L ... 315 L	1LE1504-1A ... -3A	**Standard**	A	–
PTC thermistor with 3 temperature sensors	**Basic Line**	2	100 L ... 315 L	1LE1504-1A ... -3A	With additional charge	B	–
	Performance Line	2	100 L ... 315 L	1LE1504-1A ... -3A	**Standard**	B	–
Further motor protection	For price information, code letters and descriptions, see from Page 2/71					■	. . .

Terminal box position		No. of poles	Frame size	Motor type	Version		Order code(s)
Terminal box at top		2	100 L ... 315 L	1LE1■04-1A ... -3A	**Standard**	4	–
Further terminal box positions	For price information, code numbers and descriptions, see from Page 2/73						

Special versions		No. of poles	Frame size	Motor type		Order code(s)
Forced-air cooled motors without ext. fan/fan cover (IC 416)		2	100 L ... 315 L	1LE1■04-1A ... -3A	**1LE1■04-. . . . ■-■■■■-Z**	**F90** +. . .+. . .+. . .
Options	For price information, order codes and descriptions, see from Page 2/80				**1LE1■04-. . . . ■-■■■■-Z**	. . .+. . .+. . .+. . .

Note: IE4 motors (2-pole) in frame size 315 do not comply with the vibration values stipulated in IEC 60034-14 when rigidly installed (see also Page 1/46).

1) Operating values at rated output for 60 Hz are stored in the Drive Technology (DT) Configurator.

2) Parallel supply lines are required in the case of connection to ≤ 240 V. For frame size 315 with connection to ≤ 240 V, due to the high current, a drilled, removable entry plate (Order code **R52**) or a larger terminal box (Order code **R50**) can be used. Order codes **R52** and **R50** alter the motor dimensions.

3) Types derived from IM B3 (IM B6/7/8, IM V6 and IM V5), from IM B5 (IM V3 and IM V1) and from IM B14 (IM V19 and IM V18) are possible, provided that no requirement exists for stamping of the type on the rating plate. The basic type IM B3, IM B5 or IM B14 is stamped as standard on the rating plate. If mounted in a different position, the position must be specified to ensure that the condensation drainage holes are positioned correctly.

© Siemens AG 2015

Selection and ordering data (continued)

P_{rated}, 50 Hz	P_{rated}, 60 Hz	Frame size	Operating values at rated output: n_{rated}, 50 Hz	T_{rated}, 50 Hz	IE class	η_{rated}, 50 Hz, 4/4	η_{rated}, 50 Hz, 3/4	η_{rated}, 50 Hz, 2/4	cos φ_{rated}, 50 Hz, 4/4	I_{rated}, 50 Hz, 460 V	T_{LR}/T_{rated}, 60 Hz	I_{LR}/I_{rated}, 60 Hz	T_B/T_{rated}, 60 Hz	L_{pfA}, 50 Hz	L_{WA}, 50 Hz	Cast-iron series 1LE1504 – Basic Line 1LE1604 – Performance Line IE4 version in accordance with IEC 60034-30 Article No.	$m_{IM\ B3}$	J	Torque class
kW	kW	FS	rpm	Nm		%	%	%		A				dB(A)	dB(A)	▲ New	kg	kgm²	CL
• Cooling: self-ventilated (IC 411) or with order code F90 forced-air cooled without external fan and fan cover (IC 416) • Efficiency: IE4 Super Premium Efficiency, service factor (SF) 1.15 • Insulation: thermal class 155 (temperature class F), IP55 degree of protection, utilization in accordance with thermal class 130 (temperature class B)																			
4-pole: 1500 rpm at 50 Hz, 1800 rpm at 60 Hz																			
2.2	**2.55**	**100 L**	1465	14	IE4	89.5	89.6	88.3	0.79	4.5	3.3	8.5	4.7	63	75	▲ **1LE1 ■ 04-1AB4 ■-■■■■**	41	0.014	16
3	**3.45**	**100 L**	1460	20	IE4	90.4	91.0	90.5	0.81	5.9	3.5	8.8	4.2	63	75	▲ **1LE1 ■ 04-1AB5 ■-■■■■**	50	0.016	16
4	**4.55**	**112 M**	1465	26	IE4	91.1	91.5	91.0	0.81	7.8	3.1	8.3	4.3	65	77	▲ **1LE1 ■ 04-1BB2 ■-■■■■**	58	0.020	16
5.5	**6.3**	**132 S**	1470	36	IE4	91.9	92.5	92.3	0.83	10.4	2.6	8.3	3.5	56	68	▲ **1LE1 ■ 04-1CB0 ■-■■■■**	77	0.039	16
7.5	**8.6**	**132 M**	1470	49	IE4	92.6	93.1	92.7	0.81	14.4	3.0	7.7	4.0	56	68	▲ **1LE1 ■ 04-1CB2 ■-■■■■**	80	0.046	16
11	**12.6**	**132 M**	1475	71	IE4	93.3	93.5	92.9	0.82	21.0	2.9	8.1	4.1	63	76	▲ **1LE1 ■ 04-1DB2 ■-■■■■**	127	0.099	16
15	**17.3**	**160 M**	1480	97	IE4	93.9	94.0	93.3	0.80	29.0	3.7	7.8	4.3	63	76	▲ **1LE1 ■ 04-1DB4 ■-■■■■**	138	0.11	16
18.5	**21.3**	**180 M**	1470	120	IE4	94.2	94.7	94.5	0.81	35.0	2.7	7.9	3.6	62	75	▲ **1LE1 ■ 04-1EB2 ■-■■■■**	187	0.17	16
22	**25.3**	**180 L**	1475	142	IE4	94.5	95.0	94.8	0.81	41.5	2.9	7.7	3.8	62	75	▲ **1LE1 ■ 04-1EB4 ■-■■■■**	192	0.18	16
30	**34.5**	**200 L**	1475	194	IE4	94.9	95.2	94.9	0.81	56.0	3.2	7.3	3.6	59	72	▲ **1LE1 ■ 04-2AB5 ■-■■■■**	258	0.27	16
37	**42.5**	**225 S**	1485	238	IE4	95.2	95.7	95.6	0.84	67.0	3.2	8.4	3.2	69	82	▲ **1LE1 ■ 04-2BB0 ■-■■■■**	345	0.52	16
45	**52**	**225 M**	1485	289	IE4	95.4	95.9	95.7	0.84	81.0	3.3	8.2	3.3	64	79	▲ **1LE1 ■ 04-2BB2 ■-■■■■**	415	0.66	16
55	**63**	**250 M**	1486	353	IE4	95.7	96.0	95.8	0.86	96.0	3.0	8.2	3.3	67	81	▲ **1LE1 ■ 04-2CB2 ■-■■■■**	490	1.1	16
75	**86**	**280 S**	1490	481	IE4	96.0	96.1	95.7	0.85	133	2.8	9	3.5	69	83	▲ **1LE1 ■ 04-2DB0 ■-■■■■**	670	1.7	16
90	**104**	**280 M**	1488	578	IE4	96.1	96.4	96.2	0.86	157	3.0	8.9	3.5	69	83	▲ **1LE1 ■ 04-2DB2 ■-■■■■**	730	2.0	16
110	**127**	**315 M** [4]	1491	705	IE4	96.3	96.6	96.4	0.86	192	3.0	8.8	3.3	70	84	▲ **1LE1 ■ 04-3AB0 ■-■■■■**	910	2.7	16
132	**152**	**315 M**	1491	845	IE4	96.4	96.7	96.6	0.87	225	3.2	8.7	3.2	70	84	▲ **1LE1 ■ 04-3AB2 ■-■■■■**	990	3.1	16
160	**184**	**315 L**	1490	1026	IE4	96.6	96.9	96.7	0.86	280	3.4	8.8	3.4	73	87	▲ **1LE1 ■ 04-3AB4 ■-■■■■**	1220	3.7	16
200	**230**	**315 L**	1491	1281	IE4	96.7	96.9	96.6	0.86	345	3.6	8.9	3.4	73	88	▲ **1LE1 ■ 04-3AB5 ■-■■■■**	1300	4.4	16

	Relubrication	Motor protection	Fan cover	Bearing size	Rating plate	Liability for defects					
Basic Line	Optional (standard from FS 280 upwards)	Optional	Plastic	62 (63 from FS 280 upwards)	Aluminum, plastic	12 months	5				
Performance Line	Standard from FS 160 (optional for FS 100 to 132)	Standard PTC	Steel	63	Stainless steel	36 months	6				

Voltages [2]			No. of poles	Frame size	Motor type	Version					Order code(s)
50 Hz	230 VΔ/400 VY	60 Hz [1]	4	100 L ... 315 L	1LE1■04-1A ... -3A	**Standard**	2	2			–
50 Hz	400 VΔ/690 VY	60 Hz [1]	4	100 L ... 315 L	1LE1■04-1A ... -3A	**Standard**	3	4			–
Further voltages		For price information, code numbers, order codes and descriptions, see from Page 2/60					9	0			. . .

Types of construction		No. of poles	Frame size	Motor type	Version					Order code(s)
Without flange	IM B3 [3]	4	100 L ... 315 L	1LE1■04-1A ... -3A	**Standard**			A		–
With flange	IM B5 [3]	4	100 L ... 315 M	1LE1■04-1A ... -3A	With additional charge			F		–
With standard flange	IM B5 [3]	4	100 L ... 160 L	1LE1■04-1A ... -1D	With additional charge			K		–
Further types of construction	For price information, code letters and descriptions, see from Page 2/66							■		. . .

Motor protection		No. of poles	Frame size	Motor type	Version					Order code(s)
Without	Only possible for **Basic Line**	4	100 L ... 315 L	1LE1504-1A ... -3A	**Standard**				A	–
PTC thermistor with 3 temperature sensors	**Basic Line**	4	100 L ... 315 L	1LE1504-1A ... -3A	With additional charge				B	–
	Performance Line	4	100 L ... 315 L	1LE1504-1A ... -3A	**Standard**				B	–
Further motor protection	For price information, code letters and descriptions, see from Page 2/71								■	. . .

Terminal box position		No. of poles	Frame size	Motor type	Version					Order code(s)
Terminal box at top		4	100 L ... 315 L	1LE1■04-1A ... -3A	**Standard**				4	–
Further terminal box positions	For price information, code numbers and descriptions, see from Page 2/73									

Special versions		No. of poles	Frame size	Motor type						Order code(s)
Forced-air cooled motors without ext. fan/fan cover (IC 416)		4	100 L ... 315 L	1LE1■04-1A ... -3A	**1LE1■04-. . . . ■-■■■■**				**-Z**	**F90 +. . .+. . .+. . .**
Options	For price information, order codes and descriptions, see from Page 2/80				**1LE1■04-. . . . ■-■■■■**				**-Z**	**. . .+. . .+. . .+. . .**

Note: IE4 motors (2-pole) in frame size 315 do not comply with the vibration values stipulated in IEC 60034-14 when rigidly installed (see also Page 1/46).

1) Operating values at rated output for 60 Hz are stored in the Drive Technology (DT) Configurator.

2) Parallel supply lines are required in the case of connection to ≤ 240 V. For frame size 315 with connection to ≤ 240 V, due to the high current, a drilled, removable entry plate (Order code **R52**) or a larger terminal box (Order code **R50**) can be used. Order codes **R52** and **R50** alter the motor dimensions.

3) Types derived from IM B3 (IM B6/7/8, IM V6 and IM V5), from IM B5 (IM V3 and IM V1) and from IM B14 (IM V19 and IM V18) are possible, provided that no requirement exists for stamping of the type on the rating plate. The basic type IM B3, IM B5 or IM B14 is stamped as standard on the rating plate. If mounted in a different position, the position must be specified to ensure that the condensation drainage holes are positioned correctly.

4) As 315 M version (not the same as 315 S according to EN 50347).

© Siemens AG 2015

Selection and ordering data

P_{rated}, 50 Hz	P_{rated}, 60 Hz 1)	Frame size	Operating values at rated output: n_{rated}, 50 Hz	T_{rated}, 50 Hz	IE class	η_{rated}, 50 Hz, 4/4	η_{rated}, 50 Hz, 3/4	η_{rated}, 50 Hz, 2/4	cos φ_{rated}, 50 Hz, 4/4	I_{rated}, 50 Hz, 400 V	T_{LR}/T_{rated}, 50 Hz	I_{LR}/I_{rated}, 50 Hz	T_B/T_{rated}, 50 Hz	L_{pfA}, 50 Hz	L_{WA}, 50 Hz	**Aluminum series 1LE1002** – *IE1 version in accordance with IEC 60034-30* Article No.	$m_{IM\ B3}$	J	Torque class
kW	kW	FS	rpm	Nm		%	%	%		A				dB(A)	dB(A)		kg	kgm²	CL
• Cooling: self-ventilated (IC411) or with order code F90 forced-air cooled without external fan and fan cover (IC416) • Efficiency: IE1 Standard Efficiency, service factor (SF) 1.1 • Insulation: thermal class 155 (temperature class F), IP55 degree of protection, utilization in accordance with thermal class 130 (temperature class B)																			
2-pole: 3000 rpm at 50 Hz, 3600 rpm at 60 Hz 1)																			
3	**3.45**	**100 L**	2835	10	IE1	81.5	82.8	82.1	0.87	6.1	3.2	6.2	2.9	67	79	**1LE1002-1AA4■-■■■■**	20	0.0034	16
4	**4.55**	**112 M**	2930	13	IE1	83.1	83.8	82.2	0.86	8.1	2.7	7.3	3.7	69	81	**1LE1002-1BA2■-■■■■**	25	0.0067	16
5.5	**6.3**	**132 S**	2905	18	IE1	84.7	85.7	85.0	0.89	10.5	1.9	5.6	2.5	68	80	**1LE1002-1CA0■-■■■■**	35	0.013	16
7.5	**8.6**	**132 S**	2925	24	IE1	86.0	86.9	85.8	0.87	14.5	2.1	6.3	3.2	68	80	**1LE1002-1CA1■-■■■■**	40	0.016	16
11	**12.6**	**160 M**	2925	36	IE1	87.6	87.6	86.1	0.85	21.5	2.0	5.8	2.6	70	82	**1LE1002-1DA2■-■■■■**	60	0.030	16
15	**17.3**	**160 M**	2930	49	IE1	88.7	89.0	88.0	0.84	29	2.5	6.1	3.1	70	82	**1LE1002-1DA3■-■■■■**	68	0.036	16
18.5	**21.3**	**160 L**	2935	60	IE1	89.3	90.0	89.7	0.86	35	2.5	7.0	3.2	70	82	**1LE1002-1DA4■-■■■■**	78	0.044	16
4-pole: 1500 rpm at 50 Hz, 1800 rpm at 60 Hz 1)																			
2.2	**2.55**	**100 L**	1425	15	IE1	79.7	80.5	78.5	0.81	4.9	2.2	5.1	2.3	60	72	**1LE1002-1AB4■-■■■■**	18	0.0059	16
3	**3.45**	**100 L**	1425	20	IE1	81.5	83.0	82.3	0.85	6.3	2.4	5.4	2.6	60	72	**1LE1002-1AB5■-■■■■**	22	0.0078	16
4	**4.55**	**112 M**	1435	27	IE1	83.1	84.5	84.0	0.85	8.2	2.2	5.3	2.6	58	70	**1LE1002-1BB2■-■■■■**	27	0.010	16
5.5	**6.3**	**132 S**	1450	36	IE1	84.7	85.7	84.9	0.82	11.2	2.3	5.7	2.7	64	76	**1LE1002-1CB0■-■■■■**	38	0.019	16
7.5	**8.6**	**132 M**	1450	49	IE1	86.0	86.9	86.3	0.82	15.2	2.6	6.6	3.1	64	76	**1LE1002-1CB2■-■■■■**	44	0.024	16
11	**12.6**	**160 M**	1460	72	IE1	87.6	88.0	86.6	0.82	22	2.3	6.4	3.1	65	77	**1LE1002-1DB2■-■■■■**	62	0.044	16
15	**17.3**	**160 L**	1460	98	IE1	88.7	89.3	88.3	0.82	30	2.5	7.0	3.4	65	77	**1LE1002-1DB4■-■■■■**	73	0.056	16
6-pole: 1000 rpm at 50 Hz, 1200 rpm at 60 Hz 1)																			
1.5	**1.75**	**100 L**	940	15	IE1	75.2	76.0	72.4	0.74	3.9	2.0	4.0	2.2	59	71	**1LE1002-1AC4■-■■■■**	19	0.0065	16
2.2	**2.55**	**112 M**	930	23	IE1	77.7	78.8	76.9	0.75	5.4	2.3	4.1	2.5	57	69	**1LE1002-1BC2■-■■■■**	25	0.0092	16
3	**3.45**	**132 S**	955	30	IE1	79.7	80.2	77.7	0.74	7.3	2.0	4.6	2.6	63	75	**1LE1002-1CC0■-■■■■**	34	0.017	16
4	**4.55**	**132 M**	950	40	IE1	81.4	82.9	82.1	0.76	9.3	2.1	4.7	2.5	63	75	**1LE1002-1CC2■-■■■■**	39	0.021	16
5.5	**6.3**	**132 M**	950	55	IE1	83.1	84.6	84.0	0.75	12.7	2.5	5.2	2.8	63	75	**1LE1002-1CC3■-■■■■**	48	0.027	16
7.5	**8.6**	**160 M**	970	74	IE1	84.7	85.4	85.0	0.73	17.5	2.1	5.5	2.9	67	79	**1LE1002-1DC2■-■■■■**	72	0.056	16
11	**12.6**	**160 L**	965	109	IE1	86.4	86.4	85.4	0.77	24	1.9	5.9	2.7	67	79	**1LE1002-1DC4■-■■■■**	92	0.078	16
8-pole: 750 rpm at 50 Hz, 900 rpm at 60 Hz 1)																			
0.75	**0.86**	**100 L**	705	10	–	62.6	60.8	53.9	0.62	3.0	1.9	3.0	2.2	60	72	**1LE1002-1AD4■-■■■■**	17	0.0056	16
1.1	**1.27**	**100 L**	705	15	–	65.5	64.2	60.0	0.63	3.9	2.0	3.2	2.3	60	72	**1LE1002-1AD5■-■■■■**	22	0.0078	16
1.5	**1.75**	**112 M**	700	20	–	71.6	72.2	68.5	0.65	4.7	1.6	3.3	1.9	63	75	**1LE1002-1BD2■-■■■■**	29	0.0094	16
2.2	**2.55**	**132 S**	715	29	–	76.8	77.4	75.2	0.66	6.3	1.7	3.9	2.4	63	75	**1LE1002-1CD0■-■■■■**	37	0.019	16
3	**3.45**	**132 M**	715	40	–	76.6	77.8	75.8	0.66	8.6	1.8	3.9	2.2	63	75	**1LE1002-1CD2■-■■■■**	44	0.024	16
4	**4.55**	**160 M**	720	53	–	78.3	78.5	75.6	0.69	10.7	1.7	3.8	2.3	63	75	**1LE1002-1DD2■-■■■■**	60	0.044	16
5.5	**6.3**	**160 M**	720	73	–	81.7	82.5	81.4	0.70	13.9	1.6	4.0	2.2	63	75	**1LE1002-1DD3■-■■■■**	72	0.056	16
7.5	**8.6**	**160 L**	715	100	–	83.5	84.5	83.6	0.70	18.5	1.7	3.8	2.2	63	75	**1LE1002-1DD4■-■■■■**	91	0.077	16

Voltages				No. of poles	Frame size	Motor type	Version				Order code(s)
50 Hz	230 VΔ/400 VY	60 Hz 1)	460 VY	2, 4, 6, 8	100 L ... 160 L	1LE1002-1A ... -1D	**Standard**	**2**	**2**		–
50 Hz	400 VΔ/690 VY	60 Hz 1)	460 VΔ	2, 4, 6, 8	100 L ... 160 L	1LE1002-1A ... -1D	**Standard**	**3**	**4**		–
50 Hz	500 VY			2, 4, 6, 8	100 L ... 160 L	1LE1002-1A ... -1D	Without add. charge	**2**	**7**		–
50 Hz	500 VΔ			2, 4, 6, 8	100 L ... 160 L	1LE1002-1A ... -1D	Without add. charge	**4**	**0**		–
Further voltages 1)			For price information, code numbers, order codes and descriptions, see from Page 2/57					**9**	**0**		. . .

Types of construction		No. of poles	Frame size	Motor type	Version			Order code(s)
Without flange	IM B3 2)	2, 4, 6, 8	100 L ... 160 L	1LE1002-1A ... -1D	**Standard**		**A**	–
With flange	IM B5 2)	2, 4, 6, 8	100 L ... 160 L	1LE1002-1A ... -1D	With additional charge		**F**	–
With standard flange	IM B14 2)	2, 4, 6, 8	100 L ... 160 L	1LE1002-1A ... -1D	With additional charge		**K**	–
Further types of construction	For price information, code letters and descriptions, see from Page 2/62						■	. . .

Motor protection	No. of poles	Frame size	Motor type	Version			Order code(s)
Without	2, 4, 6, 8	100 L ... 160 L	1LE1002-1A ... -1D	**Standard**		**A**	–
PTC thermistor with 3 temperature sensors	2, 4, 6, 8	100 L ... 160 L	1LE1002-1A ... -1D	With additional charge		**B**	–
Further motor protection	For price information, code letters and descriptions, see from Page 2/70					■	. . .

Terminal box position	No. of poles	Frame size	Motor type	Version		Order code(s)
Terminal box at top	2, 4, 6, 8	100 L ... 160 L	1LE1002-1A ... -1D	**Standard**	**4**	–
Further terminal box positions	For price information, code numbers and descriptions, see from Page 2/72					

Special versions	No. of poles	Frame size	Motor type		Order code(s)
Forced-air cooled motors without ext. fan/fan cover (IC416)		100 L ... 160 L	1LE1002-1A ... -1D	**1LE1002-. . . . ■-■■■■-Z**	**F90** +. . .+. . .+. . .
Options	For price information, order codes and descriptions, see from Page 2/74			**1LE1002-. . . . ■-■■■■-Z**	. . .+. . .+. . .+. . .

1) Operating values at rated output for 60 Hz are stored in the Drive Technology (DT) Configurator.

2) Types derived from IM B3 (IM B6/7/8, IM V6 and IM V5), from IM B5 (IM V3 and IM V1) and from IM B14 (IM V19 and IM V18) are possible, provided that no requirements exist for condensation drainage holes (**H03**) and stamping of the type on the rating plate. The basic type IM B3, IM B5 or IM B14 is stamped as standard on the rating plate. When ordering with condensation drainage holes (**H03**), the type must be specified.

© Siemens AG 2015

IE1 Please note minimum legal efficiencies in the European Economic Area!

Selection and ordering data

P_{rated}, 50 Hz	P_{rated}, 60 Hz 1)	Frame size	Operating values at rated output: n_{rated}, 50 Hz	T_{rated}, 50 Hz	IE class	η_{rated}, 50 Hz, 4/4	η_{rated}, 50 Hz, 3/4	η_{rated}, 50 Hz, 2/4	cos φ_{rated}, 50 Hz, 4/4	I_{rated}, 50 Hz, 400 V	T_{LR}/T_{rated}, 50 Hz	I_{LR}/I_{rated}, 50 Hz	T_B/T_{rated}, 50 Hz	L_{pfA}, 50 Hz	L_{WA}, 50 Hz	**Aluminum series 1LE1002** – *IE1 version in accordance with IEC 60034-30 with increased output* Article No.	$m_{IM\ B3}$	J	Torque class
kW	kW	FS	rpm	Nm		%	%	%		A				dB(A)	dB(A)		kg	kgm²	CL
• **Cooling: self-ventilated (IC411)** • **Efficiency: IE1 Standard Efficiency, (SF) 1.1** • **Insulation: thermal class 155 (temperature class F), IP55 degree of protection, utilization in accordance with thermal class 130 (temperature class B)**																			
2-pole: 3000 rpm at 50 Hz, 3600 rpm at 60 Hz 1)																			
4	**4.55**	**100 L**	2850	13	IE1	83.1	84.8	84.5	0.85	8.2	4.5	7.0	4.1	67	79	**1LE1002-1AA6■-■■■■**	25	0.0044	16
5.5	**6.3**	**112 M**	2935	18	IE1	84.7	85.5	84.7	0.86	10.9	2.9	7.5	3.8	69	81	**1LE1002-1BA6■-■■■■**	31	0.0085	16
11	**12.6**	**132 M**	2920	36	IE1	87.6	89.0	88.8	0.90	20	2.8	7.5	3.7	68	80	**1LE1002-1CA6■-■■■■**	53	0.022	16
22	**24.5**	**160 L**	2935	72	IE1	89.9	90.6	90.3	0.90	39	2.8	7.5	3.2	70	82	**1LE1002-1DA6■-■■■■**	85	0.049	16
4-pole: 1500 rpm at 50 Hz, 1800 rpm at 60 Hz 1)																			
4	**4.55**	**100 L**	1435	27	IE1	83.1	83.8	82.8	0.81	8.6	3.2	6.5	3.1	60	72	**1LE1002-1AB6■-■■■■**	27	0.010	16
5.5	**6.3**	**112 M**	1420	37	IE1	84.7	86.5	86.4	0.81	11.6	3.0	5.8	3.1	58	70	**1LE1002-1BB6■-■■■■**	33	0.012	16
11	**12.6**	**132 M**	1450	72	IE1	87.6	88.8	88.7	0.84	21.5	2.5	7.2	3.0	64	76	**1LE1002-1CB6■-■■■■**	58	0.033	16
18.5	**21.3**	**160 L**	1460	121	IE1	89.3	90.4	89.9	0.85	35	2.7	7.2	3.2	65	77	**1LE1002-1DB6■-■■■■**	85	0.068	16
6-pole: 1000 rpm at 50 Hz, 1200 rpm at 60 Hz 1)																			
2.2	**2.55**	**100 L**	930	22	IE1	77.7	78.5	77.5	0.78	5.2	2.0	4.0	2.2	59	71	**1LE1002-1AC6■-■■■■**	24	0.0084	16
3	**3.45**	**112 M**	945	30	IE1	79.7	79.7	76.6	0.72	7.5	2.5	4.6	2.6	57	69	**1LE1002-1BC6■-■■■■**	32	0.013	16
7.5	**8.6**	**132 M**	950	75	IE1	84.7	84.2	82.6	0.74	17.3	2.8	5.3	3.0	63	75	**1LE1002-1CC6■-■■■■**	54	0.032	16
15	**17.3**	**160 L**	965	148	IE1	87.7	88.2	86.8	0.75	33	2.9	6.0	3.4	67	79	**1LE1002-1DC6■-■■■■**	109	0.094	16

Voltages				No. of poles	Frame size	Motor type	Version				Order code(s)
50 Hz	230 VΔ/400 VY	60 Hz 1)	460 VY	2, 4, 6	100 L ... 160 L	1LE1002-1A ... -1D	**Standard**	**2**	**2**		–
50 Hz	400 VΔ/690 VY	60 Hz 1)	460 VΔ	2, 4, 6	100 L ... 160 L	1LE1002-1A ... -1D	**Standard**	**3**	**4**		–
50 Hz	500 VY			2, 4, 6	100 L ... 160 L	1LE1002-1A ... -1D	Without add. charge	**2**	**7**		–
50 Hz	500 VΔ			2, 4, 6	100 L ... 160 L	1LE1002-1A ... -1D	Without add. charge	**4**	**0**		–
Further voltages 1)			For price information, code numbers, order codes and descriptions, see from Page 2/57					**9**	**0**		. . .
Types of construction				No. of poles	Frame size	Motor type	Version				Order code(s)
Without flange		IM B3 2)		2, 4, 6	100 L ... 160 L	1LE1002-1A ... -1D	**Standard**			**A**	–
With flange		IM B5 2)		2, 4, 6	100 L ... 160 L	1LE1002-1A ... -1D	With additional charge			**F**	–
With standard flange		IM B14 2)		2, 4, 6	100 L ... 160 L	1LE1002-1A ... -1D	With additional charge			**K**	–
Further types of construction			For price information, code letters and descriptions, see from Page 2/62							■	. . .
Motor protection				No. of poles	Frame size	Motor type	Version				Order code(s)
Without				2, 4, 6	100 L ... 160 L	1LE1002-1A ... -1D	**Standard**			**A**	–
PTC thermistor with 3 temperature sensors				2, 4, 6	100 L ... 160 L	1LE1002-1A ... -1D	With additional charge			**B**	–
Further motor protection			For price information, code letters and descriptions, see from Page 2/70							■	. . .
Terminal box position				No. of poles	Frame size	Motor type	Version				Order code(s)
Terminal box at top				2, 4, 6	100 L ... 160 L	1LE1002-1A ... -1D	**Standard**				–
Further terminal box positions			For price information, code numbers and descriptions, see from Page 2/72							**4**	
Special versions				No. of poles	Frame size	Motor type					Order code(s)
Options			For price information, order codes and descriptions, see from Page 2/74				**1LE1002-. . . . ■-■■■■-Z**				. . .+. . .+. . .+. . .

1) Operating values at rated output for 60 Hz are stored in the Drive Technology (DT) Configurator.

2) Types derived from IM B3 (IM B6/7/8, IM V6 and IM V5), from IM B5 (IM V3 and IM V1) and from IM B14 (IM V19 and IM V18) are possible, provided that no requirements exist for condensation drainage holes (**H03**) and stamping of the type on the rating plate. The basic type IM B3, IM B5 or IM B14 is stamped as standard on the rating plate. When ordering with condensation drainage holes (**H03**), the type must be specified.

© Siemens AG 2015

NEMA Energy Efficient MG1 motors, Table 12-11

SIMOTICS GP 1LE1 Standard Motors – Eagle Line

Self-ventilated or forced-air cooled motors · Aluminum series 1LE1021

Selection and ordering data

P_{rated}, 50 Hz	P_{rated}, 60 Hz	Frame size	Operating values at rated output: n_{rated}, 60 Hz	T_{rated}, 60 Hz	EISA CC No. CC032A	η_{rated}, 60 Hz, 4/4	η_{rated}, 60 Hz, 3/4	η_{rated}, 60 Hz, 2/4	cos φ_{rated}, 60 Hz, 4/4	I_{rated}, 60 Hz, 460 V	T_{LR}/T_{rated}, 60 Hz	I_{LR}/I_{rated}, 60 Hz	T_B/T_{rated}, 60 Hz	L_{pfA}, 60 Hz	L_{WA}, 60 Hz	Aluminum series 1LE1021 – *NEMA Energy Efficient version* Article No.	$m_{IM\ B3}$	J	Torque class
kW	hp	FS	rpm	Nm		%	%	%		A				dB(A)	dB(A)	▲ New	kg	kgm²	CL
• Cooling: self-ventilated (IC411) or with order code F90 forced-air cooled without external fan and fan cover (IC416)																			
• Efficiency: NEMA Energy Efficient, UL, CSA and service factor (SF) 1.15 – for operation in the USA and Canada, not admissible for export to Mexico																			
• Insulation: thermal class 155 (temperature class F), IP55 degree of protection, utilization in accordance with thermal class 130 (temperature class B)																			
2-pole: 3000 rpm at 50 Hz, 3600 rpm at 60 Hz																			
0.75	**1**	**80 M**	3445	2.1	–	75.5	75.5	72.5	0.83	1.5	2.1	6	3	64	75	**1LE1021-0DA2■-■■■■**	9	0.0008	16
1.1	**1.5**	**80 M**	3465	3	–	82.5	82.5	81.5	0.82	2.05	3.1	7.2	3.8	64	75	**1LE1021-0DA3■-■■■■**	11	0.0011	16
1.5	**2**	**90 S**	3505	4.1	✓	84	84	83	0.82	2.75	3.1	8.5	4.5	69	81	**1LE1021-0EA0■-■■■■**	13	0.0017	16
2.2	**3**	**90 L**	3510	6	✓	85.5	85.5	84.5	0.83	3.9	3	8.7	4.6	69	81	**1LE1021-0EA4■-■■■■**	15	0.0021	16
3	**4**	**100 L**	3520	8.1	–	87.5	87.5	86.5	0.83	5.2	2.6	8.1	3.8	71	83	**1LE1021-1AA4■-■■■■**	21	0.0044	16
3.7	**5**	**112 M**	3555	9.9	✓	87.5	86.9	84.6	0.83	6.4	2.7	9.9	4.5	73	85	**1LE1021-1BA2■-■■■■**	27	0.0092	16
5.5	**7.5**	**132 S**	3555	15	✓	88.5	88.5	87.5	0.86	9.1	2	7.6	3.3	72	84	**1LE1021-1CA0■-■■■■**	39	0.02	16
7.5	**10**	**132 S**	3560	20	✓	89.5	89.5	88.5	0.87	12.1	2.3	8.2	3.6	72	84	**1LE1021-1CA1■-■■■■**	43	0.024	16
11	**15**	**160 M**	3560	30	✓	90.2	90.2	89.2	0.86	17.8	2.4	8.2	3.6	77	89	**1LE1021-1DA2■-■■■■**	67	0.045	16
15	**20**	**160 M**	3565	40	✓	90.2	90.2	89.2	0.87	24	2.8	8.4	3.9	77	89	**1LE1021-1DA3■-■■■■**	75	0.053	16
18.5	**25**	**160 L**	3565	50	✓	91	91	90	0.87	29.5	3.3	8.9	4.1	77	89	**1LE1021-1DA4■-■■■■**	84	0.061	16
22	**30**	**180 M**	3550	59	✓	91	91	89.6	0.86	35.5	3	8.4	4.1	81	88	▲ **1LE1021-1EA2■-■■■■**	123	0.069	16
30	**40**	**200 L**	3565	80	✓	91.7	91.2	89.6	0.86	47.5	2.9	7.7	3.8	82	89	▲ **1LE1021-2AA4■-■■■■**	158	0.13	16
37	**50**	**200 L**	3565	99	✓	92.4	92.1	91	0.87	58	3.3	8.1	3.8	82	89	▲ **1LE1021-2AA5■-■■■■**	178	0.15	16

Voltages (≤ 600 V) [1]				No. of poles	Frame size	Motor type	Version				Order code(s)
50 Hz	230 VΔ/400 VY	60 Hz	460 VY	2	80 M ... 200 L	1LE1021-0D ... -2A	**Standard**	**2**	**2**		–
50 Hz	400 VΔ	60 Hz	460 VΔ	2	80 M ... 200 L	1LE1021-0D ... -2A	**Standard**	**3**	**4**		–
50 Hz	500 VY			2	80 M ... 200 L	1LE1021-0D ... -2A	Without add. charge	**2**	**7**		–
50 Hz	500 VΔ			2	80 M ... 200 L	1LE1021-0D ... -2A	Without add. charge	**4**	**0**		–
Further voltages			For price information, code numbers, order codes and descriptions, see from Page 2/57					**9**	**0**		. . .
Types of construction [2]				No. of poles	Frame size	Motor type	Version				Order code(s)
With flange		IM B5 [3]		2	80 M ... 200 L	1LE1021-0D ... -2A	With additional charge			**F**	–
With standard flange		IM B14 [3]		2	80 M ... 160 L	1LE1021-0D ... -2A	With additional charge			**K**	–
Further types of construction			For price information, code letters and descriptions, see from Page 2/62							■	. . .
Motor protection				No. of poles	Frame size	Motor type	Version				Order code(s)
Without				2	80 M ... 200 L	1LE1021-0D ... -2A	**Standard**			**A**	–
PTC thermistor with 3 temperature sensors				2	80 M ... 200 L	1LE1021-0D ... -2A	With additional charge			**B**	–
Further motor protection			For price information, code letters and descriptions, see from Page 2/70							■	. . .
Terminal box position				No. of poles	Frame size	Motor type	Version				Order code(s)
Terminal box at top				2	80 M ... 200 L	1LE1021-0D ... -2A	**Standard**			**4**	–
Further terminal box positions			For price information, code numbers and descriptions, see from Page 2/72								
Special versions				No. of poles	Frame size	Motor type					Order code(s)
Forced-air cooled motors without ext. fan/fan cover (IC416)				2	80 M ... 200 L	1LE1021-0D ... -2A	**1LE1021-. . . . ■-■■■■-Z**				**F90 +. . .+. . .+. . .**
Options			For price information, order codes and descriptions, see from Page 2/74				**1LE1021-. . . . ■-■■■■-Z**				. . .+. . .+. . .+. . .

– Not required
✓ Available

[1] Operating voltages only ≤ 600 V admissible in accordance with MG1 Table 12-11.

[2] Types of construction with feet are not possible for 2-pole, 4-pole and 6-pole motors ≤ 200 hp in accordance with MG1 Table 12-11.

[3] Types derived from IM B5 (IM V3 and IM V1) and from IM B14 (IM V19 and IM V18) are possible, provided that no requirements exist for condensation drainage holes (**H03**) and stamping of the type on the rating plate. The basic type IM B5 or IM B14 is stamped as standard on the rating plate. When ordering with condensation drainage holes (**H03**), the type must be specified.

© Siemens AG 2015

Selection and ordering data (continued)

P_{rated}, 50 Hz	P_{rated}, 60 Hz	Frame size	Operating values at rated output: n_{rated}, 60 Hz	T_{rated}, 60 Hz	EISA CC No. CC032A	η_{rated}, 60 Hz, 4/4	η_{rated}, 60 Hz, 3/4	η_{rated}, 60 Hz, 2/4	cos φ_{rated}, 60 Hz, 4/4	I_{rated}, 60 Hz, 460 V	T_{LR}/T_{rated}, 60 Hz	I_{LR}/I_{rated}, 60 Hz	T_B/T_{rated}, 60 Hz	L_{pfA}, 60 Hz	L_{WA}, 60 Hz	Aluminum series 1LE1021 – *NEMA Energy Efficient version* Article No.	$m_{IM\ B3}$	J	Torque class
kW	hp	FS	rpm	Nm		%	%	%		A				dB(A)	dB(A)	▲ New	kg	kgm²	CL
• Cooling: self-ventilated (IC411) or with order code F90 forced-air cooled without external fan and fan cover (IC416) • Efficiency: NEMA Energy Efficient, UL, CSA and service factor (SF) 1.15 – for operation in the USA and Canada, not admissible for export to Mexico • Insulation: thermal class 155 (temperature class F), IP55 degree of protection, utilization in accordance with thermal class 130 (temperature class B)																			
4-pole: 1500 rpm at 50 Hz, 1800 rpm at 60 Hz																			
0.55	0.75	80 M	1750	3	–	80	80	79	0.74	1.17	2.4	5.7	3.3	55	66	1LE1021-0DB2■-■■■■	10	0.0017	16
0.75	1	80 M	1750	4.1	–	82.5	82.5	81.5	0.72	1.58	2.5	6.8	3.8	55	66	1LE1021-0DB3■-■■■■	11	0.0021	16
1.1	1.5	90 S	1740	6	✓	84	84	83	0.74	2.2	2.7	7	3.6	58	70	1LE1021-0EB0■-■■■■	13	0.0028	16
1.5	2	90 L	1745	8.2	✓	84	84	83	0.75	3	2.9	7.5	4	58	70	1LE1021-0EB4■-■■■■	16	0.0036	16
2.2	3	100 L	1760	12	–	87.5	87.5	86.5	0.78	4.05	2.5	8.1	3.9	62	74	1LE1021-1AB4■-■■■■	21	0.0086	16
3	4	100 L	1765	16	–	87.5	87.5	86.5	0.79	5.4	2.4	8.3	3.7	62	74	1LE1021-1AB5■-■■■■	25	0.011	16
3.7	5	112 M	1770	20	✓	87.5	87.5	86.5	0.77	6.9	3	8.7	4	62	74	1LE1021-1BB2■-■■■■	29	0.014	16
5.5	7.5	132 S	1770	30	✓	89.5	89.5	88.5	0.78	9.9	2.6	8	3.3	68	80	1LE1021-1CB0■-■■■■	42	0.027	16
7.5	10	132 M	1770	40	✓	89.5	89.5	88.5	0.82	12.8	2.7	8	3.4	68	80	1LE1021-1CB2■-■■■■	49	0.034	16
11	15	160 M	1775	59	✓	91	91	90	0.84	18.1	2.5	7.7	3.2	69	81	1LE1021-1DB2■-■■■■	71	0.065	16
15	20	160 L	1780	80	✓	91	91	90	0.84	24.5	2.6	8.5	3.4	69	81	1LE1021-1DB4■-■■■■	83	0.083	16
18.5	25	180 M	1770	100	✓	92.4	92.6	91.8	0.83	30.5	2.8	7.7	3.9	64	77	▲ 1LE1021-1EB2■-■■■■	128	0.12	16
22	30	180 L	1770	119	✓	92.4	92.5	91.8	0.83	36	3	8.4	3.9	72	79	▲ 1LE1021-1EB4■-■■■■	132	0.13	16
30	40	200 L	1778	161	✓	93	92.9	92.2	0.84	48	3.2	8.2	3.7	72	79	▲ 1LE1021-2AB5■-■■■■	173	0.2	16

Voltages (≤ 600 V) [1]				No. of poles	Frame size	Motor type	Version				Order code(s)
50 Hz	230 VΔ/400 VY	60 Hz	460 VY	4	80 M ... 200 L	1LE1021-0D ... -2A	**Standard**	2	2		–
50 Hz	400 VΔ	60 Hz	460 VΔ	4	80 M ... 200 L	1LE1021-0D ... -2A	**Standard**	3	4		–
50 Hz	500 VY			4	80 M ... 200 L	1LE1021-0D ... -2A	Without add. charge	2	7		–
50 Hz	500 VΔ			4	80 M ... 200 L	1LE1021-0D ... -2A	Without add. charge	4	0		–
Further voltages			For price information, code numbers, order codes and descriptions, see from Page 2/57					9	0		. . .
Types of construction [2]				No. of poles	Frame size	Motor type	Version				Order code(s)
With flange		IM B5 [3]		4	80 M ... 200 L	1LE1021-0D ... -2A	With additional charge			F	–
With standard flange		IM B14 [3]		4	80 M ... 160 L	1LE1021-0D ... -2A	With additional charge			K	–
Further types of construction			For price information, code letters and descriptions, see from Page 2/62							■	. . .
Motor protection				No. of poles	Frame size	Motor type	Version				Order code(s)
Without				4	80 M ... 200 L	1LE1021-0D ... -2A	**Standard**			A	–
PTC thermistor with 3 temperature sensors				4	80 M ... 200 L	1LE1021-0D ... -2A	With additional charge			B	–
Further motor protection			For price information, code letters and descriptions, see from Page 2/70							■	. . .
Terminal box position				No. of poles	Frame size	Motor type	Version				Order code(s)
Terminal box at top				4	80 M ... 200 L	1LE1021-0D ... -2A	**Standard**			4	–
Further terminal box positions			For price information, code numbers and descriptions, see from Page 2/72								
Special versions				No. of poles	Frame size	Motor type					Order code(s)
Forced-air cooled motors without ext. fan/fan cover (IC416)				4	80 M ... 200 L	1LE1021-0D ... -2A	1LE1021-. . . . ■-■■■■			-Z	F90 +. . .+. . .+. . .
Options			For price information, order codes and descriptions, see from Page 2/74				1LE1021-. . . . ■-■■■■			-Z	. . .+. . .+. . .+. . .

– Not required
✓ Available

1) Operating voltages only ≤ 600 V admissible in accordance with MG1 Table 12-11.

2) Types of construction with feet are not possible for 2-pole, 4-pole and 6-pole motors ≤ 200 hp in accordance with MG1 Table 12-11.

3) Types derived from IM B5 (IM V3 and IM V1) and from IM B14 (IM V19 and IM V18) are possible, provided that no requirements exist for condensation drainage holes (**H03**) and stamping of the type on the rating plate. The basic type IM B5 or IM B14 is stamped as standard on the rating plate. When ordering with condensation drainage holes (**H03**), the type must be specified.

© Siemens AG 2015

Selection and ordering data (continued)

P_{rated}, 50 Hz	P_{rated}, 60 Hz	Frame size	Operating values at rated output: n_{rated}, 60 Hz	T_{rated}, 60 Hz	EISA CC No. CC032A	η_{rated}, 60 Hz, 4/4	η_{rated}, 60 Hz, 3/4	η_{rated}, 60 Hz, 2/4	cos φ_{rated}, 60 Hz, 4/4	I_{rated}, 60 Hz, 460 V	T_{LR}/T_{rated}, 60 Hz	I_{LR}/I_{rated}, 60 Hz	T_B/T_{rated}, 60 Hz	L_{pfA}, 60 Hz	L_{WA}, 60 Hz	Aluminum series 1LE1021 – *NEMA Energy Efficient version* Article No.	$m_{IM\ B3}$	J	Torque class
kW	hp	FS	rpm	Nm		%	%	%		A				dB(A)	dB(A)	▲ New	kg	kgm²	CL
• Cooling: self-ventilated (IC411) or with order code F90 forced-air cooled without external fan and fan cover (IC416)																			
• Efficiency: NEMA Energy Efficient, UL, CSA and service factor (SF) 1.15 – for operation in the USA and Canada, not admissible for export to Mexico																			
• Insulation: thermal class 155 (temperature class F), IP55 degree of protection, utilization in accordance with thermal class 130 (temperature class B)																			
6-pole: 1000 rpm at 50 Hz, 1200 rpm at 60 Hz																			
0.37	**0.5**	**80 M**	1140	3.1	–	75.3	74.1	69.5	0.63	0.98	2.3	4.6	2.9	45	56	**1LE1021-0DC2■-■■■■**	9	0.0017	16
0.55	**0.75**	**80 M**	1135	4.6	–	77	77.5	74	0.61	1.47	2.9	5.2	3.6	45	56	**1LE1021-0DC3■-■■■■**	12	0.0025	16
0.75	**1**	**90 S**	1150	6.2	✓	80	80.5	78	0.68	1.73	1.9	4.7	2.6	46	58	**1LE1021-0EC0■-■■■■**	13	0.003	16
1.1	**1.5**	**100 L**	1175	8.9	–	85.5	85.4	83.4	0.73	2.2	2.1	6	3	62	74	**1LE1021-1AC3■-■■■■**	25	0.011	16
1.5	**2**	**100 L**	1175	12	–	86.5	86.3	84.2	0.69	3.15	2.2	6.4	3.2	62	74	**1LE1021-1AC4■-■■■■**	25	0.011	16
2.2	**3**	**112 M**	1170	18	✓	87.5	87.3	85.5	0.73	4.3	2.1	6.3	3.2	65	77	**1LE1021-1BC2■-■■■■**	29	0.014	16
3	**4**	**132 S**	1175	24	–	87.5	87.1	84.6	0.69	6.2	1.8	6	2.9	67	79	**1LE1021-1CC0■-■■■■**	38	0.024	13
3.7	**5**	**132 M**	1180	30	✓	87.5	87.5	85.8	0.71	7.5	1.9	6.2	3	67	79	**1LE1021-1CC2■-■■■■**	43	0.029	13
5.5	**7.5**	**132 M**	1175	45	✓	89.5	89.8	88.8	0.73	10.6	2.1	6.5	2.9	67	79	**1LE1021-1CC3■-■■■■**	52	0.037	16
7.5	**10**	**160 M**	1180	61	✓	89.5	89.6	88.4	0.73	14.4	2.1	5.4	2.5	70	82	**1LE1021-1DC2■-■■■■**	77	0.075	16
11	**15**	**160 L**	1180	89	✓	90.2	90.5	89.5	0.74	20.5	2.2	5.5	2.5	70	82	**1LE1021-1DC4■-■■■■**	93	0.098	16
15	**20**	**180 L**	1178	122	✓	90.2	90.2	89	0.77	27	2.8	6.9	3.4	60	73	▲ **1LE1021-1EC4■-■■■■**	121	0.17	16
18.5	**25**	**200 L**	1182	149	✓	91.7	92.1	91.5	0.81	31.5	2.6	6.7	3	66	79	▲ **1LE1021-2AC4■-■■■■**	151	0.25	16
22	**30**	**200 L**	1182	178	✓	91.7	92.1	91.5	0.81	37	3	7.4	3	66	79	▲ **1LE1021-2AC5■-■■■■**	173	0.3	16
8-pole: 750 rpm at 50 Hz, 900 rpm at 60 Hz																			
11	**15**	**180 L**	875	120	✓	88.5	88.8	87.7	0.69	22.5	2.6	5.6	2.9	78	85	▲ **1LE1021-1ED4■-■■■■**	122	0.195	13
15	**20**	**200 L**	875	164	✓	89.5	90.7	90.9	0.74	28.5	2.8	6.3	3.3	61	68	▲ **1LE1021-2AD5■-■■■■**	172	0.344	13

Voltages (≤ 600 V) [1]				No. of poles	Frame size	Motor type	Version					Order code(s)
50 Hz	230 VΔ/400 VY	60 Hz	460 VY	6, 8	80 M ... 200 L	1LE1021-0D ... -2A	**Standard**	**2**	**2**			–
50 Hz	400 VΔ	60 Hz	460 VΔ	6, 8	80 M ... 200 L	1LE1021-0D ... -2A	**Standard**	**3**	**4**			–
50 Hz	500 VY			6, 8	80 M ... 200 L	1LE1021-0D ... -2A	Without add. charge	**2**	**7**			–
50 Hz	500 VΔ			6, 8	80 M ... 200 L	1LE1021-0D ... -2A	Without add. charge	**4**	**0**			–
Further voltages			For price information, code numbers, order codes and descriptions, see from Page 2/57					**9**	**0**			. . .
Types of construction [2]				No. of poles	Frame size	Motor type	Version					Order code(s)
With flange		IM B5 [3]		6, 8	80 M ... 200 L	1LE1021-0D ... -2A	With additional charge			**F**		–
With standard flange		IM B14 [3]		6, 8	80 M ... 160 L	1LE1021-0D ... -2A	With additional charge			**K**		–
Further types of construction			For price information, code letters and descriptions, see from Page 2/62							**■**		. . .
Motor protection				No. of poles	Frame size	Motor type	Version					Order code(s)
Without				6, 8	80 M ... 200 L	1LE1021-0D ... -2A	**Standard**				**A**	–
PTC thermistor with 3 temperature sensors				6, 8	80 M ... 200 L	1LE1021-0D ... -2A	With additional charge				**B**	–
Further motor protection			For price information, code letters and descriptions, see from Page 2/70								**■**	. . .
Terminal box position				No. of poles	Frame size	Motor type	Version					Order code(s)
Terminal box at top				6, 8	80 M ... 200 L	1LE1021-0D ... -2A	**Standard**					**4** –
Further terminal box positions			For price information, code numbers and descriptions, see from Page 2/72									
Special versions				No. of poles	Frame size	Motor type						Order code(s)
Forced-air cooled motors without ext. fan/fan cover (IC416)				6, 8	100 L ... 200 L	1LE1021-0D ... -2A	**1LE1021-. . . . ■-■■■■-Z**					**F90** +. . .+. . .+. . .
Options			For price information, order codes and descriptions, see from Page 2/74				**1LE1021-. . . . ■-■■■■-Z**					. . .+. . .+. . .+. . .

– Not required
✓ Available

[1] Operating voltages only ≤ 600 V admissible in accordance with MG1 Table 12-11.

[2] Types of construction with feet are not possible for 2-pole, 4-pole and 6-pole motors ≤ 200 hp in accordance with MG1 Table 12-11.

[3] Types derived from IM B5 (IM V3 and IM V1) and from IM B14 (IM V19 and IM V18) are possible, provided that no requirements exist for condensation drainage holes (**H03**) and stamping of the type on the rating plate. The basic type IM B5 or IM B14 is stamped as standard on the rating plate. When ordering with condensation drainage holes (**H03**), the type must be specified.

© Siemens AG 2015

Selection and ordering data

P_{rated}, 50 Hz	P_{rated}, 60 Hz	Frame size	Operating values at rated output: n_{rated}, 60 Hz	T_{rated}, 60 Hz	EISA CC No. CC032A	η_{rated}, 60 Hz, 4/4	η_{rated}, 60 Hz, 3/4	η_{rated}, 60 Hz, 2/4	cos φ_{rated}, 60 Hz, 4/4	I_{rated}, 460 V	T_{LR}/T_{rated}, 60 Hz	I_{LR}/I_{rated}, 60 Hz	T_B/T_{rated}, 60 Hz	L_{pfA}, 60 Hz	L_{WA}, 60 Hz	Cast-iron series 1LE1521 – *Basic Line* 1LE1621 – *Performance Line* *NEMA Energy Efficient version* Article No.	$m_{IM\ B3}$	J	Torque class
kW	hp	FS	rpm	Nm		%	%	%		A				dB(A)	dB(A)		kg	kgm²	CL
• Cooling: self-ventilated (IC411) or with order code F90 forced-air cooled without external fan and fan cover (IC416)																			
• Efficiency: NEMA Energy Efficient, UL, CSA and service factor (SF) 1.15 – for operation in the USA and Canada, not admissible for export to Mexico																			
• Insulation: thermal class 155 (temperature class F), IP55 degree of protection, utilization in accordance with thermal class 130 (temperature class B)																			
2-pole: 3000 rpm at 50 Hz, 3600 rpm at 60 Hz																			
0.37	0.5	71 M	3410	1.0	–	72.0	71.2	67.6	0.77	0.84	2.9	5.1	3.0	57	68	1LE1 5 21-0CA2 ■-■■■■	11.5	0.00035	16
0.55	0.75	71 M	3420	1.5	–	74.0	73.3	69.2	0.76	1.23	3.4	5.4	3.4	57	68	1LE1 5 21-0CA3 ■-■■■■	13	0.00045	16
0.75	1	80 M	3445	2.1	–	75.5	75.5	72.5	0.83	1.5	2.1	6.0	3.0	64	75	1LE1 5 21-0DA2 ■-■■■■	16	0.0008	16
1.1	1.5	80 M	3465	3.0	–	82.5	82.5	81.5	0.82	2.05	3.1	7.2	3.8	64	75	1LE1 5 21-0DA3 ■-■■■■	18	0.0011	16
1.5	2	90 S	3505	4.1	✓	84.0	84.0	83.0	0.82	2.75	3.1	8.5	4.5	69	81	1LE1 5 21-0EA0 ■-■■■■	23	0.0017	16
2.2	3	90 L	3510	6.0	✓	85.5	85.5	84.5	0.83	3.9	3.0	8.7	4.6	69	81	1LE1 5 21-0EA4 ■-■■■■	25.5	0.0021	16
3	4	100 L	3520	8.1	–	87.5	87.5	86.5	0.83	5.2	2.6	8.1	3.8	71	83	1LE1 ■ 21-1AA4 ■-■■■■	32	0.0044	16
4	5	112 M	3555	9.9	✓	87.5	86.9	84.6	0.83	6.4	2.7	9.9	4.5	73	85	1LE1 ■ 21-1BA2 ■-■■■■	39	0.0092	16
5.5	7.5	132 S	3555	15	✓	88.5	88.5	87.5	0.86	9.1	2	7.6	3.3	72	84	1LE1 ■ 21-1CA0 ■-■■■■	57	0.02	16
7.5	10	132 S	3560	20	✓	89.5	89.5	88.5	0.87	12.1	2.3	8.2	3.6	72	84	1LE1 ■ 21-1CA1 ■-■■■■	61	0.024	16
11	15	160 M	3560	30	✓	90.2	90.2	89.2	0.86	17.8	2.4	8.2	3.6	77	89	1LE1 ■ 21-1DA2 ■-■■■■	96	0.045	16
15	20	160 M	3565	40	✓	90.2	90.2	89.2	0.87	24	2.8	8.4	3.9	77	89	1LE1 ■ 21-1DA3 ■-■■■■	104	0.053	16
18.5	25	160 L	3565	50	✓	91	91	90	0.87	29.5	3.3	8.9	4.1	77	89	1LE1 ■ 21-1DA4 ■-■■■■	113	0.061	16
22	30	180 M	3550	59	✓	91	91	89.6	0.86	35.5	3	8.4	4.1	81	88	1LE1 ■ 21-1EA2 ■-■■■■	145	0.069	16
30	40	200 L	3565	80	✓	91.7	91.2	89.6	0.86	47.5	2.9	7.7	3.8	82	89	1LE1 ■ 21-2AA4 ■-■■■■	200	0.13	16
37	50	200 L	3565	99	✓	92.4	92.1	91	0.87	58	3.3	8.1	3.8	82	89	1LE1 ■ 21-2AA5 ■-■■■■	225	0.15	16
45	60	225 M	3570	120	✓	93	92.7	91.3	0.88	69	3.1	8.7	3.8	77	90	1LE1 ■ 21-2BA2 ■-■■■■	295	0.23	16
55	75	250 M	3575	147	–	93	92.5	91	0.89	83	2.4	7.4	3.5	80	94	1LE1 ■ 21-2CA2 ■-■■■■	360	0.4	13
75	100	280 S	3580	200	–	93.6	92.9	91.1	0.87	116	2.8	7.7	3.5	81	95	1LE1 ■ 21-2DA0 ■-■■■■	490	0.71	13
90	125	280 M	3578	240	✓	94.5	94.2	93.1	0.88	136	2.7	7.9	3.4	81	95	1LE1 ■ 21-2DA2 ■-■■■■	530	0.83	13
110	150	315 S	3585	293	✓	94.5	94	92.5	0.9	162	2.6	7.9	3.3	82	96	1LE1 ■ 21-3AA0 ■-■■■■	720	1.3	13
132	175	315 M	3585	352	–	95	94.7	93.6	0.91	192	2.7	8.1	3.4	82	96	1LE1 ■ 21-3AA2 ■-■■■■	880	1.6	13
150	200	315 L	3585	400	✓	95	94.6	93.3	0.92	215	2.9	8.3	3.5	84	99	1LE1 ■ 21-3AA4 ■-■■■■	930	1.8	13
185	250	315 L	3585	493	✓	95.4	95.2	94.2	0.92	265	3.5	8.9	3.5	84	99	1LE1 ■ 21-3AA5 ■-■■■■	1130	2.2	13

	Relubrication	Motor protection	Fan cover	Bearing size	Liability for defects							
Basic Line	Optional (standard from FS 280 upwards)	Optional	Plastic	62 (63 from FS 280 upwards)	12 months	5						
Performance Line	Standard from FS 160 (optional for FS 100 to 132)	Standard PTC	Steel	63	36 months	6						

Voltages (≤ 600 V) [1]				No. of poles	Frame size	Motor type	Version						Order code(s)
50 Hz	230 VΔ/400 VY	60 Hz	460 VY	2	71 M ... 315 L	1LE1■21-0C ... -3A	**Standard**	2	2				–
50 Hz	400 VΔ	60 Hz	460 VΔ	2	71 M ... 315 L	1LE1■21-0C ... -3A	**Standard**	3	4				–
50 Hz	500 VY			2	71 M ... 315 L	1LE1■21-0C ... -3A	Without add. chrg.	2	7				–
50 Hz	500 VΔ			2	71 M ... 315 L	1LE1■21-0C ... -3A	Without add. chrg.	4	0				–
Further voltages		For price information, code numbers, order codes and descriptions, see from Page 2/60						9	0				. . .

Types of construction [2]			No. of poles	Frame size	Motor type	Version						Order code(s)
Without flange	IM B3 [3]		2	315 L > 200 hp	1LE1■21-3AA5	**Standard**				A		–
With flange	IM B5 [3]		2	71 M ... 315 M	1LE1■21-0C ... -3A	With additional charge				F		–
With standard flange	IM B14 [3]		2	71 M ... 160 L	1LE1■21-0C ... -1D	With additional charge				K		–
Further types of construction		For price information, code letters and descriptions, see from Page 2/66								■		. . .

Motor protection	Line	No. of poles	Frame size	Motor type	Version						Order code(s)
Without	Only possible for **Basic Line**	2	71 M ... 315 L	1LE1521-0C ... -3A	**Standard**				A		–
PTC thermistor with 3 temperature sensors	**Basic Line**	2	71 M ... 315 L	1LE1521-0C ... -3A	With additional charge				B		–
	Performance Line	2	71 M ... 315 L	1LE1621-0C ... -3A	**Standard**				B		–
Further motor protection	For price information, code letters and descriptions, see from Page 2/71								■		. . .

Terminal box position	No. of poles	Frame size	Motor type	Version						Order code(s)
Terminal box at top	2	71 M ... 315 L	1LE1■21-0C ... -3A	**Standard**					4	–
Further terminal box positions	For price information, code numbers and descriptions, see from Page 2/73									

Special versions	No. of poles	Frame size	Motor type							Order code(s)
Forced-air cooled motors without ext. fan/fan cover (IC 416)	2	71 M ... 315 L	1LE1■21-0C ... -3A	1LE1■21-. . . .	■	■■■■	-Z	F90+. . .+. . .+. . .		
Options	For price information, order codes and descriptions, see from Page 2/80			1LE1■21-. . . .	■	■■■■	-Z	. . .+. . .+. . .+. . .		

– Not required
✓ Available

1) Operating voltages only ≤ 600 V admissible in accordance with MG1 Table 12-11.
Parallel supply lines are required in the case of connection to ≤ 240 V.
For frame size 315 with connection to ≤ 240 V, due to the high current, a drilled, removable entry plate (Order code **R52**) or a larger terminal box (Order code **R50**) can be used. Order codes **R52** and **R50** alter the motor dimensions.

2) Types of construction with feet are not possible for 2-pole, 4-pole and 6-pole motors ≤ 200 hp in accordance with MG1 Table 12-11.

3) Types derived from IM B5 (IM V3 and IM V1) and from IM B14 (IM V19 and IM V18) are possible, provided that no requirement exists for stamping of the type on the rating plate. The basic type IM B5 or IM B14 is stamped as standard on the rating plate. If mounted in a different position, the position must be specified to ensure that the condensation drainage holes are positioned correctly.

© Siemens AG 2015

NEMA Energy Efficient MG1 motors, Table 12-11

SIMOTICS SD 1LE1 Standard Motors – Eagle Line

IE2

Self-ventilated or forced-air cooled motors · Cast-iron series 1LE1521/1LE1621 Basic/Performance Line

Selection and ordering data (continued)

P_{rated}, 50 Hz	P_{rated}, 60 Hz	Frame size	Operating values at rated output: n_{rated}, 60 Hz	T_{rated}, 60 Hz	EISA CC No. CC032A	η_{rated}, 60 Hz, 4/4	η_{rated}, 60 Hz, 3/4	η_{rated}, 60 Hz, 2/4	cos φ_{rated}, 60 Hz, 4/4	I_{rated}, 60 Hz, 460 V	T_{LR}/T_{rated}, 60 Hz	I_{LR}/I_{rated}, 60 Hz	T_B/T_{rated}, 60 Hz	L_{pfA}, 60 Hz	L_{WA}, 60 Hz	Cast-iron series 1LE1521 – *Basic Line* 1LE1621 – *Performance Line* *NEMA Energy Efficient version* Article No.	$m_{IM\ B3}$	J	Torque class
kW	hp	FS	rpm	Nm		%	%	%		A				dB(A)	dB(A)		kg	kgm²	CL
• Cooling: self-ventilated (IC411) or with order code F90 forced-air cooled without external fan and fan cover (IC416)																			
• Efficiency: NEMA Energy Efficient, UL, CSA and service factor (SF) 1.15 – for operation in the USA and Canada, not admissible for export to Mexico																			
• Insulation: thermal class 155 (temperature class F), IP55 degree of protection, utilization in accordance with thermal class 130 (temperature class B)																			
4-pole: 1500 rpm at 50 Hz, 1800 rpm at 60 Hz																			
0.25	0.33	71 M	1715	1.4	–	70.0	68.5	63.5	0.64	0.7	2.8	4.4	3.1	47	58	1LE1 5 21-0CB2 ■-■■■■	12	0.00076	16
0.37	0.5	71 M	1705	2.1	–	72.0	71.5	67.5	0.67	0.96	2.8	4.4	2.8	47	58	1LE1 5 21-0CB3 ■-■■■■	13	0.00095	16
0.55	0.75	80 M	1750	3.0	–	80.0	80.0	79.0	0.74	1.17	2.4	5.7	3.3	55	66	1LE1 5 21-0DB2 ■-■■■■	17	0.0017	16
0.75	1	80 M	1750	4.1	–	82.5	82.5	81.5	0.72	1.58	2.5	6.8	3.8	55	66	1LE1 5 21-0DB3 ■-■■■■	18.5	0.0021	16
1.1	1.5	90 S	1740	6.0	✓	84.0	84.0	83.0	0.74	2.2	2.7	7.0	3.6	58	70	1LE1 5 21-0EB0 ■-■■■■	23	0.0028	16
1.5	2	90 L	1745	8.2	✓	84.0	84.0	83.0	0.75	3.0	2.9	7.5	4.0	58	70	1LE1 5 21-0EB4 ■-■■■■	25	0.0036	16
2.2	3	100 L	1760	12	–	87.5	87.5	86.5	0.78	4.05	2.5	8.1	3.9	62	74	1LE1 ■ 21-1AB4 ■-■■■■	32	0.0086	16
3	4	100 L	1765	16	–	87.5	87.5	86.5	0.79	5.4	2.4	8.3	3.7	62	74	1LE1 ■ 21-1AB5 ■-■■■■	37	0.011	16
4	5	112 M	1770	20	✓	87.5	87.5	86.5	0.77	6.9	3	8.7	4	62	74	1LE1 ■ 21-1BB2 ■-■■■■	46	0.014	16
5.5	7.5	132 S	1770	30	✓	89.5	89.5	88.5	0.78	9.9	2.6	8	3.3	68	80	1LE1 ■ 21-1CB0 ■-■■■■	61	0.027	16
7.5	10	132 M	1770	40	✓	89.5	89.5	88.5	0.82	12.8	2.7	8	3.4	68	80	1LE1 ■ 21-1CB2 ■-■■■■	75	0.034	16
11	15	160 M	1775	59	✓	91	91	90	0.84	18.1	2.5	7.7	3.2	69	81	1LE1 ■ 21-1DB2 ■-■■■■	96	0.065	16
15	20	160 L	1780	80	✓	91	91	90	0.84	24.5	2.6	8.5	3.4	69	81	1LE1 ■ 21-1DB4 ■-■■■■	104	0.083	16
18.5	25	180 M	1770	100	✓	92.4	92.6	91.8	0.83	30.5	2.8	7.7	3.9	64	77	1LE1 ■ 21-1EB2 ■-■■■■	160	0.12	16
22	30	180 L	1770	119	✓	92.4	92.5	91.8	0.83	36	3	8.4	3.9	72	79	1LE1 ■ 21-1EB4 ■-■■■■	170	0.13	16
30	40	200 L	1778	161	✓	93	92.9	92.2	0.84	48	3.2	8.2	3.7	72	79	1LE1 ■ 21-2AB5 ■-■■■■	230	0.2	16
37	50	225 S	1778	199	–	93	93.2	92.5	0.87	57	2.7	7.2	3.3	69	82	1LE1 ■ 21-2BB0 ■-■■■■	280	0.42	16
45	60	225 M	1778	242	✓	93.6	93.8	93.1	0.86	70	3	7.6	3.5	69	83	1LE1 ■ 21-2BB2 ■-■■■■	305	0.46	16
55	75	250 M	1785	294	–	94.1	94.1	93.3	0.84	87	3.1	7.3	3.3	69	83	1LE1 ■ 21-2CB2 ■-■■■■	385	0.75	16
75	100	280 S	1788	401	–	94.5	94.3	93.2	0.87	114	2.7	7.6	3.2	79	92	1LE1 ■ 21-2DB0 ■-■■■■	550	1.3	16
90	125	280 M	1788	481	✓	94.5	94.3	93.3	0.87	137	2.9	8.1	34	78	92	1LE1 ■ 21-2DB2 ■-■■■■	570	1.4	16
110	150	315 S	1790	587	✓	95	94.8	93.8	0.86	169	3.1	8	3.3	79	93	1LE1 ■ 21-3AB0 ■-■■■■	740	2	16
132	175	315 M	1790	704	–	95	94.8	94	0.86	205	3.1	7.8	3.2	79	93	1LE1 ■ 21-3AB2 ■-■■■■	870	2.3	16
150	200	315 L	1790	800	✓	95	94.7	93.5	0.87	230	3.5	8.6	3.6	80	95	1LE1 ■ 21-3AB4 ■-■■■■	940	2.8	16
185	250	315 L	1792	986	✓	95	94.7	93.6	0.86	285	4.3	9.3	3.9	84	98	1LE1 ■ 21-3AB5 ■-■■■■	1140	3.5	16

	Relubrication	Motor protection	Fan cover	Bearing size	Liability for defects	
Basic Line	Optional (standard from FS 280 upwards)	Optional	Plastic	62 (63 from FS 280 upwards)	12 months	5
Performance Line	Standard from FS 160 (optional for FS 100 to 132)	Standard PTC	Steel	63	36 months	6

Voltages (≤ 600 V) [1]				No. of poles	Frame size	Motor type	Version				Order code(s)
50 Hz	230 VΔ/400 VY	60 Hz	460 VY	4	71 M ... 315 L	1LE1■21-0C … -3A	**Standard**	2	2		–
50 Hz	400 VΔ	60 Hz	460 VΔ	4	71 M ... 315 L	1LE1■21-0C … -3A	**Standard**	3	4		–
50 Hz	500 VY			4	71 M ... 315 L	1LE1■21-0C … -3A	Without add. chrg.	2	7		–
50 Hz	500 VΔ			4	71 M ... 315 L	1LE1■21-0C … -3A	Without add. chrg.	4	0		–
Further voltages		For price information, code numbers, order codes and descriptions, see from Page 2/60						9	0		. . .

Types of construction [2]			No. of poles	Frame size	Motor type	Version			Order code(s)
Without flange	IM B3 [3]		4	315 L > 200 hp	1LE1■21-3AB5	**Standard**	A		–
With flange	IM B5 [3]		4	71 M ... 315 M	1LE1■21-0C … -3A	With additional charge	F		–
With standard flange	IM B14 [3]		4	71 M ... 160 L	1LE1■21-0C … -1D	With additional charge	K		–
Further types of construction		For price information, code letters and descriptions, see from Page 2/66					Z		. . .

Motor protection	Line	No. of poles	Frame size	Motor type	Version			Order code(s)
Without	Only possible for **Basic Line**	4	71 M ... 315 L	1LE1521-0C … -3A	**Standard**	A		–
PTC thermistor with 3 temperature sensors	**Basic Line**	4	71 M ... 315 L	1LE1521-0C … -3A	With additional charge	B		–
	Performance Line	4	71 M ... 315 L	1LE1621-0C … -3A	**Standard**	B		–
Further motor protection	For price information, code letters and descriptions, see from Page 2/71					Z		. . .

Terminal box position	No. of poles	Frame size	Motor type	Version			Order code(s)
Terminal box at top	4	71 M ... 315 L	1LE1■21-0C … -3A	**Standard**	4		–
Further terminal box positions	For price information, code numbers and descriptions, see from Page 2/73						

Special versions	No. of poles	Frame size	Motor type			Order code(s)
Forced-air cooled motors without ext. fan/fan cover (IC 416)	4	71 M ... 315 L	1LE1■21-0C … -3A	1LE1■21-. . . . ■-■■■■	-Z	F90+. . .+. . .+. . .
Options	For price information, order codes and descriptions, see from Page 2/80			1LE1■21-. . . . ■-■■■■	-Z	. . .+. . .+. . .+. . .

– Not required

✓ Available

1) Operating voltages only ≤ 600 V admissible in accordance with MG1 Table 12-11.
Parallel supply lines are required in the case of connection to ≤ 240 V.
For frame size 315 with connection to ≤ 240 V, due to the high current, a drilled, removable entry plate (Order code **R52**) or a larger terminal box (Order code **R50**) can be used. Order codes **R52** and **R50** alter the motor dimensions.

2) Types of construction with feet are not possible for 2-pole, 4-pole and 6-pole motors ≤ 200 hp in accordance with MG1 Table 12-11.

3) Types derived from IM B5 (IM V3 and IM V1) and from IM B14 (IM V19 and IM V18) are possible, provided that no requirement exists for stamping of the type on the rating plate. The basic type IM B5 or IM B14 is stamped as standard on the rating plate. If mounted in a different position, the position must be specified to ensure that the condensation drainage holes are positioned correctly.

© Siemens AG 2015

Selection and ordering data (continued)

P_{rated}, 50 Hz	P_{rated}, 60 Hz	Frame size	Operating values at rated output: n_{rated}, 60 Hz	T_{rated}, 60 Hz	EISA CC No. CC032A	η_{rated}, 60 Hz, 4/4	η_{rated}, 60 Hz, 3/4	η_{rated}, 60 Hz, 2/4	cos φ_{rated}, 60 Hz, 4/4	I_{rated}, 60 Hz, 460 V	T_{LR}/T_{rated}, 60 Hz	I_{LR}/I_{rated}, 60 Hz	T_B/T_{rated}, 60 Hz	L_{pfA}, 60 Hz	L_{WA}, 60 Hz	Cast-iron series 1LE1521 – *Basic Line* 1LE1621 – *Performance Line* *NEMA Energy Efficient version* Article No.	$m_{IM\ B3}$	J	Torque class
kW	hp	FS	rpm	Nm		%	%	%		A				dB(A)	dB(A)		kg	kgm²	CL
• Cooling: self-ventilated (IC411) or with order code F90 forced-air cooled without external fan and fan cover (IC416)																			
• Efficiency: NEMA Energy Efficient, UL, CSA and service factor (SF) 1.15 – for operation in the USA and Canada, not admissible for export to Mexico																			
• Insulation: thermal class 155 (temperature class F), IP55 degree of protection, utilization in accordance with thermal class 130 (temperature class B)																			
6-pole: 1000 rpm at 50 Hz, 1200 rpm at 60 Hz																			
0.18	**0.25**	**71 M**	1105	1.6	–	55.0	54.0	49.0	0.61	0.67	2.9	2.7	2.9	42	53	**1LE1 5 21-0CC2 ■-■■■■**	11.5	0.00080	16
0.25	**0.33**	**71 M**	1100	2.2	–	59.5	59.0	55.1	0.64	0.82	2.7	3.0	2.7	42	53	**1LE1 5 21-0CC3 ■-■■■■**	12.5	0.00100	16
0.37	**0.5**	**80 M**	1140	3.1	–	75.3	74.1	69.5	0.63	0.98	2.3	4.6	2.9	45	56	**1LE1 5 21-0DC2 ■-■■■■**	16.5	0.0017	16
0.55	**0.75**	**80 M**	1135	4.6	–	77.0	77.5	74.0	0.61	1.47	2.9	5.2	3.6	45	56	**1LE1 5 21-0DC3 ■-■■■■**	18.5	0.0025	16
0.75	**1**	**90 S**	1155	6.2	✓	80.0	80.5	78.0	0.68	1.98	2.2	5.3	3.0	46	58	**1LE1 5 21-0EC0 ■-■■■■**	26	0.0040	16
1.5	**2**	**100 L**	1175	12	–	86.5	86.3	84.2	0.69	3.15	2.2	6.4	3.2	62	74	**1LE1 ■ 21-1AC4 ■-■■■■**	36	0.011	16
2.2	**3**	**112 M**	1170	18	✓	87.5	87.3	85.5	0.73	4.3	2.1	6.3	3.2	65	77	**1LE1 ■ 21-1BC2 ■-■■■■**	41	0.014	16
3	**4**	**132 S**	1175	24	–	87.5	87.1	84.6	0.69	6.2	1.8	6	2.9	67	79	**1LE1 ■ 21-1CC0 ■-■■■■**	56	0.024	13
4	**5**	**132 M**	1180	30	✓	87.5	87.5	85.8	0.71	7.5	1.9	6.2	3	67	79	**1LE1 ■ 21-1CC2 ■-■■■■**	61	0.029	13
5.5	**7.5**	**132 M**	1175	45	✓	89.5	89.8	88.8	0.73	10.6	2.1	6.5	2.9	67	79	**1LE1 ■ 21-1CC3 ■-■■■■**	70	0.037	16
7.5	**10**	**160 M**	1180	61	✓	89.5	89.6	88.4	0.73	14.4	2.1	5.4	2.5	70	82	**1LE1 ■ 21-1DC2 ■-■■■■**	106	0.075	16
11	**15**	**160 L**	1180	89	✓	90.2	90.5	89.5	0.74	20.5	2.2	5.5	2.5	70	82	**1LE1 ■ 21-1DC4 ■-■■■■**	122	0.098	16
15	**20**	**180 L**	1178	122	✓	90.2	90.2	89	0.77	27	2.8	6.9	3.4	60	73	**1LE1 ■ 21-1EC4 ■-■■■■**	155	0.17	16
18.5	**25**	**200 L**	1182	149	✓	91.7	92.1	91.5	0.81	31.5	2.6	6.7	3	66	79	**1LE1 ■ 21-2AC4 ■-■■■■**	200	0.25	16
22	**30**	**200 L**	1182	178	✓	91.7	92.1	91.5	0.81	37	3	7.4	3	66	79	**1LE1 ■ 21-2AC5 ■-■■■■**	220	0.3	16
30	**40**	**225 M**	1182	242	✓	93	93.3	92.6	0.83	49	2.9	7	3.1	66	79	**1LE1 ■ 21-2BC2 ■-■■■■**	300	0.58	16
37	**50**	**250 M**	1185	298	–	93	93.3	92.6	0.83	60	3.3	7.3	2.8	66	79	**1LE1 ■ 21-2CC2 ■-■■■■**	370	0.86	16
45	**60**	**280 S**	1188	362	–	93.6	93.8	93.1	0.84	72	3.1	7.4	3	67	81	**1LE1 ■ 21-2DC0 ■-■■■■**	460	1.1	16
55	**75**	**280 M**	1188	442	–	93.6	93.9	93.4	0.85	87	3.1	7.2	2.9	67	81	**1LE1 ■ 21-2DC2 ■-■■■■**	510	1.37	16
75	**100**	**315 S**	1190	602	✓	94.1	94.1	93.2	0.83	121	2.7	7.5	3	67	82	**1LE1 ■ 21-3AC0 ■-■■■■**	660	2.1	16
90	**125**	**315 M**	1190	722	✓	94.1	94.4	93.5	0.84	143	2.9	7.6	3.1	68	83	**1LE1 ■ 21-3AC2 ■-■■■■**	730	2.5	16
110	**150**	**315 L**	1190	883	✓	95	95	94.6	0.85	171	3.3	8.1	3.2	69	84	**1LE1 ■ 21-3AC4 ■-■■■■**	940	3.6	16
132	**175**	**315 L**	1190	1059	–	95	95	94.4	0.85	205	3.7	9.2	3.6	69	84	**1LE1 ■ 21-3AC5 ■-■■■■**	990	4.02	16
150	**200**	**315 L**	1192	1202	✓	95	94.9	94.2	0.85	235	4.3	9.6	3.8	72	87	**1LE1 ■ 21-3AC6 ■-■■■■**	1160	4.7	16

	Relubrication	Motor protection	Fan cover	Bearing size	Liability for defects		
Basic Line	Optional (standard from FS 280 upwards)	Optional	Plastic	62 (63 from FS 280 upwards)	12 months	5	
Performance Line	Standard from FS 160 (optional for FS 100 to 132)	Standard PTC	Steel	63	36 months	6	

Voltages (≤ 600 V) [1]				No. of poles	Frame size	Motor type	Version					Order code(s)
50 Hz	230 VΔ/400 VY	60 Hz	460 VY	6	71 M ... 315 L	1LE1■21-0C ... -3A	**Standard**	2	2			–
50 Hz	400 VΔ	60 Hz	460 VΔ	6	71 M ... 315 L	1LE1■21-0C ... -3A	**Standard**	3	4			–
50 Hz	500 VY			6	71 M ... 315 L	1LE1■21-0C ... -3A	Without add. chrg.	2	7			–
50 Hz	500 VΔ			6	71 M ... 315 L	1LE1■21-0C ... -3A	Without add. chrg.	4	0			–
Further voltages		For price information, code numbers, order codes and descriptions, see from Page 2/60						9	0			. . .

Types of construction [2]			No. of poles	Frame size	Motor type	Version				Order code(s)
With flange	IM B5 [3]		6	71 M ... 315 M	1LE1■21-0C ... -3A	With additional charge	F			–
With standard flange	IM B14 [3]		6	71 M ... 160 L	1LE1■21-0C ... -1D	With additional charge	K			–
Further types of construction		For price information, code letters and descriptions, see from Page 2/66					Z			. . .

Motor protection	Line	No. of poles	Frame size	Motor type	Version				Order code(s)
Without	Only possible for **Basic Line**	6	71 M ... 315 L	1LE1521-0C ... -3A	**Standard**	A			–
PTC thermistor with 3 temperature sensors	**Basic Line**	6	71 M ... 315 L	1LE1521-0C ... -3A	With additional charge	B			–
	Performance Line	6	71 M ... 315 L	1LE1621-0C ... -3A	**Standard**	B			–
Further motor protection		For price information, code letters and descriptions, see from Page 2/71				Z			. . .

Terminal box position	No. of poles	Frame size	Motor type	Version				Order code(s)
Terminal box at top	6	71 M ... 315 L	1LE1■21-0C ... -3A	**Standard**	4			–
Further terminal box positions	For price information, code numbers and descriptions, see from Page 2/73							

Special versions	No. of poles	Frame size	Motor type					Order code(s)
Forced-air cooled motors without ext. fan/fan cover (IC 416)	6	71 M ... 315 L	1LE1■21-0C ... -3A	**1LE1■21-. . . .**	■-■■■■	-Z		**F90+. . .+. . .+. . .**
Options	For price information, order codes and descriptions, see from Page 2/80			**1LE1■21-. . . .**	■-■■■■	-Z		**. . .+. . .+. . .+. . .**

– Not required
✓ Available

[1] Operating voltages only ≤ 600 V admissible in accordance with MG1 Table 12-11.
Parallel supply lines are required in the case of connection to ≤ 240 V.
For frame size 315 with connection to ≤ 240 V, due to the high current, a drilled, removable entry plate (Order code **R52**) or a larger terminal box (Order code **R50**) can be used. Order codes **R52** and **R50** alter the motor dimensions.

[2] Types of construction with feet are not possible for 2-pole, 4-pole and 6-pole motors ≤ 200 hp in accordance with MG1 Table 12-11.

[3] Types derived from IM B5 (IM V3 and IM V1) and from IM B14 (IM V19 and IM V18) are possible, provided that no requirement exists for stamping of the type on the rating plate. The basic type IM B5 or IM B14 is stamped as standard on the rating plate. If mounted in a different position, the position must be specified to ensure that the condensation drainage holes are positioned correctly.

© Siemens AG 2015

Selection and ordering data (continued)

P_{rated}, 50 Hz	P_{rated}, 60 Hz	Frame size	Operating values at rated output: n_{rated}, 60 Hz	T_{rated}, 60 Hz	EISA CC No. CC032A	η_{rated}, 60 Hz, 4/4	η_{rated}, 60 Hz, 3/4	η_{rated}, 60 Hz, 2/4	cos φ_{rated}, 60 Hz, 4/4	I_{rated}, 60 Hz, 460 V	T_{LR}/T_{rated}, 60 Hz	I_{LR}/I_{rated}, 60 Hz	T_B/T_{rated}, 60 Hz	L_{pfA}, 60 Hz	L_{WA}, 60 Hz	Cast-iron series 1LE1521 – *Basic Line* 1LE1621 – *Performance Line* *NEMA Energy Efficient version* Article No.	$m_{IM\ B3}$	J	Torque class
kW	hp	FS	rpm	Nm		%	%	%		A				dB(A)	dB(A)		kg	kgm^2	CL
• Cooling: self-ventilated (IC411) or with order code F90 forced-air cooled without external fan and fan cover (IC416) • Efficiency: NEMA Energy Efficient, UL, CSA and service factor (SF) 1.15 – for operation in the USA and Canada, not admissible for export to Mexico • Insulation: thermal class 155 (temperature class F), IP55 degree of protection, utilization in accordance with thermal class 130 (temperature class B)																			
8-pole: 750 rpm at 50 Hz, 900 rpm at 60 Hz																			
11	**15**	**180 L**	875	120	✓	88.5	88.8	87.7	0.69	22.5	2.6	5.6	2.9	78	85	**1LE1 ■ 21-1ED4 ■-■■■■**	155	0.195	13
15	**20**	**200 L**	875	164	✓	89.5	90.7	90.9	0.74	28.5	2.8	6.3	3.3	61	68	**1LE1 ■ 21-2AD5 ■-■■■■**	220	0.344	13
18.5	**25**	**225 S**	885	200	✓	89.5	89.7	88.6	0.75	34.5	2.5	6.3	3.1	60	73	**1LE1 ■ 21-2BD0 ■-■■■■**	250	0.43	13
22	**30**	**225 M**	885	237	✓	91	91.3	90.4	0.78	39	2.5	6.4	3	61	74	**1LE1 ■ 21-2BD2 ■-■■■■**	270	0.5	13
30	**40**	**250 M**	885	323	✓	91	91.3	90.5	0.79	52	2.7	6.4	3	61	75	**1LE1 ■ 21-2CD2 ■-■■■■**	370	0.86	13
37	**50**	**280 S**	890	397	–	91.7	91.8	90.9	0.77	66	2.5	6.1	2.6	64	78	**1LE1 ■ 21-2DD0 ■-■■■■**	460	1.1	13
45	**60**	**280 M**	890	483	–	91.7	91.7	90.8	0.78	79	2.7	6.5	2.7	64	78	**1LE1 ■ 21-2DD2 ■-■■■■**	510	1.4	13
55	**75**	**315 S**	890	590	–	93	93	92.1	0.79	94	2.4	6.6	2.9	70	84	**1LE1 ■ 21-3AD0 ■-■■■■**	640	2	13
75	**100**	**315 M**	890	805	✓	93	93.3	92.9	0.8	127	2.5	6.7	3	73	87	**1LE1 ■ 21-3AD2 ■-■■■■**	720	2.5	13
90	**125**	**315 L**	890	966	✓	93.6	93.9	93.6	0.81	149	2.4	6.5	2.8	74	88	**1LE1 ■ 21-3AD4 ■-■■■■**	860	3.1	13
110	**150**	**315 L**	891	1179	✓	93.6	93.9	93.6	0.81	182	2.8	7.2	3.2	72	86	**1LE1 ■ 21-3AD5 ■-■■■■**	980	3.9	13
132	**175**	**315 L**	892	1413	–	94.1	94.2	93.7	0.8	220	3.2	7.9	3.7	78	93	**1LE1 ■ 21-3AD6 ■-■■■■**	1070	4.5	16

	Relubrication	Motor protection	Fan cover	Bearing size	Liability for defects	
Basic Line	Optional (standard from FS 280 upwards)	Optional	Plastic	62 (63 from FS 280 upwards)	12 months	5
Performance Line	Standard from FS 160 (optional for FS 100 to 132)	Standard PTC	Steel	63	36 months	6

Voltages (≤ 600 V) [1]				No. of poles	Frame size	Motor type	Version				Order code(s)
50 Hz	230 VΔ/400 VY	60 Hz	460 VY	8	180 L ... 315 L	1LE1■21-1E … -3A	**Standard**	2	2		–
50 Hz	400 VΔ	60 Hz	460 VΔ	8	180 L ... 315 L	1LE1■21-1E … -3A	**Standard**	3	4		–
50 Hz	500 VY			8	180 L ... 315 L	1LE1■21-1E … -3A	Without add. chrg.	2	7		–
50 Hz	500 VΔ			8	180 L ... 315 L	1LE1■21-1E … -3A	Without add. chrg.	4	0		–
Further voltages		For price information, code numbers, order codes and descriptions, see from Page 2/60						9	0		. . .

Types of construction [2]			No. of poles	Frame size	Motor type	Version				Order code(s)
With flange	IM B5 [3]		8	180 L ... 315 M	1LE1■21-1E … -3A	With additional charge			F	–
With standard flange	IM B14 [3]		8	180 L ... 160 L	1LE1■21-1E … -1D	With additional charge			K	–
Further types of construction		For price information, code letters and descriptions, see from Page 2/66							Z	. . .

Motor protection	Line	No. of poles	Frame size	Motor type	Version				Order code(s)
Without	Only possible for **Basic Line**	8	180 L ... 315 L	1LE1521-1E … -3A	**Standard**			A	–
PTC thermistor with 3 temperature sensors	**Basic Line**	8	180 L ... 315 L	1LE1521-1E … -3A	With additional charge			B	–
	Performance Line	8	180 L ... 315 L	1LE1621-1E … -3A	**Standard**			B	–
Further motor protection	For price information, code letters and descriptions, see from Page 2/71							Z	. . .

Terminal box position	No. of poles	Frame size	Motor type	Version				Order code(s)
Terminal box at top	8	180 L ... 315 L	1LE1■21-1E … -3A	**Standard**			4	–
Further terminal box positions	For price information, code numbers and descriptions, see from Page 2/73							

Special versions	No. of poles	Frame size	Motor type					Order code(s)
Forced-air cooled motors without ext. fan/fan cover (IC 416)	8	180 L... 315 L	1LE1■21-1E … -3A	**1LE1■21- . . . .**	■-■■■■	-Z		**F90+. . .+. . .+. . .**
Options	For price information, order codes and descriptions, see from Page 2/80			**1LE1■21- . . . .**	■-■■■■	-Z		**. . .+. . .+. . .+. . .**

– Not required
✓ Available

[1] Operating voltages only ≤ 600 V admissible in accordance with MG1 Table 12-11.
Parallel supply lines are required in the case of connection to ≤ 240 V.
For frame size 315 with connection to ≤ 240 V, due to the high current, a drilled, removable entry plate (Order code **R52**) or a larger terminal box (Order code **R50**) can be used. Order codes **R52** and **R50** alter the motor dimensions.

[2] Types of construction with feet are not possible for 2-pole, 4-pole and 6-pole motors ≤ 200 hp in accordance with MG1 Table 12-11.

[3] Types derived from IM B5 (IM V3 and IM V1) and from IM B14 (IM V19 and IM V18) are possible, provided that no requirement exists for stamping of the type on the rating plate. The basic type IM B5 or IM B14 is stamped as standard on the rating plate. If mounted in a different position, the position must be specified to ensure that the condensation drainage holes are positioned correctly.

© Siemens AG 2015

Selection and ordering data

P_{rated}, 50 Hz	P_{rated}, 60 Hz	Frame size	Operating values at rated output: n_{rated}, 60 Hz	T_{rated}, 60 Hz	EISA CC No. CC032A	η_{rated}, 60 Hz, 4/4	η_{rated}, 60 Hz, 3/4	η_{rated}, 60 Hz, 2/4	cos φ_{rated}, 60 Hz, 4/4	I_{rated}, 60 Hz, 460 V	T_{LR}/T_{rated}, 60 Hz	I_{LR}/I_{rated}, 60 Hz	T_B/T_{rated}, 60 Hz	L_{pfA}, 60 Hz	L_{WA}, 60 Hz	Aluminum series 1LE1023 – *NEMA Premium Efficient version* Article No.	$m_{IM\ B3}$	J	Torque class
kW	hp	FS	rpm	Nm		%	%	%		A				dB(A)	dB(A)	▲ New			CL
• Cooling: self-ventilated (IC411) or with order code F90 forced-air cooled without external fan and fan cover (IC416)																			
• Efficiency: NEMA Premium Efficient, UL, CSA and service factor (SF) 1.15 – for operation in the USA, Canada and Mexico																			
• Insulation: thermal class 155 (temperature class F), IP55 degree of protection, utilization in accordance with thermal class 130 (temperature class B)																			
2-pole: 3000 rpm at 50 Hz, 3600 rpm at 60 Hz																			
0.75	**1**	**80 M**	3480	2.1	–	77	78	76	0.84	1.46	3	7.1	3.6	64	75	**1LE1023-0DA2■-■■■■**	11	0.0011	16
1.1	**1.5**	**80 M**	3500	3	–	84	84	83	0.83	1.98	3.3	8.4	4.5	64	75	**1LE1023-0DA3■-■■■■**	12	0.0013	16
1.5	**2**	**90 S**	3525	4.1	✓	85.5	85	82.5	0.84	2.6	3.1	9.8	4.9	69	81	**1LE1023-0EA0■-■■■■**	15	0.0021	16
2.2	**3**	**90 L**	3530	6	✓	86.5	86.3	84.5	0.87	3.65	3	9.6	4.9	69	81	**1LE1023-0EA4■-■■■■**	19	0.0031	16
3	**4**	**100 L**	3525	8.1	–	88.5	88.5	87.5	0.87	4.9	3.8	9.7	5.5	71	83	**1LE1023-1AA4■-■■■■**	26	0.0054	16
4	**5**	**112 M**	3565	9.9	✓	88.5	88.5	87.5	0.87	6	3.8	10	5.6	73	85	**1LE1023-1BA2■-■■■■**	34	0.012	16
5.5	**7.5**	**132 S**	3555	15	✓	89.5	89.5	88.5	0.9	8.6	2.1	8.6	4.4	72	84	**1LE1023-1CA0■-■■■■**	43	0.024	16
7.5	**10**	**132 S**	3555	20	✓	90.2	90.2	89.2	0.91	11.5	2.4	9.5	4.7	72	84	**1LE1023-1CA1■-■■■■**	57	0.031	16
11	**15**	**160 M**	3560	30	✓	91	91	90	0.88	17.2	2.8	8.5	4.3	77	89	**1LE1023-1DA2■-■■■■**	75	0.053	16
15	**20**	**160 M**	3565	40	✓	91	91	90	0.86	24	3.1	9.7	4.8	77	89	**1LE1023-1DA3■-■■■■**	84	0.061	16
18.5	**25**	**160 L**	3560	50	✓	91.7	91.7	90.7	0.9	28	3.1	9.4	4.4	77	89	**1LE1023-1DA4■-■■■■**	94	0.068	16
22	**30**	**180 M**	3560	59	✓	91.7	91.4	90	0.89	34	2.8	8.3	3.9	78	85	▲ **1LE1023-1EA2■-■■■■**	129	0.08	16
30	**40**	**200 L**	3560	80	✓	92.4	92.2	91.4	0.87	47	2.9	7.6	3.6	78	86	▲ **1LE1023-2AA4■-■■■■**	173	0.134	16
37	**50**	**200 L**	3560	99	✓	93	92.8	91.6	0.88	57	2.8	7.5	3.6	79	86	▲ **1LE1023-2AA5■-■■■■**	194	0.158	16
4-pole: 1500 rpm at 50 Hz, 1800 rpm at 60 Hz																			
0.55	**0.75**	**80 M**	1750	3	–	82.5	82.2	79.4	0.74	1.13	2.7	6.9	3.8	55	66	**1LE1023-0DB2■-■■■■**	11	0.0021	16
0.75	**1**	**80 M**	1760	4.1	–	85.5	84.5	81	0.71	1.55	3.1	8.3	4.7	55	66	**1LE1023-0DB3■-■■■■**	14	0.0029	16
1.1	**1.5**	**90 S**	1750	6	✓	86.5	86.3	84.1	0.75	2.15	3.4	8.2	4.4	58	70	**1LE1023-0EB0■-■■■■**	16	0.0036	16
1.5	**2**	**90 L**	1755	8.2	✓	86.5	87	85	0.77	2.85	3	8.4	4.3	58	70	**1LE1023-0EB4■-■■■■**	19	0.0049	16
2.2	**3**	**100 L**	1770	12	–	89.5	89.5	88.5	0.81	3.8	3.5	9.6	5.1	62	74	**1LE1023-1AB4■-■■■■**	30	0.014	16
3	**4**	**100 L**	1760	16	–	89.5	89.5	88.5	0.82	5.1	3.1	9.5	4.6	62	74	**1LE1023-1AB5■-■■■■**	30	0.014	16
4	**5**	**112 M**	1770	20	✓	89.5	89.5	88.5	0.8	6.5	2.9	8.2	4.3	62	74	**1LE1023-1BB2■-■■■■**	34	0.017	16
5.5	**7.5**	**132 S**	1780	30	✓	91.7	91.7	90.7	0.83	9.1	2.9	9.5	4.4	68	80	**1LE1023-1CB0■-■■■■**	64	0.046	16
7.5	**10**	**132 M**	1770	40	✓	91.7	91.7	90.7	0.83	12.4	2.7	9.6	4.2	68	80	**1LE1023-1CB2■-■■■■**	64	0.046	16
11	**15**	**160 M**	1775	59	✓	92.4	92.4	91.4	0.83	18	3	8.9	3.8	69	81	**1LE1023-1DB2■-■■■■**	83	0.083	16
15	**20**	**160 L**	1780	80	✓	93	93	91.5	0.81	25	2.9	9.5	4.3	69	81	**1LE1023-1DB4■-■■■■**	100	0.099	16
18.5	**25**	**180 M**	1775	100	✓	93.6	93.7	93.1	0.81	30.5	2.7	7.8	3.6	68	75	▲ **1LE1023-1EB2■-■■■■**	134	0.13	16
22	**30**	**180 L**	1775	118	✓	93.6	93.8	93.3	0.81	36.5	2.8	7.7	3.7	70	77	▲ **1LE1023-1EB4■-■■■■**	142	0.14	16
30	**40**	**200 L**	1778	161	✓	94.1	94.3	93.8	0.83	48	3	8.1	3.5	67	74	▲ **1LE1023-2AB5■-■■■■**	189	0.22	16

Voltages (≤ 600 V) [1]				No. of poles	Frame size	Motor type	Version					Order code(s)
50 Hz	230 VΔ/400 VY	60 Hz	460 VY	2, 4	80 M ... 200 L	1LE1023-0D ... -2A	**Standard**	2	2			–
50 Hz	400 VΔ	60 Hz	460 VΔ	2, 4	80 M ... 200 L	1LE1023-0D ... -2A	**Standard**	3	4			–
50 Hz	500 VY			2, 4	80 M ... 200 L	1LE1023-0D ... -2A	Without add. charge	2	7			–
50 Hz	500 VΔ			2, 4	80 M ... 200 L	1LE1023-0D ... -2A	Without add. charge	4	0			–
Further voltages			For price information, code numbers, order codes and descriptions, see from Page 2/57					9	0			. . .
Types of construction				No. of poles	Frame size	Motor type	Version					Order code(s)
Without flange		IM B3 [2]		2, 4	80 M ... 200 L	1LE1023-0D ... -2A	**Standard**			A		–
With flange		IM B5 [2]		2, 4	80 M ... 200 L	1LE1023-0D ... -2A	With additional charge			F		–
With standard flange		IM B14 [2]		2, 4	80 M ... 160 L	1LE1023-0D ... -2A	With additional charge			K		–
Further types of construction			For price information, code letters and descriptions, see from Page 2/62							■		. . .
Motor protection				No. of poles	Frame size	Motor type	Version					Order code(s)
Without				2, 4	80 M ... 200 L	1LE1023-0D ... -2A	**Standard**				A	–
PTC thermistor with 3 temperature sensors				2, 4	80 M ... 200 L	1LE1023-0D ... -2A	With additional charge				B	–
Further motor protection			For price information, code letters and descriptions, see from Page 2/70								■	. . .
Terminal box position				No. of poles	Frame size	Motor type	Version					Order code(s)
Terminal box at top				2, 4	80 M ... 200 L	1LE1023-0D ... -2A	**Standard**					4 –
Further terminal box positions			For price information, code numbers and descriptions, see from Page 2/72									
Special versions				No. of poles	Frame size	Motor type						Order code(s)
Forced-air cooled motors without ext. fan/fan cover (IC416)				2, 4	80 M ... 200 L	1LE1023-0D ... -2A	**1LE1023-. . . . ■–■■■■**					**-Z F90** +. . .+. . .+. . .
Options			For price information, order codes and descriptions, see from Page 2/74				**1LE1023-. . . . ■–■■■■**					**-Z** . . .+. . .+. . .+. . .

– Not required
✓ Available

[1] Operating voltages only ≤ 600 V admissible in accordance with MG1 Table 12-12.

[2] Types derived from IM B3 (IM B6/7/8, IM V6 and IM V5), from IM B5 (IM V3 and IM V1) and from IM B14 (IM V19 and IM V18) are possible, provided that no requirements exist for condensation drainage holes (**H03**) and stamping of the type on the rating plate. The basic type IM B3, IM B5 or IM B14 is stamped as standard on the rating plate. When ordering with condensation drainage holes (**H03**), the type must be specified.

© Siemens AG 2015

Selection and ordering data (continued)

P_{rated}, 50 Hz	P_{rated}, 60 Hz	Frame size	Operating values at rated output: n_{rated}, 60 Hz	T_{rated}, 60 Hz	EISA CC No. CC032A	η_{rated}, 60 Hz, 4/4	η_{rated}, 60 Hz, 3/4	η_{rated}, 60 Hz, 2/4	cos φ_{rated}, 60 Hz, 4/4	I_{rated}, 60 Hz, 460 V	T_{LR}/T_{rated}, 60 Hz	I_{LR}/I_{rated}, 60 Hz	T_B/T_{rated}, 60 Hz	L_{pfA}, 60 Hz	L_{WA}, 60 Hz	**Aluminum series 1LE1023** – *NEMA Premium Efficient version* Article No.	$m_{IM\ B3}$	J	Torque class
kW	hp	FS	rpm	Nm		%	%	%		A				dB(A)	dB(A)	▲ New			CL
• Cooling: self-ventilated (IC411) or with order code F90 forced-air cooled without external fan and fan cover (IC416) • Efficiency: NEMA Premium Efficient, UL, CSA and service factor (SF) 1.15 – for operation in the USA, Canada and Mexico • Insulation: thermal class 155 (temperature class F), IP55 degree of protection, utilization in accordance with thermal class 130 (temperature class B)																			
6-pole: 1000 rpm at 50 Hz, 1200 rpm at 60 Hz																			
0.37	**0.5**	**80 M**	1150	3.1	–	78.5	77.5	73	0.61	0.97	2.7	5	3.3	45	56	**1LE1023-0DC2■-■■■■**	12	0.0025	13
0.55	**0.75**	**80 M**	1145	4.6	–	81.7	81.3	78	0.63	1.34	2.8	5.3	3.4	45	56	**1LE1023-0DC3■-■■■■**	14	0.0031	13
0.75	**1**	**90 S**	1155	6.2	✓	82.5	82.3	79.5	0.65	1.76	2.4	5.3	3.1	46	58	**1LE1023-0EC0■-■■■■**	16	0.004	13
1.1	**1.5**	**100 L**	1175	8.9	–	87.5	87.5	86.5	0.71	2.2	2.4	7	3.8	62	74	**1LE1023-1AC3■-■■■■**	30	0.014	13
3	**4**	**132 S**	1175	24	✓	89.5	89.5	88.5	0.76	5.5	1.9	7.6	3.4	67	79	**1LE1023-1CC0■-■■■■**	52	0.037	13
4	**5**	**132 M**	1175	30	✓	89.5	89.5	88.5	0.76	6.8	2.2	7.9	3.7	67	79	**1LE1023-1CC2■-■■■■**	52	0.037	13
5.5	**7.5**	**132 M**	1175	45	✓	91	91	90	0.76	10	2.2	7.5	3.5	67	79	**1LE1023-1CC3■-■■■■**	52	0.037	13
7.5	**10**	**160 M**	1185	60	✓	91	91	89.8	0.75	13.8	2.4	5.9	2.6	70	82	**1LE1023-1DC2■-■■■■**	93	0.098	13
11	**15**	**160 L**	1180	89	✓	91.7	91.9	91	0.75	20	2.3	5.8	2.6	70	82	**1LE1023-1DC4■-■■■■**	115	0.12	13
15	**20**	**180 L**	1178	122	✓	91.7	92	91.5	0.79	26	2.5	6.8	3	58	71	▲ **1LE1023-1EC4■-■■■■**	130	0.19	16
18.5	**25**	**200 L**	1180	150	✓	93	93.2	92.6	0.78	32	2.8	6.5	3	67	80	▲ **1LE1023-2AC4■-■■■■**	166	0.28	16
22	**30**	**200 L**	1180	178	✓	93	93.6	93.5	0.79	37.5	2.6	6.3	2.8	67	80	▲ **1LE1023-2AC5■-■■■■**	179	0.32	16

Voltages (≤ 600 V) [1]				No. of poles	Frame size	Motor type	Version					Order code(s)
50 Hz	230 VΔ/400 VY	60 Hz	460 VY	6	80 M ... 200 L	1LE1023-0D ... -2A	**Standard**	**2**	**2**			–
50 Hz	400 VΔ	60 Hz	460 VΔ	6	80 M ... 200 L	1LE1023-0D ... -2A	**Standard**	**3**	**4**			–
50 Hz	500 VY			6	80 M ... 200 L	1LE1023-0D ... -2A	Without add. charge	**2**	**7**			–
50 Hz	500 VΔ			6	80 M ... 200 L	1LE1023-0D ... -2A	Without add. charge	**4**	**0**			–
Further voltages			For price information, code numbers, order codes and descriptions, see from Page 2/57					**9**	**0**			**. . .**
Types of construction				No. of poles	Frame size	Motor type	Version					Order code(s)
Without flange		IM B3 [2]		6	80 M ... 200 L	1LE1023-0D ... -2A	**Standard**			**A**		–
With flange		IM B5 [2]		6	80 M ... 200 L	1LE1023-0D ... -2A	With additional charge			**F**		–
With standard flange		IM B14 [2]		6	80 M ... 160 L	1LE1023-0D ... -2A	With additional charge			**K**		–
Further types of construction			For price information, code letters and descriptions, see from Page 2/62							**■**		**. . .**
Motor protection				No. of poles	Frame size	Motor type	Version					Order code(s)
Without				6	80 M ... 200 L	1LE1023-0D ... -2A	**Standard**				**A**	–
PTC thermistor with 3 temperature sensors				6	80 M ... 200 L	1LE1023-0D ... -2A	With additional charge				**B**	–
Further motor protection			For price information, code letters and descriptions, see from Page 2/70								**■**	**. . .**
Terminal box position				No. of poles	Frame size	Motor type	Version					Order code(s)
Terminal box at top				6	80 M ... 200 L	1LE1023-0D ... -2A	**Standard**					–
Further terminal box positions			For price information, code numbers and descriptions, see from Page 2/72									
Special versions				No. of poles	Frame size	Motor type						Order code(s)
Forced-air cooled motors without ext. fan/fan cover (IC416)				6	80 M ... 200 L	1LE1023-0D ... -2A	**1LE1023- . . . . ■–■■■■**					**-Z F90**
Options			For price information, order codes and descriptions, see from Page 2/74				**1LE1023- . . . . ■–■■■■**					**-Z . . .**

– Not required
✓ Available

[1] Operating voltages only ≤ 600 V admissible in accordance with MG1 Table 12-12.

[2] Types derived from IM B3 (IM B6/7/8, IM V6 and IM V5), from IM B5 (IM V3 and IM V1) and from IM B14 (IM V19 and IM V18) are possible, provided that no requirements exist for condensation drainage holes (**H03**) and stamping of the type on the rating plate. The basic type IM B3, IM B5 or IM B14 is stamped as standard on the rating plate. When ordering with condensation drainage holes (**H03**), the type must be specified.

© Siemens AG 2015

Self-ventilated or forced-air cooled motors · Cast-iron series 1LE1523/1LE1623 Basic/Performance Line

Selection and ordering data

P_{rated}, 50 Hz	P_{rated}, 60 Hz	Frame size	Operating values at rated output: n_{rated}, 60 Hz	T_{rated}, 60 Hz	EISA CC No. CC032A	η_{rated}, 60 Hz, 4/4	η_{rated}, 60 Hz, 3/4	η_{rated}, 60 Hz, 2/4	cos φ_{rated}, 60 Hz, 4/4	I_{rated}, 60 Hz, 460 V	T_{LR}/T_{rated}, 60 Hz	I_{LR}/I_{rated}, 60 Hz	T_B/T_{rated}, 60 Hz	L_{pfA}, 60 Hz	L_{WA}, 60 Hz	Cast-iron series 1LE1523 – *Basic Line* 1LE1623 – *Performance Line* *NEMA Premium Efficient version* Article No.	$m_{IM\ B3}$	J	Torque class
kW	hp	FS	rpm	Nm		%	%	%		A				dB(A)	dB(A)		kg	kgm²	CL
• Cooling: self-ventilated (IC411) or with order code F90 forced-air cooled without external fan and fan cover (IC416)																			
• Efficiency: NEMA Premium Efficient, UL, CSA and service factor (SF) 1.15 – for operation in the USA, Canada and Mexico																			
• Insulation: thermal class 155 (temperature class F), IP55 degree of protection, utilization in accordance with thermal class 130 (temperature class B)																			
2-pole: 3000 rpm at 50 Hz, 3600 rpm at 60 Hz																			
0.37	0.5	71 M	3470	1.0	–	73.4	71.7	67.1	0.73	0.83	4.2	6.8	4.2	57	68	1LE1 5 23-0CA2 ■-■■■■	13	0.00045	16
0.55	0.75	71 M	3480	1.5	–	81.1	79.6	75.2	0.73	1.17	4.2	7.1	4.2	57	68	1LE1 5 23-0CA3 ■-■■■■	14.5	0.00056	16
0.75	1	80 M	3480	2.1	–	77.0	78.0	76.0	0.84	1.46	3.0	7.1	3.6	64	75	1LE1 5 23-0DA2 ■-■■■■	18	0.0011	16
1.1	1.5	80 M	3500	3	–	84.0	84.0	83.0	0.83	1.98	3.3	8.4	4.5	64	75	1LE1 5 23-0DA3 ■-■■■■	21	0.0013	16
1.5	2	90 S	3525	4.1	✓	85.5	85.0	82.5	0.84	2.60	3.1	9.8	4.9	69	81	1LE1 5 23-0EA0 ■-■■■■	25.5	0.0021	16
2.2	3	90 L	3530	6	✓	86.5	86.3	84.5	0.87	3.65	3.0	9.6	4.9	69	81	1LE1 5 23-0EA4 ■-■■■■	32	0.0031	16
3	4	100 L	3525	8.1	–	88.5	88.5	87.5	0.87	4.9	3.8	9.7	5.5	71	83	1LE1 ■ 23-1AA4 ■-■■■■	36	0.0054	16
4	5	112 M	3565	9.9	✓	88.5	88.5	87.5	0.87	6	3.8	10	5.6	73	85	1LE1 ■ 23-1BA2 ■-■■■■	45	0.012	16
5.5	7.5	132 S	3555	15	✓	89.5	89.5	88.5	0.9	8.6	2.1	8.6	4.4	72	84	1LE1 ■ 23-1CA0 ■-■■■■	58	0.024	16
7.5	10	132 S	3555	20	✓	90.2	90.2	89.2	0.91	11.5	2.4	9.5	4.7	72	84	1LE1 ■ 23-1CA1 ■-■■■■	73	0.031	16
11	15	160 M	3560	30	✓	91	91	90	0.88	17.2	2.8	8.5	4.3	77	89	1LE1 ■ 23-1DA2 ■-■■■■	100	0.053	16
15	20	160 M	3565	40	✓	91	91	90	0.86	24	3.1	9.7	4.8	77	89	1LE1 ■ 23-1DA3 ■-■■■■	110	0.061	16
18.5	25	160 L	3560	50	✓	91.7	91.7	90.7	0.9	28	3.1	9.4	4.4	77	89	1LE1 ■ 23-1DA4 ■-■■■■	127	0.068	16
22	30	180 M	3560	59	✓	91.7	91.4	90	0.89	34	2.8	8.3	3.9	78	85	1LE1 ■ 23-1EA2 ■-■■■■	160	0.08	16
30	40	200 L	3560	80	✓	92.4	92.2	91.4	0.87	47	2.9	7.6	3.6	78	86	1LE1 ■ 23-2AA4 ■-■■■■	225	0.134	16
37	50	200 L	3560	99	✓	93	92.8	91.6	0.88	57	2.8	7.5	3.6	79	86	1LE1 ■ 23-2AA5 ■-■■■■	250	0.158	16
45	60	225 M	3570	120	✓	93.6	93.7	93.1	0.88	69	2.7	7.6	3.5	75	89	1LE1 ■ 23-2BA2 ■-■■■■	315	0.26	16
55	75	250 M	3578	147	–	93.6	93.4	92.3	0.89	83	2.5	7.3	3.3	76	90	1LE1 ■ 23-2CA2 ■-■■■■	385	0.46	13
75	100	280 S	3578	200	–	94.1	93.9	92.7	0.89	112	2.7	7.6	3.2	78	92	1LE1 ■ 23-2DA0 ■-■■■■	510	0.77	13
90	125	280 M	3578	240	✓	95	94.8	93.8	0.9	132	2.7	8.1	3.3	78	92	1LE1 ■ 23-2DA2 ■-■■■■	590	0.94	13
110	150	315 S	3585	293	✓	95	94.8	93.8	0.91	160	2.6	8	3.3	79	93	1LE1 ■ 23-3AA0 ■-■■■■	750	1.39	13
132	175	315 M	3585	352	–	95.4	95.1	94	0.91	191	2.8	8	3.4	79	93	1LE1 ■ 23-3AA2 ■-■■■■	880	1.6	13
150	200	315 L	3588	399	✓	95.4	95.1	93.9	0.91	215	3.3	9.1	3.7	82	96	1LE1 ■ 23-3AA4 ■-■■■■	980	1.9	13
185	250	315 L	3586	493	–	95.8	95.7	94.8	0.92	265	3.5	8.5	3.5	82	96	1LE1 ■ 23-3AA5 ■-■■■■	1150	2.3	13

	Relubrication	Motor protection	Fan cover	Bearing size	Liability for defects	
Basic Line	Optional (standard from FS 280 upwards)	Optional	Plastic	62 (63 from FS 280 upwards)	12 months	5
Performance Line	Standard from FS 160 (optional for FS 100 to 132)	Standard PTC	Steel	63	36 months	6

Voltages (≤ 600 V) [1]			No. of poles	Frame size	Motor type	Version					Order code(s)
50 Hz	230 VΔ/400 VY	60 Hz 460 VY	2	71 M ... 315 L	1LE1■23-0C … -3A	**Standard**	2	2			–
50 Hz	400 VΔ	60 Hz 460 VΔ	2	71 M ... 315 L	1LE1■23-0C … -3A	**Standard**	3	4			–
50 Hz	500 VY		2	71 M ... 315 L	1LE1■23-0C … -3A	Without add. chrg.	2	7			–
50 Hz	500 VΔ		2	71 M ... 315 L	1LE1■23-0C … -3A	Without add. chrg.	4	0			–
Further voltages	For price information, code numbers, order codes and descriptions, see from Page 2/60						9	0			. . .

Types of construction			No. of poles	Frame size	Motor type	Version					Order code(s)
Without flange	IM B3 [2]		2	71 M ... 315 L	1LE1■23-0C … -3A	**Standard**			A		–
With flange	IM B5 [2]		2	71 M ... 315 M	1LE1■23-0C … -3A	With additional charge			F		–
With standard flange	IM B14 [2]		2	71 M ... 160 L	1LE1■23-0C … -1D	With additional charge			K		–
Further types of construction	For price information, code letters and descriptions, see from Page 2/66								■		. . .

Motor protection	Line	No. of poles	Frame size	Motor type	Version					Order code(s)
Without	Only possible for **Basic Line**	2	71 M ... 315 L	1LE1523-0C … -3A	**Standard**				A	–
PTC thermistor with 3 temperature sensors	**Basic Line**	2	71 M ... 315 L	1LE1523-0C … -3A	With additional charge				B	–
	Performance Line	2	71 M ... 315 L	1LE1623-0C … -3A	**Standard**				B	–
Further motor protection	For price information, code letters and descriptions, see from Page 2/71								■	. . .

Terminal box position	No. of poles	Frame size	Motor type	Version					Order code(s)
Terminal box at top	2	71 M ... 315 L	1LE1■23-0C … -3A	**Standard**				4	–
Further terminal box positions	For price information, code numbers and descriptions, see from Page 2/73								

Special versions	No. of poles	Frame size	Motor type		Order code(s)
Forced-air cooled motors without ext. fan/fan cover (IC 416)	2	71 M ... 315 L	1LE1■23-0C … -3A	1LE1■23-. . . . ■-■■■■ -Z	F90+. . .+. . .+. . .
Options	For price information, order codes and descriptions, see from Page 2/80			1LE1■23-. . . . ■-■■■■ -Z	. . .+. . .+. . .+. . .

– Not required
✓ Available

[1] Operating voltages only ≤ 600 V admissible in accordance with MG1 Table 12-12.
Parallel supply lines are required in the case of connection to ≤ 240 V.
For frame size 315 with connection to ≤ 240 V, due to the high current, a drilled, removable entry plate (Order code **R52**) or a larger terminal box (Order code **R50**) can be used. Order codes **R52** and **R50** alter the motor dimensions.

[2] Types derived from IM B3 (IM B6/7/8, IM V6 and IM V5), from IM B5 (IM V3 and IM V1) and from IM B14 (IM V19 and IM V18) are possible, provided that no requirement exists for stamping of the type on the rating plate. The basic type IM B3, IM B5 or IM B14 is stamped as standard on the rating plate. If mounted in a different position, the position must be specified to ensure that the condensation drainage holes are positioned correctly.

© Siemens AG 2015

Selection and ordering data (continued)

P_{rated}, 50 Hz	P_{rated}, 60 Hz	Frame size	Operating values at rated output: n_{rated}, 60 Hz	T_{rated}, 60 Hz	EISA CC No. CC032A	η_{rated}, 60 Hz, 4/4	η_{rated}, 60 Hz, 3/4	η_{rated}, 60 Hz, 2/4	cos φ_{rated}, 60 Hz, 4/4	I_{rated}, 60 Hz, 460 V	T_{LR}/T_{rated}, 60 Hz	I_{LR}/I_{rated}, 60 Hz	T_B/T_{rated}, 60 Hz	L_{pfA}, 60 Hz	L_{WA}, 60 Hz	Cast-iron series 1LE1523 – *Basic Line* 1LE1623 – *Performance Line* *NEMA Premium Efficient version* Article No.	$m_{IM\ B3}$	J	Torque class
kW	hp	FS	rpm	Nm		%	%	%		A				dB(A)	dB(A)		kg	kgm²	CL
• Cooling: self-ventilated (IC411) or with order code F90 forced-air cooled without external fan and fan cover (IC416)																			
• Efficiency: NEMA Premium Efficient, UL, CSA and service factor (SF) 1.15 – for operation in the USA, Canada and Mexico																			
• Insulation: thermal class 155 (temperature class F), IP55 degree of protection, utilization in accordance with thermal class 130 (temperature class B)																			
4-pole: 1500 rpm at 50 Hz, 1800 rpm at 60 Hz																			
0.25	0.33	71 M	1715	1.4	–	73.4	72.3	68.2	0.68	0.65	2.9	4.9	3.1	47	58	1LE1 5 23-0CB2 ■-■■■■	13	0.00095	16
0.37	0.5	71 M	1725	2	–	78.2	76.6	71.9	0.65	0.90	2.9	5.4	3.3	47	58	1LE1 5 23-0CB3 ■-■■■■	16	0.0014	16
0.55	0.75	80 M	1750	3	–	82.5	82.2	79.4	0.74	1.13	2.7	6.9	3.8	55	66	1LE1 5 23-0DB2 ■-■■■■	18.5	0.0021	16
0.75	1	80 M	1760	4.1	–	85.5	84.5	81.0	0.71	1.55	3.1	8.3	4.7	55	66	1LE1 5 23-0DB3 ■-■■■■	22.5	0.0029	16
1.1	1.5	90 S	1750	6	✓	86.5	86.3	84.1	0.75	2.15	3.4	8.2	4.4	58	70	1LE1 5 23-0EB0 ■-■■■■	25	0.0036	16
1.5	2	90 L	1755	8.2	✓	86.5	87.0	85.0	0.77	2.85	3.0	8.4	4.3	58	70	1LE1 5 23-0EB4 ■-■■■■	31	0.0049	16
2.2	3	100 L	1770	12	–	89.5	89.5	88.5	0.81	3.8	3.5	9.6	5.1	62	74	1LE1 ■ 23-1AB4 ■-■■■■	40	0.014	16
3	4	100 L	1760	16	–	89.5	89.5	88.5	0.82	5.1	3.1	9.5	4.6	62	74	1LE1 ■ 23-1AB5 ■-■■■■	40	0.014	16
4	5	112 M	1770	20	✓	89.5	89.5	88.5	0.8	6.5	2.9	8.2	4.3	62	74	1LE1 ■ 23-1BB2 ■-■■■■	46	0.017	16
5.5	7.5	132 S	1780	30	✓	91.7	91.7	90.7	0.83	9.1	2.9	9.5	4.4	68	80	1LE1 ■ 23-1CB0 ■-■■■■	74	0.046	16
7.5	10	132 M	1770	40	✓	91.7	91.7	90.7	0.83	12.4	2.7	9.6	4.2	68	80	1LE1 ■ 23-1CB2 ■-■■■■	80	0.046	16
11	15	160 M	1775	59	✓	92.4	92.4	91.4	0.83	18	3	8.9	3.8	69	81	1LE1 ■ 23-1DB2 ■-■■■■	109	0.083	16
15	20	160 L	1780	80	✓	93	93	91.5	0.81	25	2.9	9.5	4.3	69	81	1LE1 ■ 23-1DB4 ■-■■■■	127	0.099	16
18.5	25	180 M	1775	100	✓	93.6	93.7	93.1	0.81	30.5	2.7	7.8	3.6	68	75	1LE1 ■ 23-1EB2 ■-■■■■	165	0.13	16
22	30	180 L	1775	118	✓	93.6	93.8	93.3	0.81	36.5	2.8	7.7	3.7	70	77	1LE1 ■ 23-1EB4 ■-■■■■	170	0.14	16
30	40	200 L	1778	161	✓	94.1	94.3	93.8	0.83	48	3	8.1	3.5	67	74	1LE1 ■ 23-2AB5 ■-■■■■	240	0.22	16
37	50	225 S	1782	198	–	94.5	94.7	94.2	0.85	58	2.8	7.5	3	66	80	1LE1 ■ 23-2BB0 ■-■■■■	285	0.42	16
45	60	225 M	1782	241	✓	95	95.3	94.9	0.84	70	2.9	7.2	3	67	81	1LE1 ■ 23-2BB2 ■-■■■■	320	0.47	16
55	75	250 M	1786	294	–	95.4	95.6	95.1	0.86	84	2.8	7.6	3.2	67	81	1LE1 ■ 23-2CB2 ■-■■■■	420	0.85	16
75	100	280 S	1788	401	–	95.4	95.3	94.5	0.85	116	2.8	7.7	3.3	77	91	1LE1 ■ 23-2DB0 ■-■■■■	570	1.39	16
90	125	280 M	1788	481	✓	95.4	95.5	94.9	0.87	136	2.9	8	3.3	79	93	1LE1 ■ 23-2DB2 ■-■■■■	670	1.7	16
110	150	315 S	1790	587	✓	95.8	95.9	95.4	0.86	168	3	7.5	3.1	73	87	1LE1 ■ 23-3AB0 ■-■■■■	760	2.2	16
132	175	315 M	1790	704	–	96.2	96.3	95.8	0.87	198	3.1	8.2	3.2	76	90	1LE1 ■ 23-3AB2 ■-■■■■	960	2.9	16
150	200	315 L	1791	800	✓	96.2	96.2	95.7	0.87	225	3.5	8.8	3.6	76	90	1LE1 ■ 23-3AB4 ■-■■■■	990	3.1	16
185	250	315 L	1791	986	–	96.2	96.2	95.5	0.87	275	3.9	9	3.6	78	93	1LE1 ■ 23-3AB5 ■-■■■■	1190	3.7	16

	Relubrication	Motor protection	Fan cover	Bearing size	Liability for defects		
Basic Line	Optional (standard from FS 280 upwards)	Optional	Plastic	62 (63 from FS 280 upwards)	12 months	5	
Performance Line	Standard from FS 160 (optional for FS 100 to 132)	Standard PTC	Steel	63	36 months	6	

Voltages (≤ 600 V) [1]				No. of poles	Frame size	Motor type	Version				Order code(s)
50 Hz	230 V∆/400 VY	60 Hz	460 VY	4	71 M ... 315 L	1LE1■23-0C ... -3A	**Standard**	2	2		–
50 Hz	400 V∆	60 Hz	460 V∆	4	71 M ... 315 L	1LE1■23-0C ... -3A	**Standard**	3	4		–
50 Hz	500 VY			4	71 M ... 315 L	1LE1■23-0C ... -3A	Without add. chrg.	2	7		–
50 Hz	500 V∆			4	71 M ... 315 L	1LE1■23-0C ... -3A	Without add. chrg.	4	0		–
Further voltages		For price information, code numbers, order codes and descriptions, see from Page 2/60						9	0		. . .

Types of construction			No. of poles	Frame size	Motor type	Version			Order code(s)
Without flange	IM B3 [2]		4	71 M ... 315 L	1LE1■23-0C ... -3A	**Standard**	A		–
With flange	IM B5 [2]		4	71 M ... 315 M	1LE1■23-0C ... -3A	With additional charge	F		–
With standard flange	IM B14 [2]		4	71 M ... 160 L	1LE1■23-0C ... -1D	With additional charge	K		–
Further types of construction		For price information, code letters and descriptions, see from Page 2/66					■		. . .

Motor protection	Line	No. of poles	Frame size	Motor type	Version			Order code(s)
Without	Only possible for **Basic Line**	4	71 M ... 315 L	1LE1523-0C ... -3A	**Standard**	A		–
PTC thermistor with 3 temperature sensors	**Basic Line**	4	71 M ... 315 L	1LE1523-0C ... -3A	With additional charge	B		–
	Performance Line	4	71 M ... 315 L	1LE1623-0C ... -3A	**Standard**	B		–
Further motor protection	For price information, code letters and descriptions, see from Page 2/71					■		. . .

Terminal box position	No. of poles	Frame size	Motor type	Version			Order code(s)
Terminal box at top	4	71 M ... 315 L	1LE1■23-0C ... -3A	**Standard**	4		–
Further terminal box positions	For price information, code numbers and descriptions, see from Page 2/73						

Special versions	No. of poles	Frame size	Motor type				Order code(s)
Forced-air cooled motors without ext. fan/fan cover (IC 416)	4	71 M ... 315 L	1LE1■23-0C ... -3A	1LE1■23-. . . . ■-■■■■	-Z		F90+. . .+. . .+. . .
Options	For price information, order codes and descriptions, see from Page 2/80			1LE1■23-. . . . ■-■■■■	-Z		. . .+. . .+. . .+. . .

– Not required
✓ Available

1) Operating voltages only ≤ 600 V admissible in accordance with MG1 Table 12-12.
Parallel supply lines are required in the case of connection to ≤ 240 V.
For frame size 315 with connection to ≤ 240 V, due to the high current, a drilled, removable entry plate (Order code **R52**) or a larger terminal box (Order code **R50**) can be used. Order codes **R52** and **R50** alter the motor dimensions.

2) Types derived from IM B3 (IM B6/7/8, IM V6 and IM V5), from IM B5 (IM V3 and IM V1) and from IM B14 (IM V19 and IM V18) are possible, provided that no requirement exists for stamping of the type on the rating plate. The basic type IM B3, IM B5 or IM B14 is stamped as standard on the rating plate. If mounted in a different position, the position must be specified to ensure that the condensation drainage holes are positioned correctly.

© Siemens AG 2015

Selection and ordering data (continued)

P_{rated}, 50 Hz	P_{rated}, 60 Hz	Frame size	Operating values at rated output: n_{rated}, 60 Hz	T_{rated}, 60 Hz	EISA CC No. CC032A	η_{rated}, 60 Hz, 4/4	η_{rated}, 60 Hz, 3/4	η_{rated}, 60 Hz, 2/4	cos φ_{rated}, 60 Hz, 4/4	I_{rated}, 60 Hz, 460 V	T_{LR}/T_{rated}, 60 Hz	I_{LR}/I_{rated}, 60 Hz	T_B/T_{rated}, 60 Hz	L_{pfA}, 60 Hz	L_{WA}, 60 Hz	Cast-iron series 1LE1523 – *Basic Line* 1LE1623 – *Performance Line* *NEMA Premium Efficient version* Article No.	$m_{IM\ B3}$	J	Torque class
kW	hp	FS	rpm	Nm		%	%	%		A				dB(A)	dB(A)		kg	kgm^2	CL
• Cooling: self-ventilated (IC411) or with order code F90 forced-air cooled without external fan and fan cover (IC416) • Efficiency: NEMA Premium Efficient, UL, CSA and service factor (SF) 1.15 – for operation in the USA, Canada and Mexico • Insulation: thermal class 155 (temperature class F), IP55 degree of protection, utilization in accordance with thermal class 130 (temperature class B)																			
6-pole: 1000 rpm at 50 Hz, 1200 rpm at 60 Hz																			
0.18	0.25	71 M	1110	1.5	–	67.5	66.3	61.0	0.63	0.53	2.8	3.5	2.9	42	53	1LE1 5 23-0CC2 ■-■■■■	12.5	0.001	16
0.25	0.33	71 M	1120	2.1	–	71.4	70.2	65.6	0.62	0.71	3.1	3.8	3.3	42	53	1LE1 5 23-0CC3 ■-■■■■	15.5	0.015	16
0.37	0.5	80 M	1150	3.1	–	78.5	77.5	73.0	0.61	0.97	2.7	5.0	3.3	45	56	1LE1 5 23-0DC2 ■-■■■■	18.5	0.0025	13
0.55	0.75	80 M	1145	4.6	–	81.7	81.3	78.0	0.63	1.34	2.8	5.3	3.4	45	56	1LE1 5 23-0DC3 ■-■■■■	22.5	0.0031	13
0.75	1	90 S	1155	6.2	✓	82.5	82.3	79.5	0.65	1.76	2.4	5.3	3.1	46	58	1LE1 5 23-0EC0 ■-■■■■	26.5	0.0040	13
3	4	132 S	1175	24	✓	89.5	89.5	88.5	0.76	5.5	1.9	7.6	3.4	67	79	1LE1 ■ 23-1CC0 ■-■■■■	70	0.037	13
4	5	132 M	1175	30	✓	89.5	89.5	88.5	0.76	6.8	2.2	7.9	3.7	67	79	1LE1 ■ 23-1CC2 ■-■■■■	70	0.037	13
5.5	7.5	132 M	1175	45	✓	91	91	90	0.76	10	2.2	7.5	3.5	67	79	1LE1 ■ 23-1CC3 ■-■■■■	83	0.037	13
7.5	10	160 M	1185	60	✓	91	91	89.8	0.75	13.8	2.4	5.9	2.6	70	82	1LE1 ■ 23-1DC2 ■-■■■■	122	0.098	13
11	15	160 L	1180	89	✓	91.7	91.9	91	0.75	20	2.3	5.8	2.6	70	82	1LE1 ■ 23-1DC4 ■-■■■■	147	0.12	13
15	20	180 L	1178	122	✓	91.7	92	91.5	0.79	26	2.5	6.8	3	58	71	1LE1 ■ 23-1EC4 ■-■■■■	180	0.19	16
18.5	25	200 L	1180	150	✓	93	93.2	92.6	0.78	32	2.8	6.5	3	67	80	1LE1 ■ 23-2AC4 ■-■■■■	215	0.28	16
22	30	200 L	1180	178	✓	93	93.6	93.5	0.79	37.5	2.6	6.3	2.8	67	80	1LE1 ■ 23-2AC5 ■-■■■■	230	0.32	16
30	40	225 M	1185	242	✓	94.1	94.4	94.1	0.82	49	2.9	7.6	3.3	66	79	1LE1 ■ 23-2BC2 ■-■■■■	325	0.67	16
37	50	250 M	1188	297	–	94.1	94.4	93.9	0.83	59	3.1	8	3.1	63	76	1LE1 ■ 23-2CC2 ■-■■■■	405	1	16
45	60	280 S	1190	361	–	94.5	94.6	94.1	0.83	72	3.3	7.7	3.1	66	80	1LE1 ■ 23-2DC0 ■-■■■■	510	1.4	16
55	75	280 M	1190	441	–	94.5	94.6	94	0.83	88	3.6	7.9	3.3	66	80	1LE1 ■ 23-2DC2 ■-■■■■	560	1.6	16
75	100	315 S	1192	601	✓	95	94.9	94.1	0.82	121	3.1	8.4	3.3	64	79	1LE1 ■ 23-3AC0 ■-■■■■	750	2.6	16
90	125	315 M	1192	721	✓	95	95.1	94.4	0.84	142	2.7	7.7	3	64	79	1LE1 ■ 23-3AC2 ■-■■■■	890	3.1	16
110	150	315 L	1192	881	✓	95.8	96	95.5	0.83	174	3.2	8.2	3.4	64	79	1LE1 ■ 23-3AC4 ■-■■■■	990	3.9	16
132	175	315 L	1192	1057	–	95.8	96	95.6	0.84	205	3.1	8.4	3.3	65	80	1LE1 ■ 23-3AC5 ■-■■■■	1110	4.4	16
160	200	315 L	1192	1202	✓	95.8	95.7	95	0.81	245	3.6	9.6	4.1	69	83	1LE1 ■ 23-3AC6 ■-■■■■	1160	4.6	16

	Relubrication	Motor protection	Fan cover	Bearing size	Liability for defects	
Basic Line	Optional (standard from FS 280 upwards)	Optional	Plastic	62 (63 from FS 280 upwards)	12 months	5
Performance Line	Standard from FS 160 (optional for FS 100 to 132)	Standard PTC	Steel	63	36 months	6

Voltages (≤ 600 V) [1]				No. of poles	Frame size	Motor type	Version				Order code(s)
50 Hz	230 VΔ/400 VY	60 Hz	460 VY	6	71 M ... 315 L	1LE1■23-0C … -3A	**Standard**	2	2		–
50 Hz	400 VΔ	60 Hz	460 VΔ	6	71 M ... 315 L	1LE1■23-0C … -3A	**Standard**	3	4		–
50 Hz	500 VY			6	71 M ... 315 L	1LE1■23-0C … -3A	Without add. chrg.	2	7		–
50 Hz	500 VΔ			6	71 M ... 315 L	1LE1■23-0C … -3A	Without add. chrg.	4	0		–
Further voltages		For price information, code numbers, order codes and descriptions, see from Page 2/60						9	0		. . .

Types of construction			No. of poles	Frame size	Motor type	Version			Order code(s)
Without flange	IM B3 [2]		6	71 M ... 315 L	1LE1■23-0C … -3A	**Standard**	A		–
With flange	IM B5 [2]		6	71 M ... 315 M	1LE1■23-0C … -3A	With additional charge	F		–
With standard flange	IM B14 [2]		6	71 M ... 160 L	1LE1■23-0C … -1D	With additional charge	K		–
Further types of construction		For price information, code letters and descriptions, see from Page 2/66					■		. . .

Motor protection	Line	No. of poles	Frame size	Motor type	Version			Order code(s)
Without	Only possible for **Basic Line**	6	71 M ... 315 L	1LE1523-0C … -3A	**Standard**	A		–
PTC thermistor with 3 temperature sensors	**Basic Line**	6	71 M ... 315 L	1LE1523-0C … -3A	With additional charge	B		–
	Performance Line	6	71 M ... 315 L	1LE1623-0C … -3A	**Standard**	B		–
Further motor protection	For price information, code letters and descriptions, see from Page 2/71					■		. . .

Terminal box position	No. of poles	Frame size	Motor type	Version		Order code(s)
Terminal box at top	6	71 M ... 315 L	1LE1■23-0C … -3A	**Standard**	4	–
Further terminal box positions	For price information, code numbers and descriptions, see from Page 2/73					

Special versions	No. of poles	Frame size	Motor type		Order code(s)
Forced-air cooled motors without ext. fan/fan cover (IC 416)	6	71 M ... 315 L	1LE1■23-0C … -3A	1LE1■23-. . . . ■-■■■■ -Z	F90+. . .+. . .+. . .
Options	For price information, order codes and descriptions, see from Page 2/80			1LE1■23-. . . . ■-■■■■ -Z	. . .+. . .+. . .+. . .

– Not required
✓ Available

[1] Operating voltages only ≤ 600 V admissible in accordance with MG1 Table 12-12.
Parallel supply lines are required in the case of connection to ≤ 240 V.
For frame size 315 with connection to ≤ 240 V, due to the high current, a drilled, removable entry plate (Order code **R52**) or a larger terminal box (Order code **R50**) can be used. Order codes **R52** and **R50** alter the motor dimensions.

[2] Types derived from IM B3 (IM B6/7/8, IM V6 and IM V5), from IM B5 (IM V3 and IM V1) and from IM B14 (IM V19 and IM V18) are possible, provided that no requirement exists for stamping of the type on the rating plate. The basic type IM B3, IM B5 or IM B14 is stamped as standard on the rating plate. If mounted in a different position, the position must be specified to ensure that the condensation drainage holes are positioned correctly.

© Siemens AG 2015

2

Selection and ordering data

P_{rated1}, 50 Hz	P_{rated2}, 50 Hz	Frame size	Operating values at rated output for N1: n_{rated1}, 50 Hz	T_{rated1}, 50 Hz	η_{rated1}, 50 Hz, 4/4	cos φ_{rated1}, 50 Hz, 4/4	I_{rated1}, 50 Hz, 400 V	T_{LR}/T_{rated1}, 50 Hz	I_{LR}/I_{rated1}, 50 Hz	T_B/T_{rated1}, 50 Hz	Operating values at rated output for N2: n_{rated2}, 50 Hz	T_{rated2}, 50 Hz	η_{rated2}, 50 Hz, 4/4	cos φ_{rated2}, 50 Hz, 4/4	I_{rated2}, 50 Hz, 400 V	T_{LR}/T_{rated2}, 50 Hz	I_{LR}/I_{rated2}, 50 Hz	T_B/T_{rated2}, 50 Hz	**Aluminum series 1LE1011** – *One winding pole-changing for constant load torque* Article No.	$m_{IM\ B3}$	J	Torque class
kW	kW	FS	rpm	Nm	%		A				rpm	Nm	%		A					kg	kgm²	CL
• Cooling: self-ventilated (IC411) • Line operation: double pole-changing for constant load torque • Insulation: thermal class 155 (temperature class F), IP55 degree of protection, utilization in accordance with thermal class 130 (temperature class B)																						
4/2-pole: 1500/3000 rpm at 50 Hz with one winding connected in Dahlander circuit																						
1500 rpm	*3000 rpm*		*1500 rpm*								*3000 rpm*											
1.9	**2.4**	**100 L**	1390	13.1	72	0.87	4.40	1.7	4.1	1.8	2800	8.2	70	0.88	5.6	1.8	4.2	1.8	**1LE1011-1AJ4** ■-■■■■	18	0.0059	13
2.5	**3.1**	**100 L**	1440	16.6	76.3	0.87	5.4	1.9	5.2	2.8	2840	10.4	77.3	0.9	6.4	2.1	5.2	2.9	**1LE1011-1AJ5** ■-■■■■	22	0.0078	13
3.7	**4.4**	**112 M**	1420	24.9	79.9	0.86	7.8	1.8	4.9	2.3	2885	14.6	80.8	0.92	8.5	2.1	6.4	2.6	**1LE1011-1BJ2** ■-■■■■	27	0.01	13
4.7	**5.9**	**132 S**	1440	31.2	82	0.84	9.8	1.6	5.6	2.7	2875	19.6	80	0.89	12.0	1.8	5.6	2.8	**1LE1011-1CJ0** ■-■■■■	38	0.019	13
6.5	**8.0**	**132 M**	1435	43.3	82	0.86	13.3	1.7	5.4	2.6	2880	26.5	82	0.92	15.3	1.8	6.3	2.8	**1LE1011-1CJ2** ■-■■■■	44	0.024	13
9.3	**11.5**	**160 M**	1440	61.7	84.5	0.87	18.3	1.7	5.7	2.8	2870	38.3	82	0.92	22.0	1.8	6	2.9	**1LE1011-1DJ2** ■-■■■■	62	0.044	13
13.0	**16**	**160 L**	1450	85.6	87	0.85	25.5	1.6	6	2.3	2920	52.3	86	0.94	35.5	1.9	7.1	2.8	**1LE1011-1DJ6** ■-■■■■	85	0.068	13
8/4-pole: 750/1500 rpm at 50 Hz with one winding connected in Dahlander circuit																						
750 rpm	*1500 rpm*		*750 rpm*								*1500 rpm*											
0.55	**1.1**	**100 L**	715	7.3	57	0.53	2.65	2	3	2.7	1425	7.4	77.7	0.87	2.35	1.7	4.6	2.1	**1LE1011-1AL4** ■-■■■■	18	0.0059	10
0.9	**1.5**	**100 L**	700	12.3	64.2	0.64	3.15	1.5	2.9	2	1415	10.1	77.7	0.89	3.15	1.5	4.5	1.9	**1LE1011-1AL5** ■-■■■■	22	0.0078	10
1.1	**1.9**	**112 M**	715	14.7	66.5	0.6	4.00	1.6	3.2	2.3	1440	12.6	80.9	0.87	3.90	1.6	5.4	2.3	**1LE1011-1BL2** ■-■■■■	27	0.01	10
1.6	**3.2**	**132 S**	730	20.9	61.5	0.53	7.1	1.6	3.3	2.6	1450	21.1	82.3	0.87	6.5	1.4	5	2.1	**1LE1011-1CL0** ■-■■■■	38	0.019	10
2.2	**4.4**	**132 M**	730	28.8	68	0.52	9.0	2	3.8	3	1450	29	84.5	0.88	8.5	1.5	5.5	2.3	**1LE1011-1CL2** ■-■■■■	44	0.024	10
3.5	**7**	**160 M**	730	45.8	77.5	0.57	11.4	2	4.2	2.8	1450	46.1	84	0.9	13.4	1.6	5.2	2.2	**1LE1011-1DL2** ■-■■■■	62	0.044	10
5.6	**11**	**160 L**	725	73.8	80.2	0.6	16.8	1.9	4	2.7	1445	72.7	84.4	0.9	21.0	1.5	5.1	2.2	**1LE1011-1DL4** ■-■■■■	73	0.056	10

Voltages			No. of poles	Frame size	Motor type	Version					Order code(s)
50 Hz	230 V		4/2, 8/4	100 L ... 160 L	1LE1011-1A ... -1D	**Standard**	**2**	**2**			–
50 Hz	400 V		4/2, 8/4	100 L ... 160 L	1LE1011-1A ... -1D	**Standard**	**3**	**4**			–
50 Hz	500 V		4/2, 8/4	100 L ... 160 L	1LE1011-1A ... -1D	Without add. charge	**4**	**0**			–
50 Hz	690 V		4/2, 8/4	100 L ... 160 L	1LE1011-1A ... -1D	Without add. charge	**4**	**7**			–
Further voltages [1]		For price information, code numbers, order codes and descriptions, see from Page 2/59					**9**	**0**			. . .
Types of construction			No. of poles	Frame size	Motor type	Version					Order code(s)
Without flange		IM B3 [2]	4/2, 8/4	100 L ... 160 L	1LE1011-1A ... -1D	**Standard**			**A**		–
With flange		IM B5 [2]	4/2, 8/4	100 L ... 160 L	1LE1011-1A ... -1D	With additional charge			**F**		–
With standard flange		IM B14 [2]	4/2, 8/4	100 L ... 160 L	1LE1011-1A ... -1D	With additional charge			**K**		–
Further types of construction		For price information, code letters and descriptions, see from Page 2/62							■		. . .
Motor protection			No. of poles	Frame size	Motor type	Version					Order code(s)
Without			4/2, 8/4	100 L ... 160 L	1LE1011-1A ... -1D	**Standard**				**A**	–
PTC thermistor with 3 temperature sensors			4/2, 8/4	100 L ... 160 L	1LE1011-1A ... -1D	With additional charge				**B**	–
Further motor protection		For price information, code letters and descriptions, see from Page 2/70								■	. . .
Terminal box position			No. of poles	Frame size	Motor type	Version					Order code(s)
Terminal box at top			4/2, 8/4	100 L ... 160 L	1LE1011-1A ... -1D	**Standard**					–
Further terminal box positions		For price information, code numbers and descriptions, see from Page 2/72								**4**	
Special versions											Order code(s)
Options		For price information, order codes and descriptions, see from Page 2/74				**1LE1011-. . . .** ■-■■■■-**Z**					. . .+. . .+. . .+. . .

Note: Pole-changing motors (4-/2-pole) do not comply with the vibration values stipulated in IEC 60034-14 when rigidly installed (see also Page 1/46).

1) Operating values at rated output for 60 Hz are stored in the Drive Technology (DT) Configurator.

2) Types derived from IM B3 (IM B6/7/8, IM V6 and IM V5), from IM B5 (IM V3 and IM V1) and from IM B14 (IM V19 and IM V18) are possible, provided that no requirements exist for condensation drainage holes (**H03**) and stamping of the type on the rating plate. The basic type IM B3, IM B5 or IM B14 is stamped as standard on the rating plate. When ordering with condensation drainage holes (**H03**), the type must be specified.

© Siemens AG 2015

Selection and ordering data

P_{rated1}, 50 Hz	P_{rated2}, 50 Hz	Frame size	Operating values at rated output for N1: n_{rated1}, 50 Hz	T_{rated1}, 50 Hz	η_{rated1}, 50 Hz, 4/4	cos φ_{rated1}, 50 Hz, 4/4	I_{rated1}, 50 Hz, 400 V	T_{LR}/T_{rated1}, 50 Hz	I_{LR}/I_{rated1}, 50 Hz	T_B/T_{rated1}, 50 Hz	Operating values at rated output for N2: n_{rated2}, 50 Hz	T_{rated2}, 50 Hz	η_{rated2}, 50 Hz, 4/4	cos φ_{rated2}, 50 Hz, 4/4	I_{rated2}, 50 Hz, 400 V	T_{LR}/T_{rated2}, 50 Hz	I_{LR}/I_{rated2}, 50 Hz	T_B/T_{rated2}, 50 Hz	**Aluminum series** **1LE1011** – *One winding* **1LE1012** – *Two windings pole-changing for square-law load torque* Article No.	$m_{IM\ B3}$	J	Torque class
kW	kW	FS	rpm	Nm	%		A				rpm	Nm	%		A				▲ New			CL
• **Cooling: self-ventilated (IC411)** • **Line operation: double pole-changing for square-law load torque, e.g. for driving fans** • **Insulation: thermal class 155 (temperature class F), IP55 degree of protection, utilization in accordance with thermal class 130 (temperature class B)**																						
4/2-pole: 1500/3000 rpm at 50 Hz with one winding connected in Dahlander circuit																						
1500 rpm	*3000 rpm*		*1500 rpm*								*3000 rpm*											
0.65	**2.4**	**100 L**	1415	4.4	75	0.86	1.45	1.6	4.1	1.8	2800	8.2	70	0.88	5.6	1.8	4.2	1.8	**1LE1011-1AP4■-■■■■**	18	0.0059	13
0.8	**3.1**	**100 L**	1435	5.3	79	0.85	1.72	1.9	5.2	2.8	2840	10.4	77.3	0.9	6.4	2.1	5.2	2.8	**1LE1011-1AP5■-■■■■**	22	0.0078	13
1.1	**4.4**	**112 M**	1455	7.2	83.4	0.85	2.25	2.2	6.1	2.5	2885	14.6	80.8	0.92	8.5	2.1	6.4	2.5	**1LE1011-1BP2■-■■■■**	27	0.01	13
1.45	**5.9**	**132 S**	1460	9.5	84	0.84	2.95	1.6	5.8	2.8	2875	19.6	80	0.89	12.0	1.8	5.6	2.8	**1LE1011-1CP0■-■■■■**	38	0.019	13
2.0	**8.0**	**132 M**	1455	13.1	85	0.85	4.00	1.8	5.6	2.8	2880	26.5	82	0.92	15.3	1.8	6.3	2.8	**1LE1011-1CP2■-■■■■**	44	0.024	13
2.9	**11.5**	**160 M**	1465	18.9	86.5	0.86	5.6	1.8	5.9	2.9	2870	38.3	82	0.92	22.0	1.8	6	2.9	**1LE1011-1DP2■-■■■■**	62	0.044	13
4.3	**16**	**160 L**	1455	28.2	87	0.85	8.4	1.6	6	2.3	2920	52.3	86	0.94	28.5	1.9	7.1	2.3	**1LE1011-1DP6■-■■■■**	85	0.068	13
6/4-pole: 1000/1500 rpm at 50 Hz with two windings																						
1000 rpm	*1500 rpm*		*1000 rpm*								*1500 rpm*											
0.6	**1.7**	**100 L**	970	5.9	55.5	0.62	2.50	1.7	3.4	2.7	1435	11.3	76.2	0.83	3.90	1.8	4.6	2.7	**1LE1012-1AQ4■-■■■■**	18	0.0059	10
0.8	**2.1**	**100 L**	955	8	64.2	0.77	2.35	1.2	3.4	2	1435	14	78.4	0.84	4.60	2	5.4	2	**1LE1012-1AQ5■-■■■■**	22	0.0078	10
0.9	**3.0**	**112 M**	975	8.8	64.7	0.66	3.05	1.6	3.9	2.5	1455	19.7	81.4	0.78	6.8	2.1	6.4	2.5	**1LE1012-1BQ2■-■■■■**	27	0.01	13
1.2	**3.9**	**132 S**	980	11.7	72.3	0.7	3.40	1.4	4.6	2.5	1455	25.6	83.1	0.83	8.2	1.5	5.7	2.5	**1LE1012-1CQ0■-■■■■**	38	0.019	10
1.7	**5.4**	**132 M**	980	16.6	74.1	0.71	4.65	1.7	5	2.5	1465	35.2	85.9	0.82	11.1	2	6.9	2.5	**1LE1012-1CQ2■-■■■■**	44	0.024	10
2.5	**7.2**	**160 M**	985	24.2	77.7	0.71	6.5	1.5	4.7	2.6	1470	46.8	86.9	0.85	14.1	1.8	6.3	2.6	**1LE1012-1DQ2■-■■■■**	62	0.044	10
3.7	**12.0**	**160 L**	985	35.9	82.4	0.69	9.4	2.3	6.2	3.5	1475	77.7	87.9	0.8	24.5	2.1	7.5	3.5	**1LE1012-1DQ4■-■■■■**	73	0.059	10
6.5	**19**	**180 L**	985	63	81.0	0.7	16.5	1.8	5.5	2.7	1475	123	0.9	0.8	38.0	2.5	8.1	3.7	▲ **1LE1012-1EQ4■-■■■■**	132	0.13	10
9.5	**26**	**200 L**	985	92	84.5	0.7	23.0	2.3	6.5	2.8	1475	168	0.91	0.8	52	2.3	7.5	3.4	▲ **1LE1012-2AQ5■-■■■■**	173	0.20	10

Voltages		No. of poles	Frame size	Motor type	Version			Order code(s)
50 Hz	230 V	4/2, 6/4	100 L ... 200 L	1LE101■-1A ... -2A	**Standard**	2	2	–
50 Hz	400 V	4/2, 6/4	100 L ... 200 L	1LE101■-1A ... -2A	**Standard**	3	4	–
50 Hz	500 V	4/2, 6/4	100 L ... 200 L	1LE101■-1A ... -2A	Without add. charge	4	0	–
50 Hz	690 V	4/2, 6/4	100 L ... 200 L	1LE101■-1A ... -2A	Without add. charge	4	7	–
Further voltages [1]		For price information, code numbers, order codes and descriptions, see from Page 2/59				9	0	. . .

Types of construction		No. of poles	Frame size	Motor type	Version		Order code(s)
Without flange	IM B3 [2]	4/2, 6/4	100 L ... 200 L	1LE101■-1A ... -2A	**Standard**	A	–
With flange	IM B5 [2]	4/2, 6/4	100 L ... 200 L	1LE101■-1A ... -2A	With additional charge	F	–
With standard flange	IM B14 [2]	4/2, 6/4	100 L ... 160 L	1LE101■-1A ... -2A	With additional charge	K	–
Further types of construction		For price information, code letters and descriptions, see from Page 2/62				■	. . .

Motor protection	No. of poles	Frame size	Motor type	Version		Order code(s)
Without	4/2, 6/4	100 L ... 200 L	1LE101■-1A ... -2A	**Standard**	A	–
PTC thermistor with 3 temperature sensors	4/2, 6/4	100 L ... 200 L	1LE101■-1A ... -2A	With additional charge	B	–
Further motor protection	For price information, code letters and descriptions, see from Page 2/70				■	. . .

Terminal box position	No. of poles	Frame size	Motor type	Version		Order code(s)
Terminal box at top	4/2, 6/4	100 L ... 200 L	1LE101■-1A ... -2A	**Standard**	4	–
Further terminal box positions	For price information, code numbers and descriptions, see from Page 2/72					

Special versions			Order code(s)
Options	For price information, order codes and descriptions, see from Page 2/74	**1LE101■-. . . . ■-■■■■-Z**	. . .+. . .+. . .

Note: Pole-changing motors (4-/2-pole) do not comply with the vibration values stipulated in IEC 60034-14 when rigidly installed (see also Page 1/46).

[1] Operating values at rated output for 60 Hz are stored in the Drive Technology (DT) Configurator.

[2] Types derived from IM B3 (IM B6/7/8, IM V6 and IM V5), from IM B5 (IM V3 and IM V1) and from IM B14 (IM V19 and IM V18) are possible, provided that no requirements exist for condensation drainage holes (**H03**) and stamping of the type on the rating plate. The basic type IM B3, IM B5 or IM B14 is stamped as standard on the rating plate. When ordering with condensation drainage holes (**H03**), the type must be specified.

© Siemens AG 2015

Selection and ordering data (continued)

P_{rated1}, 50 Hz	P_{rated2}, 50 Hz	Frame size	Operating values at rated output for N1: n_{rated1}, 50 Hz	T_{rated1}, 50 Hz	η_{rated1}, 50 Hz, 4/4	cos φ_{rated1}, 50 Hz, 4/4	I_{rated1}, 400 V	T_{LR}/T_{rated1}, 50 Hz	I_{LR}/I_{rated1}, 50 Hz	T_B/T_{rated1}, 50 Hz	Operating values at rated output for N2: n_{rated2}, 50 Hz	T_{rated2}, 50 Hz	η_{rated2}, 50 Hz, 4/4	cos φ_{rated2}, 50 Hz, 4/4	I_{rated2}, 400 V	T_{LR}/T_{rated2}, 50 Hz	I_{LR}/I_{rated2}, 50 Hz	T_B/T_{rated2}, 50 Hz	Aluminum series 1LE1011 – One winding Pole-changing for square-law load torque: Article No.	$m_{IM\ B3}$	J	Torque class
kW	kW	FS	rpm	Nm	%		A				rpm	Nm	%		A				▲ New			CL
• Cooling: self-ventilated (IC411) • Line operation: double pole-changing for square-law load torque, e.g. for driving fans • Insulation: thermal class 155 (temperature class F), IP55 degree of protection, utilization in accordance with thermal class 130 (temperature class B)																					
8/4-pole: 750/1500 rpm at 50 Hz with one winding connected in Dahlander circuit																					
750 rpm	*1500 rpm*		*750 rpm*								*1500 rpm*										
0.5	**2.0**	**100 L**	720	6.6	52	0.5	2.80	1.3	3.3	3.4	1440	13.3	82	0.79	4.45	3	7.5	3.4	**1LE1011-1AR4■-■■■■**	22	0.0078	7
0.65	**2.5**	**100 L**	715	8.7	56	0.58	2.90	1	3.2	2.6	1425	16.8	81	0.84	5.3	2.3	6.3	2.6	**1LE1011-1AR5■-■■■■**	22	0.0078	7
0.9	**3.6**	**112 M**	715	12	56	0.57	4.05	1	2.8	2.1	1430	24	82	0.84	7.5	1.9	5.6	2.1	**1LE1011-1BR2■-■■■■**	27	0.01	7
1.1	**4.7**	**132 S**	730	14.4	62	0.54	4.75	1	3.2	2.2	1430	31.4	82	0.86	9.6	1.7	5.2	2.2	**1LE1011-1CR0■-■■■■**	38	0.019	7
1.4	**6.4**	**132 M**	730	18.3	67.5	0.52	5.8	1.1	3.5	2.3	1440	42.4	84.5	0.87	12.6	1.9	5.7	2.3	**1LE1011-1CR2■-■■■■**	44	0.024	7
2.2	**9.5**	**160 M**	730	28.8	80.6	0.63	6.3	1.5	4	2.5	1465	61.9	86.1	0.84	19.0	2	6.3	2.5	**1LE1011-1DR2■-■■■■**	62	0.044	10
3.3	**14**	**160 L**	735	42.9	81.4	0.56	10.4	2.5	4.8	3.3	1475	90.6	85.8	0.73	32.5	2.5	7.2	3.3	**1LE1011-1DR4■-■■■■**	73	0.056	16
4.5	**16**	**180 M**	730	59	79.3	0.59	13.9	1.4	3.8	2.3	1470	104	84.6	0.83	33.0	1.4	7	2.9	▲ **1LE1011-1ER2■-■■■■**	128	0.12	10
5	**18.5**	**180 L**	730	65	78.3	0.6	15.4	1.5	3.8	2.1	1470	120	86.6	0.83	37.0	2.3	7	2.7	▲ **1LE1011-1ER4■-■■■■**	132	0.13	10
7.5	**28**	**200 L**	735	97	85.0	0.6	21.0	1.7	4	2.1	1475	181	90.5	0.85	53	2.7	7.4	3.1	▲ **1LE1011-2AR5■-■■■■**	173	0.20	10

Voltages		No. of poles	Frame size	Motor type	Version			Order code(s)
50 Hz	230 V	8/4	100 L ... 200 L	1LE101■-1A … -2A	**Standard**	**2**	**2**	–
50 Hz	400 V	8/4	100 L ... 200 L	1LE101■-1A … -2A	**Standard**	**3**	**4**	–
50 Hz	500 V	8/4	100 L ... 200 L	1LE101■-1A … -2A	Without add. charge	**4**	**0**	–
50 Hz	690 V	8/4	100 L ... 200 L	1LE101■-1A … -2A	Without add. charge	**4**	**7**	–
Further voltages [1]	For price information, code numbers, order codes and descriptions, see from Page 2/59					**9**	**0**	. . .

Types of construction		No. of poles	Frame size	Motor type	Version		Order code(s)
Without flange	IM B3 [2]	8/4	100 L ... 200 L	1LE101■-1A … -2A	**Standard**	**A**	–
With flange	IM B5 [2]	8/4	100 L ... 200 L	1LE101■-1A … -2A	With additional charge	**F**	–
With standard flange	IM B14 [2]	8/4	100 L ... 160 L	1LE101■-1A … -2A	With additional charge	**K**	–
Further types of construction	For price information, code letters and descriptions, see from Page 2/62					■	. . .

Motor protection	No. of poles	Frame size	Motor type	Version		Order code(s)
Without	8/4	100 L ... 200 L	1LE101■-1A … -2A	**Standard**	**A**	–
PTC thermistor with 3 temperature sensors	8/4	100 L ... 200 L	1LE101■-1A … -2A	With additional charge	**B**	–
Further motor protection	For price information, code letters and descriptions, see from Page 2/70				■	. . .

Terminal box position	No. of poles	Frame size	Motor type	Version		Order code(s)
Terminal box at top	8/4	100 L ... 200 L	1LE101■-1A … -2A	**Standard**	**4**	–
Further terminal box positions	For price information, code numbers and descriptions, see from Page 2/72					

Special versions			Order code(s)
Options	For price information, order codes and descriptions, see from Page 2/74	**1LE101■-. . . . ■-■■■■-Z**	. . .+. . .+. . .

Note: Pole-changing motors (4-/2-pole) do not comply with the vibration values stipulated in IEC 60034-14 when rigidly installed (see also Page 1/46).

[1] Operating values at rated output for 60 Hz are stored in the Drive Technology (DT) Configurator.

[2] Types derived from IM B3 (IM B6/7/8, IM V6 and IM V5), from IM B5 (IM V3 and IM V1) and from IM B14 (IM V19 and IM V18) are possible, provided that no requirements exist for condensation drainage holes (**H03**) and stamping of the type on the rating plate. The basic type IM B3, IM B5 or IM B14 is stamped as standard on the rating plate. When ordering with condensation drainage holes (**H03**), the type must be specified.

© Siemens AG 2015

Selection and ordering data

Voltages	Voltage code 12th and 13th position of the Article No.		Additional identification code with order code and plain text if required	Motor category								
				Motor version	**Motor type (alum.)**	**Motor type – frame size**						
						80	**90**	**100**	**112**	**132**	**160**	**180**	**200**
				IE2 High Efficiency	1LE1001	**1LE1001** ①							
					1PC1001			**1PC1001** ②					
					1LE1041	**1LE1041 APAC Line** ③							
				IE3 Premium Efficiency	1LE1003	**1LE1003** ④							
					1LE1043	**1LE1043 APAC Line** ⑤							
				IE4 Super Premium Efficiency	1LE1004			**1LE1004** ⑥					
				IE1 Standard Efficiency	1LE1002			**1LE1002** ⑦					
					1PC1002			**1PC1002** ⑧					
				NEMA Energy Efficient	1LE1021	**1LE1021 Eagle Line** ⑨							
				NEMA Premium Efficient	1LE1023	**1LE1023 Eagle Line** ⑩							
1LE10 . . - . . . . ■ - ■ . . .				Motor version	Motor type	Frame size							
1PC10 . . - . . . . ■ - ■ . . .			Order code			80	90	100	112	132	160	180	200
Voltage at 50 Hz or 60 Hz – Operating values at rated output for 60 Hz are stored in the Drive Technology Configurator (DTC)													
50 Hz 230 VΔ/400 VY, 60 Hz 460 VY	**2**	**2**	–	All	All	□	□	□	□	□	□	□	□
50 Hz 400 VΔ/690 VY, 60 Hz 460 VΔ [1]	**3**	**4**	–	All except ③, ⑤, ⑨ and ⑩		□	□	□	□	□	□	□	□
50 Hz 400 VΔ, 60 Hz 460 VΔ [1]				Only applicable for ③, ⑤, ⑨ and ⑩		□	□	□	□	□	□	□	□
50 Hz 400 VY, 60 Hz 460 VY [2] [3]	**0**	**2**		All except ⑥		□	□	–	–	–	–	–	–
50 Hz 500 VY [6] 60 Hz 575 VY	**2**	**7**	–	All except ⑥		○	○	○	○	○	○	○	○
50 Hz 500 VΔ 60 Hz 575 VΔ	**4**	**0**	–	All except ⑥		–	–	○	○	○	○	○	○
50 Hz 220 VΔ/380 VY 60 Hz 440 VY	**2**	**1**	–	All	All	✓	✓	✓	✓	✓	✓	✓	✓
50 Hz 380 VΔ/660 VY [1], 60 Hz 440 VΔ	**3**	**3**	–	All except ③, ⑤, ⑨ and ⑩		✓	✓	✓	✓	✓	✓	✓	✓
50 Hz 380 VΔ [1]				Only applicable for ③, ⑤, ⑨ and ⑩		–	–	✓	✓	✓	✓	✓	✓
50 Hz 240 VΔ/415 VY, 60 Hz 480 VY	**2**	**3**	–	All	All	✓	✓	✓	✓	✓	✓	✓	✓
50 Hz 415 VΔ, 60 Hz 480 VΔ	**3**	**5**	–	All	All	✓	✓	✓	✓	✓	✓	✓	✓
Multi-voltage at 60 Hz and required output at 60 Hz													
60 Hz 230 VYY/460 VY; 50 Hz output, 9 main terminals and electrical design to NEMA	**6**	**0**	–	All except ②, ③, ⑦ and ⑧		–	–	–	–	–	–	✓	✓
60 Hz 230 VYY/460 VY; 60 Hz output, 9 main terminals and electrical design to NEMA	**6**	**1**	–	All except ②, ③, ⑦ and ⑧		–	–	–	–	–	–	✓	✓
60 Hz 230 VΔΔ/460 VΔ; 50 Hz output, 12 main terminals and electrical design to NEMA	**6**	**2**	–	All except ②, ③, ⑦ and ⑧		–	–	–	–	–	–	✓	✓
60 Hz 230 VΔΔ/460 VΔ; 60 Hz output, 12 main terminals and electrical design to NEMA	**6**	**3**	–	All except ②, ③, ⑦ and ⑧		–	–	–	–	–	–	✓	✓
Voltage at 60 Hz and required output at 60 Hz													
220 VΔ/380 VY; 50 Hz output	**9**	**0**	**M2A**	All	All	✓	✓	✓	✓	✓	✓	✓	✓
220 VΔ/380 VY; 60 Hz output	**9**	**0**	**M1A**	All except ③, ⑤, ⑨ and ⑩		✓	✓	✓	✓	✓	✓	✓	✓
380 VΔ/660 VY; 50 Hz output [1]	**9**	**0**	**M2B**	All except ③, ⑤, ⑨ and ⑩		✓	✓	✓	✓	✓	✓	✓	✓
380 VΔ; 50 Hz output [1]				Only applicable for ③, ⑤, ⑨ and ⑩		–	–	✓	✓	✓	✓	✓	✓
380 VΔ/660 VY; 60 Hz output [1]	**9**	**0**	**M1B**	All except ③, ⑤, ⑨ and ⑩		✓	✓	✓	✓	✓	✓	✓	✓
440 VY; 50 Hz output	**9**	**0**	**M2C**	All	All	✓	✓	✓	✓	✓	✓	✓	✓
440 VY; 60 Hz output	**9**	**0**	**M1C**	All except ③, ⑤, ⑨ and ⑩		✓	✓	✓	✓	✓	✓	✓	✓
440 VΔ; 50 Hz output	**9**	**0**	**M2D**	All	All	✓	✓	✓	✓	✓	✓	✓	✓
440 VΔ; 60 Hz output	**9**	**0**	**M1D**	All except ③, ⑤, ⑨ and ⑩		✓	✓	✓	✓	✓	✓	✓	✓
460 VY; 50 Hz output	**9**	**0**	**M2E**	All	All	✓	✓	✓	✓	✓	✓	✓	✓
460 VY; 60 Hz output	**9**	**0**	**M1E**	All except ③, ⑤, ⑨ and ⑩		○	○	○	○	○	○	○	○
460 VΔ; 50 Hz output	**9**	**0**	**M2F**	All	All	✓	✓	✓	✓	✓	✓	✓	✓

For legends and footnotes, see Page 2/58.

© Siemens AG 2015

Voltages · Aluminum series 1LE10, 1PC10

Voltages	Voltage code 12th and 13th position of the Article No.		Additional identification code with order code and plain text if required	Motor category: Motor version	Motor type (alum.)	Motor type – frame size 80	90	100	112	132	160	180	200
				Motor version	**Motor type (alum.)**	**80**	**90**	**100**	**112**	**132**	**160**	**180**	**200**
				IE2 High Efficiency	1LE1001	**1LE1001** ①							
					1PC1001			**1PC1001** ②					
					1LE1041	**1LE1041 APAC Line** ③							
				IE3 Premium Efficiency	1LE1003	**1LE1003** ④							
					1LE1043	**1LE1043 APAC Line** ⑤							
				IE4 Super Premium Efficiency	1LE1004			**1LE1004** ⑥					
				IE1 Standard Efficiency	1LE1002			**1LE1002** ⑦					
					1PC1002			**1PC1002** ⑧					
				NEMA Energy Efficient	1LE1021	**1LE1021 Eagle Line** ⑨							
				NEMA Premium Efficient	1LE1023	**1LE1023 Eagle Line** ⑩							
1LE10 . . - . . . . ■ - ■ . . .				Motor version	Motor type	Frame size 80	90	100	112	132	160	180	200
1PC10 . . - . . . . ■ - ■ . . .			Order code										
Voltage at 60 Hz and required output at 60 Hz (continued)													
460 VΔ; 60 Hz output	**9**	**0**	**M1F**	All except ③, ⑤, ⑨ and ⑩		○	○	○	○	○	○	○	○
575 VY; 50 Hz output [6]	**9**	**0**	**M2G**	All except ⑥		✓	✓	✓	✓	✓	✓	✓	✓
575 VY; 60 Hz output [6]	**9**	**0**	**M1G**	All except ③, ⑤, ⑥, ⑨ and ⑩		✓	✓	✓	✓	✓	✓	✓	✓
575 VΔ; 50 Hz output [6]	**9**	**0**	**M2H**	All except ⑥		✓	✓	✓	✓	✓	✓	✓	✓
575 VΔ; 60 Hz output [6]	**9**	**0**	**M1H**	All except ③, ⑤, ⑥, ⑨ and ⑩		✓	✓	✓	✓	✓	✓	✓	✓
Voltage at 87 Hz and 87 Hz output													
400 VΔ [4]	**9**	**0**	**M3A**	All	All	✓	✓	✓	✓	✓	✓	✓	✓
Non-standard voltage and/or frequencies													
Non-standard winding [5]	**9**	**0**	**M1Y** • and customer specifications	All	All	✓	✓	✓	✓	✓	✓	✓	✓

- ◘ Standard version
- ○ Without additional charge
- • This order code only determines the price of the version – Additional plain text is required.
- ✓ With additional charge
- – Not possible

1) For North America export versions Eagle Line 1LE1021 NEMA Energy Efficient and 1LE1023 NEMA Premium Efficient, voltages above 600 V will not be stamped.

2) Frame sizes 80 and 90 with voltage code 02 can only be supplied without motor protection (motor protection code A).

3) Delta connection is not possible.

4) Only possible for 4-pole, 6-pole and 8-pole motors. The operating data for converter operation is also provided in a table on the rating plate.

5) Plain text must be specified in the order: Voltage between 200 and 690 V (voltages outside this range are available on request), frequency, circuit, for 60 Hz additionally required rated output in kW.

6) Not possible for 2-pole and 4-pole motors with increased output (11th position of Article No.: 6) in frame sizes 80 and 90.

© Siemens AG 2015

Selection and ordering data

Voltages	Voltage code 12th and 13th position of the Article No.		Additional identification code with order code and plain text if required	Motor category							
				Motor version	**Motor type (alum.)**	**Motor type – frame size**					
						100	**112**	**132**	**160**	**180**	**200**
				Pole-changing	1LE1011	**1LE1011**					
					1LE1012	**1LE1012**					
				Motor version	Motor type	Frame size					
1LE1. . . - . . . . ■ - ■ . . .			Order code			100	112	132	160	180	200
Voltage at 50 Hz and 50 Hz output											
230 V	**2**	**2**	**–**	All	All	□	□	□	□	□	□
400 V	**3**	**4**	**–**	All	All	□	□	□	□	□	□
500 V	**4**	**0**	**–**	All	All	○	○	○	○	○	○
690 V	**4**	**7**	**–**	All	All	○	○	○	○	○	○
Voltage at 60 Hz and required output											
220 V; 50 Hz output	**9**	**0**	**M5K**	All	All	O. R.	O. R.	O. R.	O. R.	O. R.	O. R.
220 V; 60 Hz output	**9**	**0**	**M5C**	All	All	O. R.	O. R.	O. R.	O. R.	O. R.	O. R.
380 V; 50 Hz output	**9**	**0**	**M5L**	All	All	O. R.	O. R.	O. R.	O. R.	O. R.	O. R.
380 V; 60 Hz output	**9**	**0**	**M5D**	All	All	O. R.	O. R.	O. R.	O. R.	O. R.	O. R.
440 V; 50 Hz output	**9**	**0**	**M5M**	All	All	O. R.	O. R.	O. R.	O. R.	O. R.	O. R.
440 V; 60 Hz output	**9**	**0**	**M5E**	All	All	O. R.	O. R.	O. R.	O. R.	O. R.	O. R.
460 V; 50 Hz output	**9**	**0**	**M5N**	All	All	O. R.	O. R.	O. R.	O. R.	O. R.	O. R.
460 V; 60 Hz output	**9**	**0**	**M5F**	All	All	O. R.	O. R.	O. R.	O. R.	O. R.	O. R.
575 V; 50 Hz output	**9**	**0**	**M5P**	All	All	O. R.	O. R.	O. R.	O. R.	O. R.	O. R.
575 V; 60 Hz output	**9**	**0**	**M5G**	All	All	O. R.	O. R.	O. R.	O. R.	O. R.	O. R.
Non-standard voltage and/or frequencies											
Non-standard winding [1]	**9**	**0**	**M1Y** • and customer specifications	All	All	✓	✓	✓	✓	✓	✓

□ Standard version
○ Without additional charge
• This order code only determines the price of the version – Additional plain text is required.
✓ With additional charge
O. R. Possible on request

[1] Plain text must be specified in the order: Voltage between 200 and 690 V (voltages outside this range are available on request), frequency, circuit, for 60 Hz additionally required rated output in kW.

© Siemens AG 2015

Voltages · Cast-iron series 1LE15 Basic Line, 1LE16 Performance Line

Selection and ordering data

Voltages	Voltage code 12th and 13th position of the Article No.		Additional identification code with order code and plain text if required	Motor category														
				Motor version	**Motor type (cast-iron)**	**Motor type – frame size**												
						71	**80**	**90**	**100**	**112**	**132**	**160**	**180**	**200**	**225**	**250**	**280**	**315**
				IE2 High Efficiency	1LE1501	**1LE1501 Basic Line ①**												
					1LE1601				**1LE1601 Performance Line ②**									
					1LE1541								**1LE1541 APAC Line ③**					
				IE3 Premium Efficiency	1LE1503	**1LE1503 Basic Line ④**												
					1LE1603				**1LE1603 Performance Line ⑤**									
					1LE1543									**1LE1543 Basic Line ⑥**				
					1LE1643									**1LE1643 Performance Line ⑦**				
				IE4 Super Premium Efficiency	1LE1504				**1LE1504 Basic Line ⑧**									
					1LE1604				**1LE1604 Performance Line ⑨**									
				NEMA Energy Efficient	1LE1521	**1LE1521 Eagle Line Basic ⑩**												
					1LE1621				**1LE1621 Eagle Line Performance ⑪**									
				NEMA Premium Efficient	1LE1523	**1LE1523 Eagle Line Basic ⑫**												
					1LE1623				**1LE1623 Eagle Line Performance ⑬**									
1LE1. . . - . . . . ■ - ■ . . .			Order code	Motor version	Motor type	Frame size												
						71	80	90	100	112	132	160	180	200	225	250	280	315
Voltage at 50 Hz or 60 Hz																		
50 Hz 230 VΔ/400 VY, 60 Hz 460 VY	**2**	**2**	**–**	All	All	◘	◘	◘	◘	◘	◘	◘	◘	◘	◘	◘	◘	◘
50 Hz 400 VΔ/690 VY, 60 Hz 460 VΔ [1]	**3**	**4**	**–**	All except ③, ⑥, ⑦, ⑩, ⑪, ⑫ and ⑬		◘	◘	◘	◘	◘	◘	◘	◘	◘	◘	◘	◘	◘
50 Hz 400 VΔ, 60 Hz 460 VΔ [1]				Only applicable for ③, ⑥, ⑦, ⑩, ⑪, ⑫ and ⑬		◘	◘	◘	◘	◘	◘	◘	◘	◘	◘	◘	◘	◘
50 Hz 500 VY/575 VY	**2**	**7**	**–**	All, not possible for ⑧ and ⑨ frame sizes 100 … 160		○	○	○	○	○	○	○	○	○	○	○	○	○
50 Hz 500 VΔ, 60 Hz 575 VΔ	**4**	**0**	**–**	All	All	–	–	–	○	○	○	○	○	○	○	○	○	○
50 Hz 220 VΔ/380 VY, 60 Hz 440 VY	**2**	**1**	**–**	All	All	✓	✓	✓	✓	✓	✓	✓	✓	✓	✓	✓	✓	✓
50 Hz 380 VΔ/660 VY, 60 Hz 440 VΔ [1]	**3**	**3**	**–**	All except ⑧, ⑥, ⑦, ⑩, ⑪, ⑫ and ⑬		✓	✓	✓	✓	✓	✓	✓	✓	✓	✓	✓	✓	✓
50 Hz 380 VΔ [1]				Only applicable for ③, ⑥, ⑦, ⑩, ⑪, ⑫ and ⑬		✓	✓	✓	✓	✓	✓	✓	✓	✓	✓	✓	✓	✓
50 Hz 240 VΔ/415 VY, 60 Hz 480 VY	**2**	**3**	**–**	All	All	✓	✓	✓	✓	✓	✓	✓	✓	✓	✓	✓	✓	✓
50 Hz 415 VΔ, 60 Hz 480 VΔ	**3**	**5**	**–**	All	All	✓	✓	✓	✓	✓	✓	✓	✓	✓	✓	✓	✓	✓
Voltage at 60 Hz and required output																		
220 VΔ/380 VY; 50 Hz output	**9**	**0**	**M2A**	All	All	✓	✓	✓	✓	✓	✓	✓	✓	✓	✓	✓	✓	✓
220 VΔ/380 VY; 60 Hz output [2]	**9**	**0**	**M1A**	All except ③, ⑥, ⑦, ⑩, ⑪, ⑫ and ⑬		✓	✓	✓	✓	✓	✓	✓	✓	✓	✓	✓	✓	✓
380 VΔ/660 VY; 50 Hz output [1]	**9**	**0**	**M2B**	All except ③, ⑥, ⑦, ⑩, ⑪, ⑫ and ⑬		–	–	–	✓	✓	✓	✓	✓	✓	✓	✓	✓	✓
380 VΔ; 50 Hz output [1]				Only applicable for ③, ⑥, ⑦, ⑩, ⑪, ⑫ and ⑬		–	–	–	✓	✓	✓	✓	✓	✓	✓	✓	✓	✓
380 VΔ/660 VY; 60 Hz output [1] [2]	**9**	**0**	**M1B**	All except ③, ⑥, ⑦, ⑩, ⑪, ⑫ and ⑬		–	–	–	✓	✓	✓	✓	✓	✓	✓	✓	✓	✓
440 VY; 50 Hz output	**9**	**0**	**M2C**	All	All	–	–	–	✓	✓	✓	✓	✓	✓	✓	✓	✓	✓

For legends and footnotes, see Page 2/61.

© Siemens AG 2015

Voltages · Cast-iron series 1LE15 Basic Line, 1LE16 Performance Line

Voltages	Voltage code 12th and 13th position of the Article No.		Additional identification code with order code and plain text if required	Motor category														
				Motor version	**Motor type (cast-iron)**	**Motor type – frame size**												
						71	**80**	**90**	**100**	**112**	**132**	**160**	**180**	**200**	**225**	**250**	**280**	**315**
				IE2 High Efficiency	1LE1501	**1LE1501 Basic Line** ①												
					1LE1601				**1LE1601 Performance Line** ②									
					1LE1541								**1LE1541 APAC Line** ③					
				IE3 Premium Efficiency	1LE1503	**1LE1503 Basic Line** ④												
					1LE1603				**1LE1603 Performance Line** ⑤									
					1LE1543									**1LE1543 Basic Line** ⑥				
					1LE1643									**1LE1643 Performance Line** ⑦				
				IE4 Super Premium Efficiency	1LE1504				**1LE1504 Basic Line** ⑧									
					1LE1604				**1LE1604 Performance Line** ⑨									
				NEMA Energy Efficient	1LE1521	**1LE1521 Eagle Line Basic** ⑩												
					1LE1621				**1LE1621 Eagle Line Performance** ⑪									
				NEMA Premium Efficient	1LE1523	**1LE1523 Eagle Line Basic** ⑫												
					1LE1623				**1LE1623 Eagle Line Performance** ⑬									
1LE1. . . - . . . . ■ - ■ . . .			Order code	Motor version	Motor type	Frame size												
						71	80	90	100	112	132	160	180	200	225	250	280	315
Voltage at 60 Hz and required output (continued)																		
440 VY; 60 Hz output [2]	**9**	**0**	**M1C**	All except ③, ⑥, ⑦, ⑩, ⑪, ⑫ and ⑬		–	–	–	✓	✓	✓	✓	✓	✓	✓	✓	✓	✓
440 VΔ; 50 Hz output	**9**	**0**	**M2D**	All	All	–	–	–	✓	✓	✓	✓	✓	✓	✓	✓	✓	✓
440 VΔ; 60 Hz output [2]	**9**	**0**	**M1D**	All except ③, ⑥, ⑦, ⑩, ⑪, ⑫ and ⑬		–	–	–	✓	✓	✓	✓	✓	✓	✓	✓	✓	✓
460 VY; 50 Hz output	**9**	**0**	**M2E**	All	All	–	–	–	✓	✓	✓	✓	✓	✓	✓	✓	✓	✓
460 VY; 60 Hz output [2]	**9**	**0**	**M1E**	All except ③, ⑥, ⑦, ⑩, ⑪, ⑫ and ⑬		–	–	–	○	○	○	○	○	○	○	○	○	○
460 VΔ; 50 Hz output	**9**	**0**	**M2F**	All	All	–	–	–	✓	✓	✓	✓	✓	✓	✓	✓	✓	✓
460 VΔ; 60 Hz output [2]	**9**	**0**	**M1F**	All except ③, ⑥, ⑦, ⑩, ⑪, ⑫ and ⑬		–	–	–	○	○	○	○	○	○	○	○	○	○
575 VY; 50 Hz output	**9**	**0**	**M2G**	All, not possible for ⑧ and ⑨ frame sizes 100 … 160		–	–	–	✓	✓	✓	✓	✓	✓	✓	✓	✓	✓
575 VY; 60 Hz output [2]	**9**	**0**	**M1G**	All except ③, ⑩, ⑪, ⑫ and ⑬; not possible for ⑧ and ⑨ frame sizes 100 … 160		–	–	–	✓	✓	✓	✓	✓	✓	✓	✓	✓	✓
575 VΔ; 50 Hz output	**9**	**0**	**M2H**	All, not possible for ⑧ and ⑨ frame sizes 100 … 160		–	–	–	✓	✓	✓	✓	✓	✓	✓	✓	✓	✓
575 VΔ; 60 Hz output [2]	**9**	**0**	**M1H**	All except ③, ⑩, ⑪, ⑫ and ⑬; not possible for ⑧ and ⑨ frame sizes 100 … 160		–	–	–	✓	✓	✓	✓	✓	✓	✓	✓	✓	✓
Voltage at 87 Hz and 87 Hz output																		
400 VΔ [3]	**9**	**0**	**M3A**	All	All	✓	✓	✓	✓	✓	✓	✓	✓	✓	✓	✓	✓	✓
Non-standard voltage and/or frequencies																		
Non-standard winding [4]	**9**	**0**	**M1Y** • and customer specifications	All	All	✓	✓	✓	✓	✓	✓	✓	✓	✓	✓	✓	✓	✓

■ Standard version
○ Without additional charge
• This order code only determines the price of the version – Additional plain text is required.
✓ With additional charge
O. R. Possible on request

1) For North America export versions Eagle Line 1LE1521/1LE1621 NEMA Energy Efficient and 1LE1523/1LE1623 NEMA Premium Efficient, voltages above 600 V will not be stamped.

2) Not admissible for North America export versions Eagle Line 1LE1521/1LE1621 NEMA Energy Efficient and 1LE1523/1LE1623 NEMA Premium Efficient.

3) Only possible for 4-pole, 6-pole and 8-pole motors. The operating data for converter operation is also provided in a table on the rating plate.

4) Plain text must be specified in the order: Voltage between 200 and 690 V (voltages outside this range are available on request), frequency, circuit, for 60 Hz additionally required rated output in kW.

© Siemens AG 2015

2

Selection and ordering data

Types of construction		Type of construction letter 14th position of the Article No.	For types of construction with order code(s) Article No. with additional identification code -Z	Motor category								
				Motor version	**Motor type (alum.)**	**Motor type – frame size** 80	90	100	112	132	160	180	200
				IE2 High Efficiency	1LE1001	**1LE1001** ①							
					1PC1001			**1PC1001** ②					
					1LE1041	**1LE1041 APAC Line** ③							
				IE3 Premium Efficiency	1LE1003	**1LE1003** ④							
					1LE1043	**1LE1043 APAC Line** ⑤							
				IE4 Super Premium Efficiency	1LE1004			**1LE1004** ⑥					
				IE1 Standard Efficiency	1LE1002			**1LE1002** ⑦					
					1PC1002			**1PC1002** ⑧					
				NEMA Energy Efficient	1LE1021	**1LE1021 Eagle Line** ⑨							
				NEMA Premium Efficient	1LE1023	**1LE1023 Eagle Line** ⑩							
				Pole-changing	1LE1011			**1LE1011** ⑪					
					1LE1012			**1LE1012** ⑫					
1LE10 . . - . . . . . - . ■ . . (-Z)				Motor version	Motor type	Frame size 80	90	100	112	132	160	180	200
1PC10 . . - . . . . . - . ■ . . (-Z)			Order code										
Without flange													
IM B3 [1) 2) 3)]	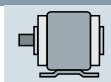	**A**	–	All except ③ and ⑨		□	□	□	□	□	□	□	□
IM B6 [2) 3)]	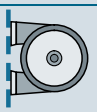	**T**	–	All except ③ and ⑨		□	□	□	□	□	□	□	□
IM B7 [2) 3)]		**U**	–	All except ③ and ⑨		□	□	□	□	□	□	□	□
IM B8 [2) 3)]		**V**	–	All except ③ and ⑨		□	□	□	□	□	□	□	□
IM V6 [2) 3)]	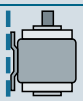	**D**	–	All except ③ and ⑨		□	□	□	□	□	□	□	□
IM V5 without protective cover [2) 3)]	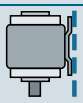	**C**	–	All except ③ and ⑨		□	□	□	□	□	□	□	□
IM V5 with protective cover [2) 3) 4) 5) 6)]	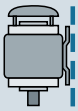	**C**	**H00**	All except ②, ③, ⑧, ⑨ and in combination with order code F90		✓	✓	✓	✓	✓	✓	✓	✓
With flange		**Acc. to EN 50347 Acc. to DIN 42948**				**FF165 A 200**	**FF165 A 200**	**FF215 A 250**	**FF215 A 250**	**FF265 A 300**	**FF300 A 350**	**FF300 A 350**	**FF350 A 400**
IM B5 [2) 7)]	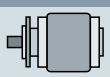	**F**	–	All	All	✓	✓	✓	✓	✓	✓	✓	✓
IM V1 without protective cover [2)]	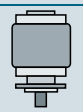	**G**	–	All	All	✓	✓	✓	✓	✓	✓	✓	✓
IM V1 with protective cover [2) 4) 5) 6)]	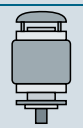	**G**	**H00**	All except ②, ⑧ and in combination with order code F90		✓	✓	✓	✓	✓	✓	✓	✓
IM V3 [4)]		**H**	–	All	All	✓	✓	✓	✓	✓	✓	✓	✓
IM B35 [3)]	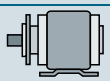	**J**	–	All except ③ and ⑨		✓	✓	✓	✓	✓	✓	✓	✓

For legends and footnotes, see Page 2/65.

© Siemens AG 2015

Types of construction		Type of construction letter 14th position of the Article No.	For types of construction with order code(s) Article No. with additional identification code **-Z**	Motor category								
				Motor version	**Motor type (alum.)**	**Motor type – frame size**						
						80	**90**	**100**	**112**	**132**	**160**	**180**	**200**
				IE2 High Efficiency	1LE1001	**1LE1001** ①							
					1PC1001			**1PC1001** ②					
					1LE1041	**1LE1041 APAC Line** ③							
				IE3 Premium Efficiency	1LE1003	**1LE1003** ④							
					1LE1043	**1LE1043 APAC Line** ⑤							
				IE4 Super Premium Efficiency	1LE1004			**1LE1004** ⑥					
				IE1 Standard Efficiency	1LE1002			**1LE1002** ⑦					
					1PC1002			**1PC1002** ⑧					
				NEMA Energy Efficient	1LE1021	**1LE1021 Eagle Line** ⑨							
				NEMA Premium Efficient	1LE1023	**1LE1023 Eagle Line** ⑩							
				Pole-changing	1LE1011			**1LE1011** ⑪					
					1LE1012			**1LE1012** ⑫					
1LE10 . . - . . . . . - . ■ . . (-Z) **1PC10 . . - . . . . . - . ■ . . (-Z)**			Order code	Motor version	Motor type	Frame size							
						80	90	100	112	132	160	180	200
With special flange next larger		**Acc. to EN 50347** **Acc. to DIN 42948**				**–** **–**	**–** **–**	**FF265** **A 300**	**FF265** **A 300**	**FF300** **A 350**	**–** **–**	**–** **–**	**–** **–**
IM B5 [2) 7)]	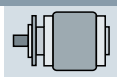	**F**	**P01**	All	All	–	–	✓	✓	✓	–	–	–
IM V1 without protective cover [2)]	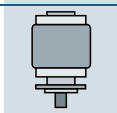	**G**	**P01**	All	All	–	–	✓	✓	✓	–	–	–
IM V1 with protective cover [2) 4) 5) 6)]	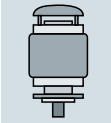	**G**	**P01+H00**	All except ②, ⑧ and in combination with order code F90		–	–	✓	✓	✓	–	–	–
IM V3 [4)]	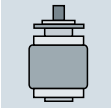	**H**	**P01**	All	All	–	–	✓	✓	✓	–	–	–
IM B35 [3)]	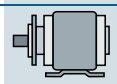	**J**	**P01**	All except ③ and ⑨		–	–	✓	✓	✓	–	–	–
With special flange next smaller		**Acc. to EN 50347** **Acc. to DIN 42948**				**–** **–**	**–** **–**	**FF165** **A 200**	**FF165** **A 200**	**FF215** **A 250**	**FF265** **A 300**	**FF265** **A 300**	**FF300** **A 350**
IM B5 [2) 7)]	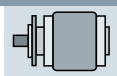	**F**	**P02**	All	All	–	–	O. R.	O. R.	O. R.	O. R.	O. R.	O. R.
IM V1 without protective cover [2)]	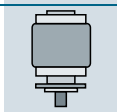	**G**	**P02**	All	All	–	–	O. R.	O. R.	O. R.	O. R.	O. R.	O. R.
IM V1 with protective cover [2) 4) 5) 6)]	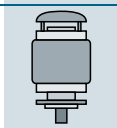	**G**	**P02+H00**	All except ②, ⑧ and in combination with order code F90		–	–	O. R.	O. R.	O. R.	O. R.	O. R.	O. R.
IM V3 [4)]		**H**	**P02**	All	All	–	–	O. R.	O. R.	O. R.	O. R.	O. R.	O. R.
IM B35 [3)]	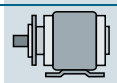	**J**	**P02**	All except ③ and ⑨		–	–	O. R.	O. R.	O. R.	O. R.	O. R.	O. R.

For legends and footnotes, see Page 2/65.

© Siemens AG 2015

Supplements to article numbers and special versions
SIMOTICS GP 1LE1/1PC1 Standard Motors

Types of construction · Aluminum series 1LE10, 1PC10

Types of construction	Type of construction letter 14th position of the Article No.	For types of construction with order code(s) Article No. with additional identification code -Z	Motor category								
			Motor version	**Motor type (alum.)**	**Motor type – frame size**						
					80	**90**	**100**	**112**	**132**	**160**	**180**	**200**
			IE2 High Efficiency	1LE1001	**1LE1001** ①							
				1PC1001			**1PC1001** ②					
				1LE1041	**1LE1041 APAC Line** ③							
			IE3 Premium Efficiency	1LE1003	**1LE1003** ④							
				1LE1043	**1LE1043 APAC Line** ⑤							
			IE4 Super Premium Efficiency	1LE1004			**1LE1004** ⑥					
			IE1 Standard Efficiency	1LE1002			**1LE1002** ⑦					
				1PC1002			**1PC1002** ⑧					
			NEMA Energy Efficient	1LE1021	**1LE1021 Eagle Line** ⑨							
			NEMA Premium Efficient	1LE1023	**1LE1023 Eagle Line** ⑩							
			Pole-changing	1LE1011			**1LE1011** ⑪					
				1LE1012			**1LE1012** ⑫					
1LE10 . . - . . . . . - . ■ . . (-Z) **1PC10 . . - . . . . . - . ■ . . (-Z)**		Order code	Motor version	Motor type	Frame size							
					80	90	100	112	132	160	180	200
With standard flange		**Acc. to EN 50347** **Acc. to DIN 42948**			**FT100** **C 120**	**FT115** **C 140**	**FT130** **C 160**	**FT130** **C 160**	**FT165** **C 200**	**FT215** **C 250**	**–** **–**	**–** **–**
IM B14 [2) 8)]		**K** –	All	All	✓	✓	✓	✓	✓	✓	–	–
IM V19 [2)]		**L** –	All	All	✓	✓	✓	✓	✓	✓	–	–
IM V18 without protective cover [2)]		**M** –	All	All	✓	✓	✓	✓	✓	✓	–	–
IM V18 with protective cover [2) 4) 5) 6)]		**M** **H00**	All except ②, ⑧ and in combination with order code F90		✓	✓	✓	✓	✓	✓	–	–
IM B34 [3)]	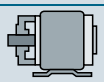	**N** –	All except ③ and ⑨		✓	✓	✓	✓	✓	✓	–	–
With special flange next larger		**Acc. to EN 50347** **Acc. to DIN 42948**			**FT130** **C 160**	**FT130** **C 160**	**FT165** **C 200**	**FT165** **C 200**	**FT215** **C 250**	**–** **–**	**–** **–**	**–** **–**
IM B14 [2) 8)]	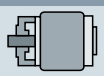	**K** **P01**	All	All	✓	✓	✓	✓	✓	–	–	–
IM V19 [2)]	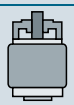	**L** **P01**	All	All	✓	✓	✓	✓	✓	–	–	–
IM V18 without protective cover [2)]	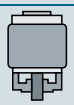	**M** **P01**	All	All	✓	✓	✓	✓	✓	–	–	–
IM V18 with protective cover [2) 4) 5) 6)]	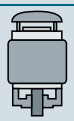	**M** **P01+H00**	All except ②, ⑧ and in combination with order code F90		✓	✓	✓	✓	✓	–	–	–
IM B34 [3)]	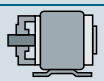	**N** **P01**	All except ③ and ⑨		✓	✓	✓	✓	✓	–	–	–

For legends and footnotes, see Page 2/65.

© Siemens AG 2015

Types of construction		Type of construction letter 14th position of the Article No.	For types of construction with order code(s) Article No. with additional identification code **-Z**	Motor category								
				Motor version	**Motor type (alum.)**	**Motor type – frame size**						
						80	**90**	**100**	**112**	**132**	**160**	**180**	**200**
				IE2 High Efficiency	1LE1001	**1LE1001** ①							
					1PC1001			**1PC1001** ②					
					1LE1041	**1LE1041 APAC Line** ③							
				IE3 Premium Efficiency	1LE1003	**1LE1003** ④							
					1LE1043	**1LE1043 APAC Line** ⑤							
				IE4 Super Premium Efficiency	1LE1004			**1LE1004** ⑥					
				IE1 Standard Efficiency	1LE1002			**1LE1002** ⑦					
					1PC1002			**1PC1002** ⑧					
				NEMA Energy Efficient	1LE1021	**1LE1021 Eagle Line** ⑨							
				NEMA Premium Efficient	1LE1023	**1LE1023 Eagle Line** ⑩							
				Pole-changing	1LE1011			**1LE1011** ⑪					
					1LE1012			**1LE1012** ⑫					
1LE10 . . - . . . . . - . ■ . . (-Z) **1PC10 . . - . . . . . - . ■ . . (-Z)**			Order code	Motor version	Motor type	Frame size							
						80	90	100	112	132	160	180	200
With special flange next smaller		**Acc. to EN 50347** **Acc. to DIN 42948**				**–** **–**	**–** **–**	**FT115** **C 140**	**FT115** **C 140**	**FT130** **C 160**	**FT165** **C 200**	**–** **–**	**–** **–**
IM B14 [2) 8)]	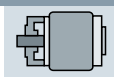	**K**	**P02**	All except ⑥		–	–	O. R.	O. R.	O. R.	O. R.	–	–
IM V19 [2)]	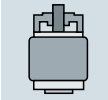	**L**	**P02**	All except ⑥		–	–	O. R.	O. R.	O. R.	O. R.	–	–
IM V18 without protective cover [2)]	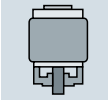	**M**	**P02**	All except ⑥		–	–	O. R.	O. R.	O. R.	O. R.	–	–
IM V18 with protective cover [2) 4) 5) 6)]	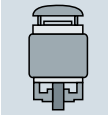	**M**	**P02+H00**	All except ②, ⑥ and ⑧ and in combination with order code F90		–	–	O. R.	O. R.	O. R.	O. R.	–	–
IM B34 [3)]	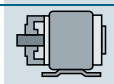	**N**	**P02**	All except ③, ⑥ and ⑨		–	–	O. R.	O. R.	O. R.	O. R.	–	–

□ Standard version
✓ With additional charge
– Not possible
O. R. Possible on request

1) The types of construction IM B6/7/8, IM V6 and IM V5 with/without protective cover are also possible as long as no condensation drainage holes (order code **H03**) and no stamping of these types of construction on the rating plate are required. As standard the type of construction IM B3 is then stamped on the rating plate. With type of construction IM V5 with protective cover, the protective cover has to be additionally ordered with order code **H00**. The protective cover is not stamped on the rating plate.

2) The type of construction is stamped on the rating plate. When ordering with condensation drainage holes (order code **H03**), if mounted in a different position, the position must be specified to ensure that the condensation drainage holes are positioned correctly.

3) For North America export version Eagle Line 1LE1021 NEMA Energy Efficient, types of construction with feet are not possible for 2-pole, 4-pole and 6-pole motors ≤ 200 hp in accordance with NEMA MG1 Table 12-11.

4) The "Standard cylindrical shaft extension" option (order code **L05**) is not possible.

5) In combination with an encoder it is not necessary to order the protective cover (order code **H00**), as this is delivered as a protection for the encoder as standard. In this case the protective cover is standard version (without additional charge).

6) Not possible for 1PC1 naturally cooled motors and 1LE1 forced-air cooled motors with order code **F90** without external fan and fan cover.

7) The types of construction IM V3 and IM V1 with/without protective cover are also possible as long as no condensation drainage holes (order code **H03**) and no stamping of these types of construction on the rating plate are required. As standard the type of construction IM B5 is then stamped on the rating plate. With type of construction IM V1 with protective cover, the protective cover has to be additionally ordered with order code **H00**. The protective cover is not stamped on the rating plate.

8) The types of construction IM V19 and IM V18 with/without protective cover are also possible as long as no condensation drainage holes (order code **H03**) and no stamping of these types of construction on the rating plate are required. As standard the type of construction IM B14 is then stamped on the rating plate. With type of construction IM V18 with protective cover, the protective cover has to be additionally ordered with order code **H00**. The protective cover is not stamped on the rating plate.

© Siemens AG 2015

2

Selection and ordering data

Types of construction	Type of construc. letter 14th pos. of Article No.	For types of construction with order code(s) Article No. with additional identification code **-Z**	Motor category																
			Motor version	**Motor type (cast-iron)**	**Motor type – frame size** 71	80	90	100	112	132	160	180	200	225	250	280	315 S/M	315 L 2-pole	315 L 4-pole, 6-pole, 8-pole
			IE2 High Efficiency	1LE1501	**1LE1501 Basic Line ①**														
				1LE1601				**1LE1601 Performance Line ②**											
				1LE1541								**1LE1541 APAC Line ③**							
			IE3 Premium Efficiency	1LE1503	**1LE1503 Basic Line ④**														
				1LE1603				**1LE1603 Performance Line ⑤**											
				1LE1543									**1LE1543 Basic Line ⑥**						
				1LE1643									**1LE1643 Performance Line ⑦**						
			IE4 Super Premium Efficiency	1LE1504				**1LE1504 Basic Line ⑧**											
				1LE1604				**1LE1604 Performance Line ⑨**											
			NEMA Energy Efficient	1LE1521	**1LE1521 Eagle Line Basic ⑩**														
				1LE1621				**1LE1621 Eagle Line Performance ⑪**											
			NEMA Premium Efficient	1LE1523	**1LE1523 Eagle Line Basic ⑫**														
				1LE1623				**1LE1623 Eagle Line Performance ⑬**											
1LE1. . . - . . . . . - . ■ . . (-Z)		Order code	Motor version	Motor type	Frame size 71	80	90	100	112	132	160	180	200	225	250	280	315 S/M	315 L 2-pole	315 L 4-pole, 6-pole, 8-pole
Without flange																			
IM B3 1) 2) 3)	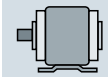	**A**	–	All except ③, ⑩, ⑪ 2, 4, 6-pole ≤ 200 hp and ⑫, ⑬ 8-pole ≤ 200 hp	□	□	□	□	□	□	□	□	□	□	□	□	□	□	□
IM B6 2) 3)	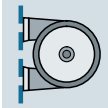	**T**	–	All except ③, ⑩, ⑪ 2, 4, 6-pole ≤ 200 hp and ⑫, ⑬ 8-pole ≤ 200 hp	□	□	□	□	□	□	□	□	□	□	□	□	□	□	□
IM B7 2) 3)	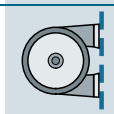	**U**	–	All except ③, ⑩, ⑪ 2, 4, 6-pole ≤ 200 hp and ⑫, ⑬ 8-pole ≤ 200 hp	□	□	□	□	□	□	□	□	□	□	□	□	□	□	□
IM B8 2) 3)	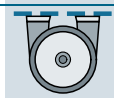	**V**	–	All except ③, ⑩, ⑪ 2, 4, 6-pole ≤ 200 hp and ⑫, ⑬ 8-pole ≤ 200 hp	□	□	□	□	□	□	□	□	□	□	□	□	□	□	□
IM V6 2) 3)	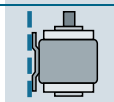	**D**	–	All except ③, ⑩, ⑪ 2, 4, 6-pole ≤ 200 hp and ⑫, ⑬ 8-pole ≤ 200 hp	□	□	□	□	□	□	□	□	□	□	□	□	□	✓	□
IM V5 without protective cover 2) 3)	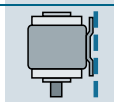	**C**	–	All except ③, ⑩, ⑪ 2, 4, 6-pole ≤ 200 hp and ⑫, ⑬ 8-pole ≤ 200 hp	□	□	□	□	□	□	□	□	□	□	□	□	□	✓	□
IM V5 with protective cover 2) 3) 4) 5)	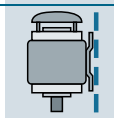	**C**	**H00**	All except ③, ⑩, ⑪ 2, 4, 6-pole ≤ 200 hp and ⑫, ⑬ 8-pole ≤ 200 hp	✓	✓	✓	✓	✓	✓	✓	✓	✓	✓	✓	✓	✓	✓	✓

For legends and footnotes, see Page 2/69.

© Siemens AG 2015

Types of construction · Cast-iron series 1LE15 Basic Line, 1LE16 Performance Line

Types of construction	Type of construc. letter 14th pos. of Article No.	For types of construction with order code(s) Article No. with additional identification code **-Z**	Motor category																
			Motor version	**Motor type (cast-iron)**	**Motor type – frame size** 71	80	90	100	112	132	160	180	200	225	250	280	315 S/M	315 L 2-pole	315 L 4-pole, 6-pole, 8-pole
			IE2 High Efficiency	1LE1501	1LE1501 Basic Line ①														
				1LE1601				1LE1601 Performance Line ②											
				1LE1541								1LE1541 APAC Line ③							
			IE3 Premium Efficiency	1LE1503	1LE1503 Basic Line ④														
				1LE1603				1LE1603 Performance Line ⑤											
				1LE1543									1LE1543 Basic Line ⑥						
				1LE1643									1LE1643 Performance Line ⑦						
			IE4 Super Premium Efficiency	1LE1504				1LE1504 Basic Line ⑧											
				1LE1604				1LE1604 Performance Line ⑨											
			NEMA Energy Efficient	1LE1521	1LE1521 Eagle Line Basic ⑩														
				1LE1621				1LE1621 Eagle Line Performance ⑪											
			NEMA Premium Efficient	1LE1523	1LE1523 Eagle Line Basic ⑫														
				1LE1623				1LE1623 Eagle Line Performance ⑬											
1LE1. . . - . . . . . - . ■ . . (-Z) Order code			Motor version	Motor type	Frame size 71	80	90	100	112	132	160	180	200	225	250	280	315 S/M	315 L 2-pole	315 L 4-pole, 6-pole, 8-pole
With flange		**Acc. to EN 50347**			FF130	FF165	FF165	FF215	FF215	FF265	FF300	FF300	FF350	FF400	FF500	FF500	FF600	FF600	FF600
		Acc. to DIN 42948			A 160	A 200	A 200	A 250	A 250	A 300	A 350	A 350	A 400	A 450	A 550	A 550	A 660	A 660	A 660
IM B5 2) 6)	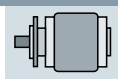	**F**	**–**	All	All	✓	✓	✓	✓	✓	✓	✓	✓	✓	✓	✓	✓	✓	–	–
IM V1 without protective cover 2)	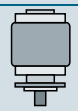	**G**	**–**	All	All	✓	✓	✓	✓	✓	✓	✓	✓	✓	✓	✓	✓	✓	✓
IM V1 with protective cover 2) 4) 5)	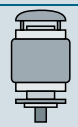	**G**	**H00**	All	All	✓	✓	✓	✓	✓	✓	✓	✓	✓	✓	✓	✓	✓	✓
IM V3 5)		**H**	**–**	All	All	✓	✓	✓	✓	✓	✓	✓	✓	✓	✓	✓	✓	–	–
IM B35 3)	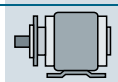	**J**	**–**	All except ③, ⑩, ⑪ 2, 4, 6-pole ≤ 200 hp and ⑫, ⑬ 8-pole ≤ 200 hp		✓	✓	✓	✓	✓	✓	✓	✓	✓	✓	✓	✓	✓	✓	✓
With special flange next larger		**Acc. to EN 50347**			–	–	–	FF265	FF265	FF300	–	–	–	–	–	–	–	–	–
		Acc. to DIN 42948			–	–	–	A 300	A 300	A 350	–	–	–	–	–	–	–	–	–
IM B5 2) 6)	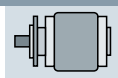	**F**	**P01**	All	All	–	–	–	✓	✓	✓	–	–	–	–	–	–	–	–	–
IM V1 without protective cover 2)	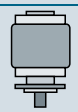	**G**	**P01**	All	All	–	–	–	✓	✓	✓	–	–	–	–	–	–	–	–	–
IM V1 with protective cover 2) 4) 5)	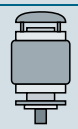	**G**	**P01+ H00**	All	All	–	–	–	✓	✓	✓	–	–	–	–	–	–	–	–	–
IM V3 5)		**H**	**P01**	All	All	–	–	–	✓	✓	✓	–	–	–	–	–	–	–	–	–
IM B35 3)	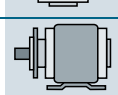	**J**	**P01**	All except ③, ⑩, ⑪ 2, 4, 6-pole ≤ 200 hp and ⑫, ⑬ 8-pole ≤ 200 hp; for ⑧ and ⑨ on request		–	–	–	✓	✓	✓	–	–	–	–	–	–	–	–	–

For legends and footnotes, see Page 2/69.

© Siemens AG 2015

Types of construction · Cast-iron series 1LE15 Basic Line, 1LE16 Performance Line

2

Types of construction		Type of construc. letter 14th pos. of Article No.	For types of construction with order code(s) Article No. with additional identification code -Z	Motor category																
				Motor version	**Motor type (cast-iron)**	**Motor type – frame size** 71	80	90	100	112	132	160	180	200	225	250	280	315 S/M	315 L 2-pole	315 L 4-pole, 6-pole, 8-pole
				IE2 High Efficiency	1LE1501	1LE1501 Basic Line ①														
					1LE1601				1LE1601 Performance Line ②											
					1LE1541								1LE1541 APAC Line ③							
				IE3 Premium Efficiency	1LE1503	1LE1503 Basic Line ④														
					1LE1603				1LE1603 Performance Line ⑤											
					1LE1543									1LE1543 Basic Line ⑥						
					1LE1643									1LE1643 Performance Line ⑦						
				IE4 Super Premium Efficiency	1LE1504				1LE1504 Basic Line ⑧											
					1LE1604				1LE1604 Performance Line ⑨											
				NEMA Energy Efficient	1LE1521	1LE1521 Eagle Line Basic ⑩														
					1LE1621				1LE1621 Eagle Line Performance ⑪											
				NEMA Premium Efficient	1LE1523	1LE1523 Eagle Line Basic ⑫														
					1LE1623				1LE1623 Eagle Line Performance ⑬											
1LE1. . . - . . . . . - . ■ . . (-Z)		Order code		Motor version	Motor type	Frame size 71	80	90	100	112	132	160	180	200	225	250	280	315 S/M	315 L 2-pole	315 L 4-pole, 6-pole, 8-pole
With special flange next smaller		**Acc. to EN 50347**				–	–	–	FF165	FF165	FF215	FF265	–	–	–	–	–	–	–	–
		Acc. to DIN 42948				–	–	–	A 200	A 200	A 250	A 300	–	–	–	–	–	–	–	–
IM B5 2) 6)	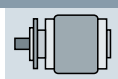	**F**	**P02**	All	All	–	–	–	O. R.	O. R.	O. R.	O. R.	–	–	–	–	–	–	–	–
IM V1 without protective cover 2)		**G**	**P02**	All	All	–	–	–	O. R.	O. R.	O. R.	O. R.	–	–	–	–	–	–	–	–
IM V1 with protective cover 2) 4) 5)	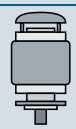	**G**	**P02+ H00**	All	All	–	–	–	O. R.	O. R.	O. R.	O. R.	–	–	–	–	–	–	–	–
IM V3 5)		**H**	**P02**	All	All	–	–	–	O. R.	O. R.	O. R.	O. R.	–	–	–	–	–	–	–	–
IM B35 3)	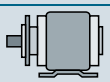	**J**	**P02**	All except ③, ⑩, ⑪ 2, 4, 6-pole ≤ 200 hp and ⑫, ⑬ 8-pole ≤ 200 hp		–	–	–	O. R.	O. R.	O. R.	O. R.	–	–	–	–	–	–	–	–
With flange		**Acc. to EN 50347**				FT85	FT100	FT115	FT130	FT130	FT165	FT215	–	–	–	–	–	–	–	–
		Acc. to DIN 42948				C 105	C 120	C 140	C 160	C 160	C 200	C 250	–	–	–	–	–	–	–	–
IM B14 2) 7)	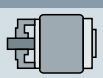	**K**	**–**	All	All	✓	✓	✓	✓	✓	✓	✓	–	–	–	–	–	–	–	–
IM V19 2)	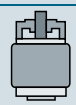	**L**	**–**	All	All	✓	✓	✓	✓	✓	✓	✓	–	–	–	–	–	–	–	–
IM V18 without protective cover 2)	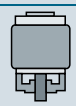	**M**	**–**	All	All	✓	✓	✓	✓	✓	✓	✓	–	–	–	–	–	–	–	–
IM V18 with protective cover 2) 4) 5)	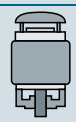	**M**	**H00**	All	All	✓	✓	✓	✓	✓	✓	✓	–	–	–	–	–	–	–	–
IM B34 3)	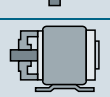	**N**	**–**	All except ③, ⑩, ⑪ 2, 4, 6-pole ≤ 200 hp and ⑫, ⑬ 8-pole ≤ 200 hp		✓	✓	✓	✓	✓	✓	✓	–	–	–	–	–	–	–	–

For legends and footnotes, see Page 2/69.

© Siemens AG 2015

Types of construction · Cast-iron series 1LE15 Basic Line, 1LE16 Performance Line

Motor version	Motor type (cast-iron)	Motor type – frame size 71	80	90	100	112	132	160	180	200	225	250	280	315 S/M	315 L 2-pole	315 L 4-pole, 6-pole, 8-pole
IE2 High Efficiency	1LE1501	1LE1501 Basic Line ①														
	1LE1601				1LE1601 Performance Line ②											
	1LE1541								1LE1541 APAC Line ③							
IE3 Premium Efficiency	1LE1503	1LE1503 Basic Line ④														
	1LE1603				1LE1603 Performance Line ⑤											
	1LE1543									1LE1543 Basic Line ⑥						
	1LE1643									1LE1643 Performance Line ⑦						
IE4 Super Premium Efficiency	1LE1504				1LE1504 Basic Line ⑧											
	1LE1604				1LE1604 Performance Line ⑨											
NEMA Energy Efficient	1LE1521	1LE1521 Eagle Line Basic ⑩														
	1LE1621				1LE1621 Eagle Line Performance ⑪											
NEMA Premium Efficient	1LE1523	1LE1523 Eagle Line Basic ⑫														
	1LE1623				1LE1623 Eagle Line Performance ⑬											

Types of construction	Type of construc. letter 14th pos. of Article No.	For types of construction with order code(s) Article No. with additional identification code **-Z**	Motor version	Motor type	Frame size 71	80	90	100	112	132	160	180	200	225	250	280	315 S/M	315 L 2-pole	315 L 4-pole, 6-pole, 8-pole
1LE1. . . - . . . . . - . ■ . . (-Z)		Order code																	
With special flange next larger		**Acc. to EN 50347** / **Acc. to DIN 42948**			**FT100** / **C 120**	**FT115** / **C 140**	**FT130** / **C 160**	**FT165** / **C 200**	**FT165** / **C 200**	**FT215** / **C 250**	– / –	– / –	– / –	– / –	– / –	– / –	– / –	– / –	– / –
IM B14 2) 7) 8)	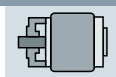	**K** **P01**	All	All	✓	✓	✓	✓	✓	✓	–	–	–	–	–	–	–	–	–
IM V19 2) 8)	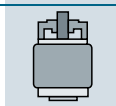	**L** **P01**	All	All	✓	✓	✓	✓	✓	✓	–	–	–	–	–	–	–	–	–
IM V18 without protective cover 2) 8)	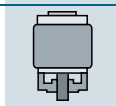	**M** **P01**	All	All	✓	✓	✓	✓	✓	✓	–	–	–	–	–	–	–	–	–
IM V18 with protective cover 2) 4) 5) 8)	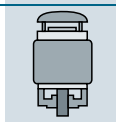	**M** **P01+ H00**	All	All	✓	✓	✓	✓	✓	✓	–	–	–	–	–	–	–	–	–
IM B34 3) 8)	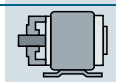	**N** **P01**	All except ③, ⑩, ⑪ 2, 4, 6-pole ≤ 200 hp and ⑫, ⑬ 8-pole ≤ 200 hp		✓	✓	✓	✓	✓	✓	–	–	–	–	–	–	–	–	–

■ Standard version
✓ With additional charge
O. R. Possible on request
– Not possible

1) The types of construction IM B6/7/8, IM V6 and IM V5 with/without protective cover are also possible as long as no stamping of these types of construction on the rating plate is required. As standard the type of construction IM B3 is then stamped on the rating plate. With type of construction IM V5 with protective cover, the protective cover has to be additionally ordered with order code **H00**. The protective cover is not stamped on the rating plate.

2) The type of construction is stamped on the rating plate. If mounted in a different position, the position must be specified to ensure that the condensation drainage holes are positioned correctly.

3) For North America export version Eagle Line 1LE1521/1LE1621 NEMA Energy Efficient, types of construction with feet are not possible for 2-pole, 4-pole and 6-pole motors ≤ 200 hp in accordance with NEMA MG1 Table 12-11.

4) In combination with an encoder it is not necessary to order the protective cover (order code **H00**), as this is delivered as a protection for the encoder as standard. In this case the protective cover is standard design (without extra price).

5) The "Standard cylindrical shaft extension" option (order code **L05**) is not possible.

6) The types of construction IM V3 and IM V1 with/without protective cover are also possible as long as no stamping of these types of construction on the rating plate is required. As standard the type of construction IM B5 is then stamped on the rating plate. With type of construction IM V1 with protective cover, the protective cover has to be additionally ordered with order code **H00**. The protective cover is not stamped on the rating plate.

7) The types of construction IM V19 and IM V18 with/without protective cover are also possible as long as no stamping of these types of construction on the rating plate is required. As standard the type of construction IM B14 is then stamped on the rating plate. With type of construction IM V18 with protective cover, the protective cover has to be additionally ordered with order code **H00**. The protective cover is not stamped on the rating plate.

8) The flange installed for frame sizes 71 and 80 is 2 sizes larger (according to standard).

© Siemens AG 2015

2

Selection and ordering data

Motor protection	Motor protection letter 15th position in Article No.	Additional identification code with order code and plain text if required	Motor category								
			Motor version	**Motor type (alum.)**	**Motor type – frame size**						
					80	**90**	**100**	**112**	**132**	**160**	**180**	**200**
			IE2 High Efficiency	1LE1001	**1LE1001**							
				1PC1001			**1PC1001**					
				1LE1041	**1LE1041 APAC Line**							
			IE3 Premium Efficiency	1LE1003	**1LE1003**							
				1LE1043	**1LE1043 APAC Line**							
			IE4 Super Premium Efficiency	1LE1004			**1LE1004**					
			IE1 Standard Efficiency	1LE1002			**1LE1002**					
				1PC1002			**1PC1002**					
			NEMA Energy Efficient	1LE1021	**1LE1021 Eagle Line**							
			NEMA Premium Efficient	1LE1023	**1LE1023 Eagle Line**							
			Pole-changing	1LE1011			**1LE1011**					
				1LE1012			**1LE1012**					
1LE10 . . - . . . . . - . . ■ .			Motor version	Motor type	Frame size							
1PC10 . . - . . . . . - . . ■ .		Order code			80	90	100	112	132	160	180	200
Motor protection (winding protection)												
Without motor protection [1]	**A**	**–**	All	All	□	□	□	□	□	□	□	□
Motor protection with PTC thermistors with 1 or 3 embedded temperature sensors for tripping [2]	**B**	**–**	All	All	✓	✓	✓	✓	✓	✓	✓	✓
Motor protection by PTC thermistors with 2 or 6 embedded temperature sensors for alarm and tripping [2]	**C**	**–**	All	All	✓	✓	✓	✓	✓	✓	✓	✓
Motor temperature detection with embedded temperature sensor KTY 84-130 [2]	**F**	**–**	All	All	✓	✓	✓	✓	✓	✓	✓	✓
Motor temperature detection with embedded temperature sensor 2 × KTY 84-130 [2]	**G**	**–**	All	All	✓	✓	✓	✓	✓	✓	✓	✓
Installation of 3 Pt100 resistance thermometers [2]	**H**	**–**	All	All	–	–	✓	✓	✓	✓	✓	✓
NTC thermistors for tripping	**Z**	**Q2A**	All	All	–	–	✓	✓	✓	✓	–	–
Temperature detectors for tripping [2]	**Z**	**Q3A**	All	All	✓	✓	✓	✓	✓	✓	✓	✓

□ Standard version
✓ With additional charge
– Not possible

[1] Frame sizes 80 and 90 with voltage code 02 can only be supplied without motor protection (motor protection code A).

[2] Evaluation with appropriate tripping unit (see Catalog IC 10) is recommended. For pole-changing motors, double the number of temperature sensors or temperature detectors is required. This also results in a double additional charge.

© Siemens AG 2015

Selection and ordering data

Motor protection	Motor protection letter 15th position in Article No.	Additional identification code with order code and plain text if required	Motor category: Motor version	Motor type (cast-iron)	Motor type – frame size: 71	80	90	100	112	132	160	180	200	225	250	280	315
			IE2 High Efficiency	1LE1501	1LE1501 Basic Line ①												
				1LE1601				1LE1601 Performance Line ②									
				1LE1541								1LE1541 APAC Line ③					
			IE3 Premium Efficiency	1LE1503	1LE1503 Basic Line ④												
				1LE1603				1LE1603 Performance Line ⑤									
				1LE1543									1LE1543 Basic Line ⑥				
				1LE1643									1LE1643 Performance Line ⑦				
			IE4 Super Premium Efficiency	1LE1504				1LE1504 Basic Line ⑧									
				1LE1604				1LE1604 Performance Line ⑨									
			NEMA Energy Efficient	1LE1521	1LE1521 Eagle Line Basic ⑩												
				1LE1621				1LE1621 Eagle Line Performance ⑪									
			NEMA Premium Efficient	1LE1523	1LE1523 Eagle Line Basic ⑫												
				1LE1623				1LE1623 Eagle Line Performance ⑬									
1LE1. . . - . . . . . - . . ■ .		Order code	Motor version	Motor type	Frame size: 71	80	90	100	112	132	160	180	200	225	250	280	315
Motor protection (winding protection)																	
Without motor protection [1]	**A**	**–**	All except ②, ⑤, ⑦, ⑨, ⑪ and ⑬		□	□	□	□	□	□	□	□	□	□	□	□	□
Motor protection by PTC thermistors with 1 or 3 embedded temperature sensors for tripping [1] [2]	**B**	**–**	Standard version for Performance Line ②, ⑤, ⑦, ⑨, ⑪ and ⑬		✓	✓	✓	✓	✓	✓	✓	✓	✓	✓	✓	✓	✓
Motor protection by PTC thermistors with 2 or 6 embedded temperature sensors for alarm and tripping [2]	**C**	**–**	All	All	✓	✓	✓	✓	✓	✓	✓	✓	✓	✓	✓	✓	✓
Motor temperature detection with embedded temperature sensor KTY 84-130 [2]	**F**	**–**	All	All	✓	✓	✓	✓	✓	✓	✓	✓	✓	✓	✓	✓	✓
Motor temperature detection with embedded temperature sensor 2 × KTY 84-130 [2]	**G**	**–**	All	All	✓	✓	✓	✓	✓	✓	✓	✓	✓	✓	✓	✓	✓
Installation of 3 Pt100 resistance thermometers	**H**	**–**	All	All	✓	✓	✓	✓	✓	✓	✓	✓	✓	✓	✓	✓	✓
Installation of 6 Pt100 resistance thermometers	**J**	**–**	All	All	–	–	–	–	–	–	–	✓	✓	✓	✓	✓	✓
NTC thermistors for tripping	**Z**	**Q2A**	All	All	✓	✓	✓	✓	✓	✓	✓	–	–	–	–	–	–
Temperature detectors for tripping [2]	**Z**	**Q3A**	All	All	✓	✓	✓	✓	✓	✓	✓	✓	✓	✓	✓	✓	✓

□ Standard version
✓ With additional charge
– Not possible

Note:

Options are available specifically for bearing protection –
For order codes and descriptions, see from Page 2/80.

[1] For the Performance Line, motor protection by means of PTC thermistors with 3 built-in temperature sensors for tripping (motor protection code B) is already included in the basic price. For the Performance Line, the option "without motor protection" (motor protection code A) is not possible.

[2] Evaluation with appropriate tripping unit (see Catalog IC 10) is recommended.

© Siemens AG 2015

2

Selection and ordering data

Terminal box position	Terminal box position code 16th position of the Article No.	Additional identification code with order code and plain text if required	Motor category	Motor version	Motor type (alum.)	Motor type – frame size 80	90	100	112	132	160	180	200
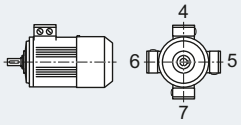				IE2 High Efficiency	1LE1001	**1LE1001**							
					1PC1001			**1PC1001**					
					1LE1041	**1LE1041 APAC Line**							
				IE3 Premium Efficiency	1LE1003	**1LE1003**							
					1LE1043	**1LE1043 APAC Line**							
				IE4 Super Premium Efficiency	1LE1004			**1LE1004**					
				IE1 Standard Efficiency	1LE1002			**1LE1002**					
					1PC1002			**1PC1002**					
				NEMA Energy Efficient	1LE1021	**1LE1021 Eagle Line**							
				NEMA Premium Efficient	1LE1023	**1LE1023 Eagle Line**							
				Pole-changing	1LE1011			**1LE1011**					
					1LE1012			**1LE1012**					
1LE10 . . - . . . . . - . . . ■			Motor version		Motor type	Frame size 80	90	100	112	132	160	180	200
1PC10 . . - . . . . . - . . . ■		Order code											
Terminal box position													
Terminal box top [1]	**4**	–	All		All	□	□	□	□	□	□	□	□
Terminal box on RHS [2]	**5**	–	All		All	✓	✓	✓	✓	✓	✓	✓	✓
Terminal box on LHS [2]	**6**	–	All		All	✓	✓	✓	✓	✓	✓	✓	✓
Terminal box at bottom [2] [3]	**7**	–	All		All	–	–	✓	✓	✓	✓	–	–

□ Standard version
✓ With additional charge
– Not possible

1) For types of construction with feet up to and including frame size 160, cast feet are standard. Screwed-on feet are available with order code **H01**. Frame sizes 180 and 200 are fitted as standard with screwed-on feet.

2) For types of construction with feet, screwed-on feet are standard.

3) Not generally possible for motors with feet.

© Siemens AG 2015

Selection and ordering data

Terminal box position

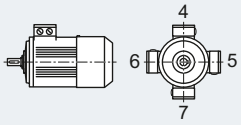

Terminal box position code 16th position of the Article No.	Additional identification code with order code and plain text if required	Motor category: Motor version	Motor type (cast-iron)	Motor type – frame size 71	80	90	100	112	132	160	180	200	225	250	280	315
		IE2 High Efficiency	1LE1501	1LE1501 Basic Line												
			1LE1601				1LE1601 Performance Line									
			1LE1541								1LE1541 APAC Line					
		IE3 Premium Efficiency	1LE1503	1LE1503 Basic Line												
			1LE1603				1LE1603 Performance Line									
			1LE1543									1LE1543 Basic Line				
			1LE1643									1LE1643 Performance Line				
		IE4 Super Premium Efficiency	1LE1504				1LE1504 Basic Line									
			1LE1604				1LE1604 Performance Line									
		NEMA Energy Efficient	1LE1521	1LE1521 Eagle Line Basic												
			1LE1621				1LE1621 Eagle Line Performance									
		NEMA Premium Efficient	1LE1523	1LE1523 Eagle Line Basic												
			1LE1623				1LE1623 Eagle Line Performance									

1LE1. . . - . . . . . - . . . ■		Order code	Motor version	Motor type	Frame size 71	80	90	100	112	132	160	180	200	225	250	280	315
Terminal box position																	
Terminal box top [1]	**4**	–	All	All	□	□	□	□	□	□	□	□	□	□	□	□	□
Terminal box on RHS [2]	**5**	–	All	All	–	✓	✓	✓	✓	✓	✓	✓	✓	✓	✓	✓	✓
Terminal box on LHS [2]	**6**	–	All	All	–	✓	✓	✓	✓	✓	✓	✓	✓	✓	✓	✓	✓
Terminal box at bottom [3]	**7**	–	All	All	–	–	–	✓	✓	✓	✓	–	–	–	–	–	–

□ Standard version
✓ With additional charge
– Not possible

[1] For types of construction with feet and flange-mounted with feet, cast feet are standard. Screwed-on feet are available with order code **H01**.

[2] For types of construction with feet and flange-mounted with feet, screwed-on feet are standard. Except for frame sizes 225, 250, 280 and 315: in which case for types of construction with feet and flange-mounted with feet, cast feet are standard. Screwed-on feet are available with order code **H01**.

[3] Not generally possible for motors with feet.

© Siemens AG 2015

2

Selection and ordering data

Special versions	Additional identification code **-Z** with order code and plain text if required	Motor category								
		Motor version	**Motor type (alum.)**	**Motor type – frame size**						
				80	**90**	**100**	**112**	**132**	**160**	**180**	**200**
		IE2 High Efficiency	1LE1001	**1LE1001** ①							
			1PC1001			**1PC1001** ②					
			1LE1041	**1LE1041 APAC Line** ③							
		IE3 Premium Efficiency	1LE1003	**1LE1003** ④							
			1LE1043	**1LE1043 APAC Line** ⑤							
		IE4 Super Premium Efficiency	1LE1004			**1LE1004** ⑥					
		IE1 Standard Efficiency	1LE1002			**1LE1002** ⑦					
			1PC1002			**1PC1002** ⑧					
		NEMA Energy Efficient	1LE1021	**1LE1021 Eagle Line** ⑨							
		NEMA Premium Efficient	1LE1023	**1LE1023 Eagle Line** ⑩							
		Pole-changing	1LE1011			**1LE1011** ⑪					
			1LE1012			**1LE1012** ⑫					
1LE10 . . - . . . . . - . . . . -Z **1PC10 . . - . . . . . - . . . . -Z**	Order code	Motor version	Motor type	Frame size 80	90	100	112	132	160	180	200
Motor connection and terminal box											
External grounding	**H04**	All	All	✓	✓	✓	✓	✓	✓	✓	✓
Terminal box on NDE [3]	**H08**	All	All	✓	✓	✓	✓	✓	✓	✓	✓
Rotation of the terminal box through 90°, entry from DE [1]	**R10**	All	All	○	○	○	○	○	○	✓	✓
Rotation of the terminal box through 90°, entry from NDE	**R11**	All	All	○	○	○	○	○	○	✓	✓
Rotation of the terminal box through 180°	**R12**	All	All	○	○	○	○	○	○	✓	✓
One metal cable gland	**R15**	All	All	✓	✓	✓	✓	✓	✓	✓	✓
Cable gland, maximum configuration	**R18**	All	All	–	–	–	–	–	–	✓	✓
3 cables protruding, 0.5 m long [4][5]	**R20**	All except ⑪ and ⑫		✓	✓	✓	✓	✓	✓	–	–
3 cables protruding, 1.5 m long [4][5]	**R21**	All except ⑪ and ⑫		✓	✓	✓	✓	✓	✓	O. R.	O. R.
6 cables protruding, 0.5 m long [4]	**R22**	All	All	✓	✓	✓	✓	✓	✓	–	–
6 cables protruding, 1.5 m long [4]	**R23**	All	All	✓	✓	✓	✓	✓	✓	O. R.	O. R.
6 cables protruding, 3 m long [4]	**R24**	All	All	✓	✓	✓	✓	✓	✓	O. R.	O. R.
Reduction piece for M cable gland in accordance with British Standard, both cable entries mounted [2]	**R30**	All	All	–	–	✓	✓	✓	✓	–	–
Larger terminal box	**R50**	All, standard version for Eagle Line ⑨ and ⑩ < Size 100		✓	✓	✓	✓	✓	✓	✓	✓
Auxiliary terminal box, aluminum	**R60** *New!*	All	All	–	–	–	–	–	–	✓	✓
Motor connector Han-Drive 10e for 230 VΔ/400 VY [30]	**R70**	All	All	✓	✓	✓	✓	✓	–	–	–
Motor connector Han-Drive 10e EMC for 230 VΔ/400 VY [30]	**R71**	All	All	✓	✓	✓	✓	✓	–	–	–
Small motor connector CQ12 with EMC	**R72**	All	All	✓	✓	–	–	–	–	–	–
Small motor connector CQ12 without EMC	**R73**	All	All	✓	✓	–	–	–	–	–	–
6-piece terminal board	**R76** *New!*	All, only possible for 2 and 4-pole motors, not possible for ⑥		○	○	–	–	–	–	–	–
Windings and insulation											
Temperature class 155 (F), utilized acc. to 155 (F), with service factor (SF)	**N01**	All	All	–	–	✓	✓	✓	✓	✓	✓
Temperature class 155 (F), utilized acc. to 155 (F), with increased output	**N02**	All	All	–	–	✓	✓	✓	✓	✓	✓
Temperature class 155 (F), utilized acc. to 155 (F), with increased coolant temperature	**N03**	All	All	✓	✓	✓	✓	✓	✓	✓	✓
Temperature class 155 (F), utilized acc. to 130 (B), coolant temperature 45 °C, derating approx. 4 %	**N05**	All	All	✓	✓	✓	✓	✓	✓	✓	✓
Temperature class 155 (F), utilized acc. to 130 (B), coolant temperature 50 °C, derating approx. 8 %	**N06**	All	All	✓	✓	✓	✓	✓	✓	✓	✓
Temperature class 155 (F), utilized acc. to 130 (B), coolant temperature 55 °C, derating approx. 13 %	**N07**	All	All	✓	✓	✓	✓	✓	✓	✓	✓

For legends and footnotes, see Page 2/79.

© Siemens AG 2015

Special versions	Additional identification code **-Z** with order code and plain text if required	Motor category								
		Motor version	**Motor type (alum.)**	**Motor type – frame size** 80	90	100	112	132	160	180	200
		IE2 High Efficiency	1LE1001	**1LE1001** ①							
			1PC1001			**1PC1001** ②					
			1LE1041	**1LE1041 APAC Line** ③							
		IE3 Premium Efficiency	1LE1003	**1LE1003** ④							
			1LE1043	**1LE1043 APAC Line** ⑤							
		IE4 Super Premium Efficiency	1LE1004			**1LE1004** ⑥					
		IE1 Standard Efficiency	1LE1002			**1LE1002** ⑦					
			1PC1002			**1PC1002** ⑧					
		NEMA Energy Efficient	1LE1021	**1LE1021 Eagle Line** ⑨							
		NEMA Premium Efficient	1LE1023	**1LE1023 Eagle Line** ⑩							
		Pole-changing	1LE1011			**1LE1011** ⑪					
			1LE1012			**1LE1012** ⑫					
1LE10 . . - . . . . . - . . . . -Z **1PC10 . . - . . . . . - . . . . -Z**	Order code	Motor version	Motor type	Frame size 80	90	100	112	132	160	180	200
Windings and insulation (continued)											
Temperature class 155 (F), utilized acc. to 130 (B), coolant temperature 60 °C, derating approx. 18 %	**N08**	All	All	✓	✓	✓	✓	✓	✓	✓	✓
Temperature class H [31]	**N10**	All except ③, ⑤, ⑥, ⑨ and ⑩		✓	✓	–	–	–	–	–	–
Temperature class 180 (H) at rated output and max. CT 60 °C [6] [31]	**N11**	All except ⑥		✓	✓	✓	✓	✓	✓	✓	✓
Increased air humidity/temperature with 30 to 60 g water per m^3 of air	**N20**	All	All	✓	✓	✓	✓	✓	✓	✓	✓
Increased air humidity/temperature with 60 to 100 g water per m^3 of air	**N21**	All	All	✓	✓	✓	✓	✓	✓	✓	✓
Temperature class 155 (F), utilized acc. to 130 (B), with higher coolant temperature and/or installation altitude	**Y50** • and specified output, CT .. °C or IA …. m above sea level	All	All	✓	✓	✓	✓	✓	✓	✓	✓
Temperature class 155 (F), utilized according to 155 (F), other requirements	**Y52** • and customer specifications	All	All	✓	✓	✓	✓	✓	✓	✓	✓
Temperature class 180 (H), utilized according to 155 (F), other requirements	**Y75** • *New!* and specified output, CT .. °C or IA …. m above sea level	All except ⑥		–	–	O. R.	O. R.	O. R.	O. R.	–	–
Colors and paint finish											
Standard finish in RAL 7030 stone gray		All	All	◘	◘	◘	◘	◘	◘	◘	◘
Unpainted (only cast-iron parts primed)	**S00**	All	All	○	○	○	○	○	○	○	○
Unpainted, only primed	**S01**	All	All	✓	✓	✓	✓	✓	✓	✓	✓
Special finish	**S02** *New!*	All	All	✓	✓	✓	✓	✓	✓	✓	✓
Special finish sea air resistant	**S03**	All	All	–	–	✓	✓	✓	✓	✓	✓
Top coat polyurethane [34]	**S06** *New!*	All	All	✓	✓	✓	✓	✓	✓	✓	✓
Finish in other standard RAL colors: RAL 1002, 1013, 1015, 1019, 2003, 2004, 3000, 3007, 5007, 5009, 5010, 5012, 5015, 5017, 5018, 5019, 6011, 6019, 6021, 7000, 7001, 7004, 7011, 7016, 7022, 7031, 7032, 7033, 7035, 9001, 9002, 9005 (see Catalog Section 1 "Introduction")	**Y53** • *New!* and finish RAL ….	All	All	–	–	–	–	–	–	✓	✓
Finish in special RAL colors: For RAL colors, see "Special finish in special RAL colors" (see Catalog Section 1 "Introduction")	**Y56** • *New!* and finish RAL ….	All	All	✓	✓	✓	✓	✓	✓	✓	✓

For legends and footnotes, see Page 2/79.

© Siemens AG 2015

Options · Aluminum series 1LE10, 1PC10

Special versions	Additional identification code **-Z** with order code and plain text if required	Motor category									
		Motor version	**Motor type (alum.)**	**Motor type – frame size**							
				80	**90**	**100**	**112**	**132**	**160**	**180**	**200**
		IE2 High Efficiency	1LE1001	**1LE1001** ①							
			1PC1001			**1PC1001** ②					
			1LE1041	**1LE1041 APAC Line** ③							
		IE3 Premium Efficiency	1LE1003	**1LE1003** ④							
			1LE1043	**1LE1043 APAC Line** ⑤							
		IE4 Super Premium Efficiency	1LE1004			**1LE1004** ⑥					
		IE1 Standard Efficiency	1LE1002			**1LE1002** ⑦					
			1PC1002			**1PC1002** ⑧					
		NEMA Energy Efficient	1LE1021	**1LE1021 Eagle Line** ⑨							
		NEMA Premium Efficient	1LE1023	**1LE1023 Eagle Line** ⑩							
		Pole-changing	1LE1011			**1LE1011** ⑪					
			1LE1012			**1LE1012** ⑫					
1LE10 . . - . . . . . - . . . . -Z **1PC10 . . - . . . . . - . . . . -Z**	Order code	Motor version	Motor type	Frame size							
				80	90	100	112	132	160	180	200
Modular technology – Basic versions [7]											
Mounting of holding brake (standard assignment) [8] [28]	**F01**	All except ②, ⑧ and in combination with order code F90		✓	✓	✓	✓	✓	✓	✓	✓
Mounting of brake for higher switching frequency (operating brake)	**F02**	All	All	O. R.	O. R.	O. R.	O. R.	O. R.	O. R.	–	–
Mounting of separately driven fan [29]	**F70**	All except ②, ⑧ and in combination with order code F90		✓	✓	✓	✓	✓	✓	✓	✓
Mounting of 1XP8012-10 (HTL) rotary pulse encoder [9] [10]	**G01**	All except ②, ⑧ and in combination with order code F90		✓	✓	✓	✓	✓	✓	✓	✓
Mounting of 1XP8012-20 (TTL) rotary pulse encoder [9] [10]	**G02**	All except ②, ⑧ and in combination with order code F90		✓	✓	✓	✓	✓	✓	✓	✓
Modular technology – Additional versions											
Brake supply voltage 24 V DC	**F10**	All except ②, ⑧ and in combination with order code F90		✓	✓	✓	✓	✓	✓	✓	✓
Brake supply voltage 230 V AC, 50/60 Hz	**F11**	All except ②, ⑧ and in combination with order code F90		✓	✓	○	○	○	○	○	○
Brake supply voltage 400 V AC, 50/60 Hz	**F12**	All except ②, ⑧ and in combination with order code F90		✓	✓	✓	✓	✓	✓	✓	✓
Mechanical manual brake release with lever (no locking)	**F50**	All except ②, ⑧ and in combination with order code F90		✓	✓	✓	✓	✓	✓	✓	✓
Special technology [6]											
Mounting of LL 861 900 220 rotary pulse encoder [9]	**G04**	All except ②, ⑧ and in combination with order code F90		–	–	✓	✓	✓	✓	✓	✓
Mounting of HOG 9 D 1024 I rotary pulse encoder [9]	**G05**	All except ②, ⑧ and in combination with order code F90		–	–	✓	✓	✓	✓	✓	✓
Mounting of HOG 10 D 1024 I rotary pulse encoder [9]	**G06**	All except ②, ⑧ and in combination with order code F90		–	–	✓	✓	✓	✓	✓	✓
Mechanical design and degrees of protection											
Low-noise version for 2-pole motors with clockwise direction of rotation	**F77**	All except ②, ⑧ and in combination with order code F90		–	–	–	–	✓	✓	✓	✓
Low-noise version for 2-pole motors with counter-clockwise direction of rotation	**F78**	All except ②, ⑧ and in combination with order code F90		–	–	–	–	✓	✓	✓	✓
Prepared for mountings, center hole only [10]	**G40**	All except ②, ⑧ and in combination with order code F90		✓	✓	✓	✓	✓	✓	◘	◘
Prepared for mountings with D12 shaft [15]	**G41**	All except ②, ⑧ and in combination with order code F90		✓	✓	✓	✓	✓	✓	✓	✓
Prepared for mountings with D16 shaft [15]	**G42**	All except ②, ⑧ and in combination with order code F90		O. R.	O. R.	✓	✓	✓	✓	✓	✓
Protective cover for encoder (pre-assembled or supplied loose depending on frame size)	**G43**	All except ②, ⑧ and in combination with order code F90		✓	✓	✓	✓	✓	✓	✓	✓
Protective cover [9] [11]	**H00**	All except ②, ⑧ and in combination with order code F90		✓	✓	✓	✓	✓	✓	✓	✓
Screwed-on (instead of cast) feet	**H01**	All	All	✓	✓	✓	✓	✓	✓	◘	◘
Vibration-proof version; vibration resistance to Class 3M4 according to IEC 60721-3-3	**H02**	All	All	–	–	✓	✓	✓	✓	✓	✓
Condensation drainage holes [14]	**H03**	All	All	✓	✓	✓	✓	✓	✓	✓	✓
Rust-resistant screws (externally)	**H07**	All	All	✓	✓	✓	✓	✓	✓	✓	✓
Housing with screw mounting [32]	**H10**	Only possible for ① and ③ (frame sizes 80 and 90), ④, ⑤, ⑨ and ⑩		✓	✓	–	–	–	–	✓	✓
IP65 degree of protection [13]	**H20**	All	All	✓	✓	✓	✓	✓	✓	✓	✓
IP56 degree of protection [12]	**H22**	All	All	✓	✓	✓	✓	✓	✓	✓	✓
Drive-end seal for flange-mounting motors, oil-tight to 0.1 bar [16]	**H23**	All	All	✓	✓	✓	✓	✓	✓	✓	✓

For legends and footnotes, see Page 2/79.

© Siemens AG 2015

Special versions	Additional identification code **-Z** with order code and plain text if required	Motor category								
		Motor version	**Motor type (alum.)**	**Motor type – frame size** 80	90	100	112	132	160	180	200
		IE2 High Efficiency	1LE1001	**1LE1001** ①							
			1PC1001			**1PC1001** ②					
			1LE1041	**1LE1041 APAC Line** ③							
		IE3 Premium Efficiency	1LE1003	**1LE1003** ④							
			1LE1043	**1LE1043 APAC Line** ⑤							
		IE4 Super Premium Efficiency	1LE1004			**1LE1004** ⑥					
		IE1 Standard Efficiency	1LE1002			**1LE1002** ⑦					
			1PC1002			**1PC1002** ⑧					
		NEMA Energy Efficient	1LE1021	**1LE1021 Eagle Line** ⑨							
		NEMA Premium Efficient	1LE1023	**1LE1023 Eagle Line** ⑩							
		Pole-changing	1LE1011			**1LE1011** ⑪					
			1LE1012			**1LE1012** ⑫					
1LE10 . . - . . . . . - . . . . -Z **1PC10 . . - . . . . . - . . . . -Z**	Order code	Motor version	Motor type	Frame size 80	90	100	112	132	160	180	200
Coolant temperature and installation altitude											
Coolant temperature –40 to +40 °C [16) 28)]	**D03**	All	All	✓	✓	✓	✓	✓	✓	✓	✓
Coolant temperature –30 to +40 °C [16) 28)]	**D04**	All	All	✓	✓	✓	✓	✓	✓	✓	✓
Designs in accordance with standards and specifications											
VIK version	**C02**	Only possible for ① and ④		✓	✓	✓	✓	✓	✓	–	–
Motor without CE marking for export outside EEA (see EU Directive 640/2009)	**D22**	Only possible for ①, ②, ⑦ and ⑧		–	–	○	○	○	○	○	○
Electrical according to NEMA MG1-12 [18)]	**D30**	All, standard version for ⑤, ⑨ and ⑩		✓	✓	✓	✓	✓	✓	✓	✓
Version according to UL with "Recognition Mark" [19)]	**D31**	All, standard version for ⑤, ⑨ and ⑩		✓	✓	✓	✓	✓	✓	✓	✓
KEMCO Korea Energy Efficiency Label	**D33**	Only possible for ⑤		○	○	○	○	○	○	○	○
China Energy Efficiency Label	**D34**	Only possible for ①, ④, ⑤, ⑥, ⑨ and ⑩		–	–	○	○	○	○	○	○
Canadian regulations (CSA) [37) 33)]	**D40**	All, standard version for ⑤, ⑨ and ⑩; not possible for ⑪ and ⑫		✓	✓	✓	✓	✓	✓	Av. soon	Av. soon
TR CU product safety certificate EAC for Eurasian customs union [35)]	**D47** *New!*	All	All	✓	✓	✓	✓	✓	✓	–	–
Train-compatible version [31)]	**L82**	All except ②, ⑥ and ⑧		✓	✓	✓	✓	✓	✓	Av. soon	Av. soon
Bearings and lubrication											
Regreasing device with M10 × 1 grease nipple according to DIN 71412-A	**L19** *New!*	All	All	–	–	–	–	–	–	✓	✓
Located bearing DE	**L20**	All	All	✓	✓	✓	✓	✓	✓	✓	✓
Located bearing NDE	**L21**	All	All	✓	✓	✓	✓	✓	◘	◘	◘
Bearing design for increased cantilever forces [36)]	**L22**	All	All	–	–	✓	✓	✓	✓	✓	✓
Regreasing device [20)]	**L23**	All	All	–	–	✓	✓	✓	✓	✓	✓
Deep-groove bearings reinforced at both ends for DE and NDE, bearing size 63	**L25**	All	All	–	–	✓	✓	✓	✓	✓	✓
Measuring nipple for SPM shock pulse measurement for bearing inspection [20)]	**Q01**	All	All	–	–	✓	✓	✓	✓	✓	✓
Balance and vibration quantity											
Vibration quantity level A		All	All	◘	◘	◘	◘	◘	◘	◘	◘
Vibration quantity level B	**L00**	All	All	✓	✓	✓	✓	✓	✓	✓	✓
Half-key balancing (standard)		All	All	◘	◘	◘	◘	◘	◘	◘	◘
Balancing without key	**L01**	All	All	✓	✓	✓	✓	✓	✓	✓	✓
Full-key balancing	**L02**	All	All	✓	✓	✓	✓	✓	✓	✓	✓
Shaft and rotor											
Shaft extension with standard dimensions, without feather keyway	**L04**	All	All	–	–	✓	✓	✓	✓	✓	✓
Standard cylindrical shaft extension	**L05**	All except ②, ⑧ and in combination with order code F90		✓	✓	✓	✓	✓	✓	✓	✓
Standard shaft made of stainless steel (e.g. 1.4021)	**L06**	All	All	✓	✓	✓	✓	✓	✓	✓	✓
Concentricity of shaft extension in accordance with DIN 42955 Tolerance R	**L07**	All	All	✓	✓	✓	✓	✓	✓	✓	✓
Concentricity of shaft extension, coaxiality and linear movement in accordance with DIN 42955 tolerance R for flange-mounting motors	**L08**	All	All	✓	✓	✓	✓	✓	✓	✓	✓
Non-standard shaft extension, DE [21)]	**Y58** • and customer specifications	All	All	✓	✓	✓	✓	✓	✓	✓	✓
Non-standard shaft extension, NDE [21)]	**Y59** • and customer specifications	All	All	✓	✓	✓	✓	✓	✓	✓	✓

For legends and footnotes, see Page 2/79.

© Siemens AG 2015

Options · Aluminum series 1LE10, 1PC10

Special versions	Additional identification code **-Z** with order code and plain text if required	Motor category								
		Motor version	**Motor type (alum.)**	**Motor type – frame size** 80	90	100	112	132	160	180	200
		IE2 High Efficiency	1LE1001	**1LE1001** ①							
			1PC1001			**1PC1001** ②					
			1LE1041	**1LE1041 APAC Line** ③							
		IE3 Premium Efficiency	1LE1003	**1LE1003** ④							
			1LE1043	**1LE1043 APAC Line** ⑤							
		IE4 Super Premium Efficiency	1LE1004			**1LE1004** ⑥					
		IE1 Standard Efficiency	1LE1002			**1LE1002** ⑦					
			1PC1002			**1PC1002** ⑧					
		NEMA Energy Efficient	1LE1021	**1LE1021 Eagle Line** ⑨							
		NEMA Premium Efficient	1LE1023	**1LE1023 Eagle Line** ⑩							
		Pole-changing	1LE1011			**1LE1011** ⑪					
			1LE1012			**1LE1012** ⑫					
1LE10 . . - . . . . . - . . . . -Z **1PC10 . . - . . . . . - . . . . -Z**	Order code	Motor version	Motor type	Frame size 80	90	100	112	132	160	180	200
Heating and ventilation											
Sheet metal fan cover	**F74**	All except ②, ⑧ and in combination with order code F90		✓	✓	✓	✓	✓	✓	✓	✓
Fan cover for textile industry [22]	**F75**	All except ②, ⑧ and in combination with order code F90		✓	✓	✓	✓	✓	✓	✓	✓
Metal external fan [23] [29]	**F76**	All except ②, ⑧ and in combination with order code F90		✓	✓	✓	✓	✓	✓	✓	✓
Without external fan and without fan cover	**F90**	All except ②, ⑧, ⑪ and ⑫		✓	✓	✓	✓	✓	✓	✓	✓
Anti-condensation heating for 230 V	**Q02**	All	All	✓	✓	✓	✓	✓	✓	✓	✓
Anti-condensation heating for 115 V	**Q03**	All	All	✓	✓	✓	✓	✓	✓	✓	✓
Rating plate and extra rating plates											
Extra rating plate for voltage tolerance [24]	**B07**	All except ②, ⑧, ⑪, ⑫ and 8-pole motors		✓	✓	✓	✓	✓	✓	✓	✓
Second rating plate, loose [25]	**M10**	All	All	✓	✓	✓	✓	✓	✓	✓	✓
Rating plate, stainless steel	**M11**	All	All	✓	✓	✓	✓	✓	✓	✓	✓
Extra rating plate or rating plate with deviating rating plate data	**Y80** • and customer specifications	All	All	✓	✓	✓	✓	✓	✓	✓	✓
Extra rating plate with customer specifications	**Y82** • and customer specifications	All	All	✓	✓	✓	✓	✓	✓	✓	✓
Additional information on rating plate and on package label (max. 20 characters)	**Y84** • and customer specifications	All	All	✓	✓	✓	✓	✓	✓	✓	✓
Adhesive label, supplied loose (printed with: Article No., Serial No.: 2 lines of text)	**Y85** • and customer specifications	All	All	–	–	✓	✓	✓	✓	✓	✓
Packaging, safety notes, documentation and test certificates											
Printed German/English Operating Instructions (Compact) enclosed [27]		All	All	◘	◘	◘	◘	◘	◘	◘	◘
Printed German/English Operating Instructions (Compact) enclosed in each wire-lattice pallet [27]	**B01**	All	All	○	○	○	○	○	○	○	○
Acceptance test certificate 3.1 according to EN 10204 [26]	**B02**	All	All	✓	✓	✓	✓	✓	✓	✓	✓
Printed German/English Operating Instructions enclosed	**B04**	All	All	✓	✓	✓	✓	✓	✓	✓	✓
Document - Electrical data sheet	**B60**	All	All	✓	✓	✓	✓	✓	✓	✓	✓
Document - Order dimensional drawing	**B61**	All	All	✓	✓	✓	✓	✓	✓	✓	✓
Type test with heat run for horizontal motors, with acceptance	**B83**	All	All	✓	✓	✓	✓	✓	✓	✓	✓
Wire-lattice pallet packaging	**B99**	All	All	○	○	○	○	○	○	○	○
Connected in star for dispatch	**M01**	All	All	–	–	✓	✓	✓	✓	✓	✓
Connected in delta for dispatch	**M02**	All	All	–	–	✓	✓	✓	✓	✓	✓

For legends and footnotes, see Page 2/79.

© Siemens AG 2015

◘	Standard version
○	Without additional charge
•	This order code only determines the price of the version – Additional plain text is required
✓	With additional charge
O. R.	Possible on request
Av. soon	Available soon
–	Not possible

1) With IM B5 flange, only possible in combination with **H08**.

2) Not possible in combination with order code **R15** "One metal cable gland".

3) With **H08**, feet dimensions C and CA differ from EN 50347! Further information is available in DT Configurator (see Appendix, "Tools and Configuring").

4) In combination with motor protection (15th position of the Article No.) or anti-condensation heating option, please inquire before ordering.

5) Not possible in combination with voltage code **22** or **34**.

6) Cannot be used for motors in UL version (order code **D31**). The grease lifetime specified in Catalog Section 1 "Introduction" refers to CT 40 °C. When the coolant temperature rises by 10 K, the grease service lifetime or relubrication interval is halved.

7) A second shaft extension is not possible. Please inquire for mounted brakes.

8) For order codes **F10**, **F11** and **F12**, the brake supply voltage must be specified or ordered.

9) All encoders are supplied with a protective cover as standard. The protective cover is omitted at the factory when a rotary pulse encoder is combined with a separately driven fan, because in this case the rotary pulse encoder is installed under the fan cover. In combination with a separately driven fan (order code **F70**) the 1XP8032-10 rotary pulse encoder is used instead of 1XP8012-10 or 1XP8032-20 is used instead of 1XP8012-20.

10) Motors that are prepared for additional mountings (order codes **G40**, **G41**, **G42**) are supplied without a protective cover as standard. If a protective cover is requested as a cover or mechanical protection for mountings provided by the customer, this can be ordered with order code **G43**. Not possible in combination with order code **L00** vibration quantity level B. In combination with a separately driven fan (order code **F70**) the 1XP8032-10 rotary pulse encoder is used instead of 1XP8012-10 or 1XP8032-20 is used instead of 1XP8012-20.

11) Order code **H00** provides mechanical protection for encoders.

12) Not possible in combination with brake 2LM8 – order code **F01**.

13) Not possible in combination with HOG 9 D 1024I rotary pulse encoder (order code **G05**) and/or brake 2LM8 (order code **F01**).

14) Supplied with the condensation drainage holes sealed at the drive end DE and non-drive end NDE (IP55, IP56, IP65). If the condensation drainage holes are required for motors of the IM B6, IM B7 or IM B8 type of construction (feet on side or top), the motors must be ordered in the respective type of construction and with order code **H03**, so that the condensation drainage holes will be placed in the correct position.

15) Motors that are prepared for additional mountings (order codes **G40**, **G41**, **G42**) are supplied without a protective cover as standard. If a protective cover is requested as a cover or mechanical protection for mountings provided by the customer, this can be ordered with order code **G43**. Not possible in combination with order code **L00** vibration quantity level B.

16) In connection with mountings, the respective technical specifications must be observed, please inquire before ordering.

17) CCC certification is required for
– 2-pole motors ≤ 2.2 kW
– 4-pole motors ≤ 1.1 kW
– 6-pole motors ≤ 0.75 kW
– 8-pole motors ≤ 0.55 kW

18) Possible up to 600 V max. The rated voltage is indicated on the rating plate without voltage range. Order codes **D30** and **D31** do not authorize importing into USA and Mexico. The North America export versions Eagle Line 1LE1021 NEMA Energy Efficient and 1LE1023 NEMA Premium Efficient are available for this purpose.

19) In connection with mountings, the respective technical specifications must be observed, please inquire before ordering.

20) Not possible when brake is mounted.

21) When motors are ordered that have a longer or shorter shaft extension than normal, the required position and length of the feather keyway must be specified in a sketch. It must be ensured that only feather keys in accordance with DIN 6885, Form A are permitted to be used. The feather keyway is positioned centrally on the shaft extension. The length is defined by the manufacturer in accordance with the appropriate standard. Not valid for: Conical shafts, non-standard threaded journals, non-standard shaft tolerances, friction welded journals, extremely "thin" shafts, special geometry dimensions (e.g. square journals), hollow shafts. Valid for non-standard shaft extensions DE or NDE. The feather keys are supplied in every case. For order codes **Y58**, **Y59** and **L05**:
– Dimensions D and DA ≤ Inner diameter of roller bearing (see tables under "Dimensions")
– Dimensions E and EA ≤2 × length E (normal) of the shaft extension.

22) The special requirements of the textile industry regarding the sheet metal cover open up the possibility that a finger may be inserted between the cover and enclosure. The customer must implement appropriate measures to ensure that the installed system is "finger-safe".

23) Converter operation is permitted for 1LE1 motors with metal external fans. The metal external fan is not possible in combination with the low-noise version – order code **F77** or **F78**.

24) Can be ordered for 230 VΔ/400 VY or 400 VΔ/690 VY (voltage code "**22**" or "**34**"). Not possible in combination with order code **D34**.

25) As adhesive label for frame sizes 80 and 90.

26) The delivery time for the factory test certificate may differ from the delivery time for the motor and it will be dispatched by email.

27) The Operating Instructions (compact) are available in PDF format for all official EU languages at http://support.automation.siemens.com/WW/view/en/40761976.

28) Not possible in combination with order code **N05**, **N06**, **N07**, **N08** and **N11**.

29) Order codes **F70** and **F76** cannot be combined.

30) When ordering with order code **R70** and **R71**, order code **R50** is included.

31) Not possible for 2-pole and 4-pole motors with increased output (11th position of Article No.: 6) in frame sizes 80 and 90.

32) Possible with frame sizes 180 and 200 with screw-mounted fan cover.

33) Frame sizes 180 and 200 are designed with metric entry thread.

34) Order code **S06** cannot be combined with order code **S00** and **S01**. It can be combined with **Y53** and **Y56** on request.

35) Please note the additional use of order code **D22** "Motor without CE marking for export outside EEA (see EU Directive 640/2009)".

36) A minimum cantilever force F_{min} of 0.5 · F_{max} is required for NU bearings (cylindrical roller bearings) in contrast to bearings. Cylindrical roller bearings are not suitable for coupling output or for brief periods of no-load operation without cantilever force.

37) The rated voltage is indicated on the rating plate without voltage range. Order code **D40** does not authorize importing into Canada. The North America export versions Eagle Line 1LE1021 NEMA Energy Efficient and 1LE1023 NEMA Premium Efficient are available for this purpose.

© Siemens AG 2015

2

Selection and ordering data

Special versions	Additional identification code **-Z** with order code and plain text if required	Motor category														
		Motor version	**Motor type (cast-iron)**	**Motor type – frame size**												
				71	**80**	**90**	**100**	**112**	**132**	**160**	**180**	**200**	**225**	**250**	**280**	**315**
		IE2 High Efficiency	1LE1501	**1LE1501 Basic Line** ①												
			1LE1601				**1LE1601 Performance Line** ②									
			1LE1541								**1LE1541 APAC Line** ③					
		IE3 Premium Efficiency	1LE1503	**1LE1503 Basic Line** ④												
			1LE1603				**1LE1603 Performance Line** ⑤									
			1LE1543									**1LE1543 Basic Line** ⑥				
			1LE1643									**1LE1643 Performance Line** ⑦				
		IE4 Super Premium Efficiency	1LE1504				**1LE1504 Basic Line** ⑧									
			1LE1604				**1LE1604 Performance Line** ⑨									
		NEMA Energy Efficient	1LE1521	**1LE1521 Eagle Line Basic** ⑩												
			1LE1621				**1LE1621 Eagle Line Performance** ⑪									
		NEMA Premium Efficient	1LE1523	**1LE1523 Eagle Line Basic** ⑫												
			1LE1623				**1LE1623 Eagle Line Performance** ⑬									
		Motor version	Motor type	Frame size												
1LE1. . . - . . . . . - . . . . -Z	Order code			71	80	90	100	112	132	160	180	200	225	250	280	315
Motor protection (bearing protection)																
Prepared for mounting a SIPLUS CMS 1000 vibration sensor	**Q05**	All	All	–	–	–	✓	✓	✓	✓	✓	✓	✓	✓	✓	✓
Motor protection with PTC thermistor with 3 embedded temperature sensors for tripping	**Q11** *New!*	All	All	–	–	–	✓	✓	✓	✓	✓	✓	✓	✓	✓	✓
Motor protection with PTC thermistor with 6 embedded temperature sensors for tripping and alarm	**Q12** *New!*	All	All	–	–	–	✓	✓	✓	✓	✓	✓	✓	✓	✓	✓
Motor temperature detection with embedded temperature sensor KTY 84-130	**Q23** *New!*	All	All	–	–	–	✓	✓	✓	✓	✓	✓	✓	✓	✓	✓
Motor temperature detection with 2 × embedded temperature sensors KTY 84-130	**Q25** *New!*	All	All	–	–	–	✓	✓	✓	✓	✓	✓	✓	✓	✓	✓
Temperature detectors for tripping	**Q31** *New!*	All	All	–	–	–	✓	✓	✓	✓	✓	✓	✓	✓	✓	✓
2 × 3 temperature detectors for alarm and tripping	**Q32**	All	All	–	–	–	✓	✓	✓	✓	✓	✓	✓	✓	✓	✓
Installation of 3 Pt100 resistance thermometers in stator winding (2-wire circuit)	**Q60** *New!*	All	All	–	–	–	✓	✓	✓	✓	✓	✓	✓	✓	✓	✓
Installation of 6 Pt100 resistance thermometers in stator winding (2-wire circuit) [27]	**Q61** *New!*	All	All	–	–	–	✓	✓	✓	✓	✓	✓	✓	✓	✓	✓
Installation of 1 Pt100 resistance thermometer in stator winding, 2-wire circuit	**Q62**	All	All	–	–	–	✓	✓	✓	✓	✓	✓	✓	✓	✓	✓
Installation of 3 Pt100 resistance thermometers in stator winding, three-wire circuit [30]	**Q63**	All	All	–	–	–	✓	✓	✓	✓	✓	✓	✓	✓	✓	✓
Installation of 6 Pt100 resistance thermometers in stator winding, three-wire circuit [30]	**Q64**	All	All	–	–	–	✓	✓	✓	✓	✓	✓	✓	✓	✓	✓
Installation of 2 Pt100 screw-in resistance thermometers in basic circuit for monitoring bearing temperature with rolling-contact bearings [2]	**Q72**	All	All	–	–	–	–	–	–	–	✓	✓	✓	✓	✓	✓
Installation of 2 Pt100 screw-in resistance thermometers in 3-wire circuit for monitoring bearing temperature with rolling-contact bearings	**Q78**	All	All	–	–	–	–	–	–	–	✓	✓	✓	✓	✓	✓
Installation of 2 Pt100 double screw-in resistance thermometers in 3-wire circuit for monitoring bearing temperature with rolling-contact bearings	**Q79**	All	All	–	–	–	–	–	–	–	✓	✓	✓	✓	✓	✓
Motor connection and terminal box																
External grounding	**H04**	All	All	✓	✓	✓	✓	✓	✓	✓	□	□	□	□	□	□
Terminal box on NDE [27]	**H08**	All	All	✓	✓	✓	✓	✓	✓	✓	✓	✓	✓	✓	✓	✓
Second external grounding	**H70**	All	All	–	–	–	✓	✓	✓	✓	✓	✓	✓	✓	✓	✓
Rotation of the terminal box through 90°, entry from DE	**R10**	All	All	○	○	○	○	○	○	○	✓	✓	✓	✓	✓	✓
Rotation of the terminal box through 90°, entry from NDE	**R11**	All	All	○	○	○	○	○	○	○	✓	✓	✓	✓	✓	✓

For legends and footnotes, see Page 2/87.

© Siemens AG 2015

Special versions	Additional identification code **-Z** with order code and plain text if required	Motor category													
		Motor version	**Motor type (cast-iron)**	**Motor type – frame size**											
				71	**80**	**90**	**100**	**112**	**132**	**160**	**180**	**200**	**225**	**250**	**280**	**315**
		IE2 High Efficiency	1LE1501	**1LE1501 Basic Line** ①												
			1LE1601				**1LE1601 Performance Line** ②									
			1LE1541								**1LE1541 APAC Line** ③					
		IE3 Premium Efficiency	1LE1503	**1LE1503 Basic Line** ④												
			1LE1603				**1LE1603 Performance Line** ⑤									
			1LE1543									**1LE1543 Basic Line** ⑥				
			1LE1643									**1LE1643 Performance Line** ⑦				
		IE4 Super Premium Efficiency	1LE1504				**1LE1504 Basic Line** ⑧									
			1LE1604				**1LE1604 Performance Line** ⑨									
		NEMA Energy Efficient	1LE1521	**1LE1521 Eagle Line Basic** ⑩												
			1LE1621				**1LE1621 Eagle Line Performance** ⑪									
		NEMA Premium Efficient	1LE1523	**1LE1523 Eagle Line Basic** ⑫												
			1LE1623				**1LE1623 Eagle Line Performance** ⑬									
1LE1. . . - . . . . . - . . . . -Z	Order code	Motor version	Motor type	Frame size												
				71	80	90	100	112	132	160	180	200	225	250	280	315
Motor connection and terminal box (continued)																
Rotation of the terminal box through 180°	**R12**	All	All	○	○	○	○	○	○	○	✓	✓	✓	✓	✓	✓
One EMC cable gland	**R14**	All	All	✓	✓	✓	✓	✓	✓	✓	✓	✓	✓	✓	✓	✓
One metal cable gland	**R15**	All	All	✓	✓	✓	✓	✓	✓	✓	✓	✓	✓	✓	✓	✓
EMC cable gland, maximum configuration	**R16**	All	All	✓	✓	✓	✓	✓	✓	✓	✓	✓	✓	✓	✓	✓
Stud terminal for cable connection, accessories pack (3 items)	**R17**	All	All	–	–	–	–	–	–	–	–	–	–	✓	✓	✓
Cable gland, maximum configuration	**R18**	All	All	✓	✓	✓	✓	✓	✓	✓	✓	✓	✓	✓	✓	✓
Saddle terminal for connection without cable lug, accessories pack	**R19**	All	All	–	–	–	–	–	–	–	–	–	–	✓	✓	✓
3 cables protruding, 0.5 m long	**R20**	All	All	✓	✓	✓	✓	✓	✓	✓	✓	–	–	–	–	–
3 cables protruding, 1.5 m long	**R21**	All	All	✓	✓	✓	✓	✓	✓	✓	O. R.	O. R.	O. R.	O. R.	O. R.	O. R.
6 cables protruding, 0.5 m long	**R22**	All	All	✓	✓	✓	✓	✓	✓	✓	✓	–	–	–	–	–
6 cables protruding, 1.5 m long	**R23**	All	All	✓	✓	✓	✓	✓	✓	✓	O. R.	O. R.	O. R.	O. R.	O. R.	O. R.
6 cables protruding, 3 m long	**R24**	All	All	✓	✓	✓	✓	✓	✓	✓	O. R.	O. R.	O. R.	O. R.	O. R.	O. R.
Reduction piece for M cable gland in accordance with British Standard, mounted on both cable entry openings	**R30**	All	All	–	–	–	✓	✓	✓	✓	–	–	–	–	–	–
Larger terminal box	**R50**	All	All	✓	✓	✓	✓	✓	✓	✓	✓	✓	✓	✓	✓	✓
Terminal box without cable entry opening	**R51**	All	All	–	–	–	○	○	○	○	○	○	○	○	○	○
Drilled removable entry plate	**R52**	All	All	–	–	–	–	–	–	–	✓	✓	✓	✓	✓	✓
Undrilled removable entry plate	**R53**	All	All	–	–	–	–	–	–	–	✓	✓	✓	✓	✓	✓
Cast-iron auxiliary terminal box (small) 27)	**R62**	All	All	–	–	–	✓	✓	✓	✓	✓	✓	✓	✓	✓	✓
Silicon-free version	**R74**	All	All	–	–	–	◘	◘	◘	◘	◘	◘	◘	✓	✓	✓
Non-standard threaded through hole (NPT or G thread)	**Y61** • and customer specifications	All	All	–	–	–	✓	✓	✓	✓	✓	✓	✓	✓	✓	✓
Windings and insulation																
Temperature class 155 (F), utilized acc. to 155 (F), with service factor	**N01**	All	All	✓	✓	✓	✓	✓	✓	✓	✓	✓	✓	✓	✓	✓
Temperature class 155 (F), utilized acc. to 155 (F), with increased output	**N02**	All	All	✓	✓	✓	✓	✓	✓	✓	✓	✓	✓	✓	✓	✓
Temperature class 155 (F), utilized acc. to 155 (F), with increased coolant temperature	**N03**	All	All	✓	✓	✓	✓	✓	✓	✓	✓	✓	✓	✓	✓	✓
Temperature class 155 (F), utilized acc. to 130 (B), coolant temperature 45 °C, derating approx. 4 %	**N05**	All	All	✓	✓	✓	✓	✓	✓	✓	✓	✓	✓	✓	✓	✓
Temperature class 155 (F), utilized acc. to 130 (B), coolant temperature 50 °C, derating approx. 8 %	**N06**	All	All	✓	✓	✓	✓	✓	✓	✓	✓	✓	✓	✓	✓	✓
Temperature class 155 (F), utilized acc. to 130 (B), coolant temperature 55 °C, derating approx. 13 %	**N07**	All	All	✓	✓	✓	✓	✓	✓	✓	✓	✓	✓	✓	✓	✓

For legends and footnotes, see Page 2/87.

© Siemens AG 2015

Options · Cast-iron series 1LE15 Basic Line, 1LE16 Performance Line

2

Special versions	Additional identification code **-Z** with order code and plain text if required	Motor category **Motor version**	**Motor type (cast-iron)**	**Motor type – frame size** **71 80 90 100 112 132 160 180 200 225 250 280 315**
		IE2 High Efficiency	1LE1501	**1LE1501 Basic Line** ①
			1LE1601	**1LE1601 Performance Line** ②
			1LE1541	**1LE1541 APAC Line** ③
		IE3 Premium Efficiency	1LE1503	**1LE1503 Basic Line** ④
			1LE1603	**1LE1603 Performance Line** ⑤
			1LE1543	**1LE1543 Basic Line** ⑥
			1LE1643	**1LE1643 Performance Line** ⑦
		IE4 Super Premium Efficiency	1LE1504	**1LE1504 Basic Line** ⑧
			1LE1604	**1LE1604 Performance Line** ⑨
		NEMA Energy Efficient	1LE1521	**1LE1521 Eagle Line Basic** ⑩
			1LE1621	**1LE1621 Eagle Line Performance** ⑪
		NEMA Premium Efficient	1LE1523	**1LE1523 Eagle Line Basic** ⑫
			1LE1623	**1LE1623 Eagle Line Performance** ⑬

1LE1. . . - . . . . . - . . . . -Z	Order code	Motor version	Motor type	Frame size 71 80 90 100 112 132 160 180 200 225 250 280 315
Windings and insulation (continued)				
Temperature class 155 (F), utilized acc. to 130 (B), coolant temperature 60 °C, derating approx. 18 %	**N08**	All	All	✓ ✓ ✓ ✓ ✓ ✓ ✓ ✓ ✓ ✓ ✓ ✓ ✓
Temperature class 180 (H)	**N10**	All except ③, ⑥, ⑦, ⑧, ⑨, ⑩, ⑪, ⑫ and ⑬		✓ ✓ ✓ ✓ ✓ ✓ ✓ ✓ ✓ ✓ ✓ ✓ ✓
Temperature class 180 (H) at rated output and max. CT 60 °C [4) 5)]	**N11**	All except ⑧ and ⑨		✓ ✓ ✓ ✓ ✓ ✓ ✓ ✓ ✓ ✓ ✓ ✓ ✓
Increased air humidity/temperature with 30 to 60 g water per m^3 of air	**N20**	All	All	✓ ✓ ✓ ✓ ✓ ✓ ✓ ✓ ✓ ✓ ✓ ✓ ✓
Increased air humidity/temperature with 60 to 100 g water per m^3 of air	**N21**	All	All	– – – ✓ ✓ ✓ ✓ ✓ ✓ ✓ ✓ ✓ ✓
Temperature class 155 (F), utilized acc. to 130 (B), with higher coolant temperature and/or installation altitude	**Y50 •** and specified output, CT .. °C or IA …. m above sea level	All	All	– – – ✓ ✓ ✓ ✓ ✓ ✓ ✓ ✓ ✓ ✓
Temperature class 155 (F), utilized acc. to 155 (F), other requirements [5)]	**Y52 •** and customer specifications	All	All	✓ ✓ ✓ ✓ ✓ ✓ ✓ ✓ ✓ ✓ ✓ ✓ ✓
Temperature class 180 (H), utilized according to 155 (F)	**Y75 •** and specified output, CT .. °C or IA …. m above sea level	All except ⑧ and ⑨		– – – ✓ ✓ ✓ ✓ ✓ ✓ ✓ ✓ ✓ ✓
Colors and paint finish				
Standard finish in RAL 7030 stone gray		Only possible for ①, ③, ④, ⑥, ⑧, ⑩ and ⑫		□ □ □ □ □ □ □ □ □ □ □ □ □
Unpainted (only cast-iron parts primed)	**S00**	All	All	○ ○ ○ ○ ○ ○ ○ ○ ○ ○ ○ ○ ○
Unpainted, only primed	**S01**	All	All	✓ ✓ ✓ ✓ ✓ ✓ ✓ ✓ ✓ ✓ ✓ ✓ ✓
Special finish	**S02** *New!*	All, standard version for Performance Line ②, ⑤, ⑦, ⑨, ⑪ and ⑬		✓ ✓ ✓ ✓ ✓ ✓ ✓ ✓ ✓ ✓ ✓ ✓ ✓
Special finish sea air resistant	**S03**	All	All	✓ ✓ ✓ ✓ ✓ ✓ ✓ ✓ ✓ ✓ ✓ ✓ ✓
Special paint for use offshore	**S04**	All	All	✓ ✓ ✓ ✓ ✓ ✓ ✓ ✓ ✓ ✓ ✓ ✓ ✓
Internal coating	**S05**	All	All	– – – ✓ ✓ ✓ ✓ ✓ ✓ ✓ ✓ ✓ ✓
Top coat polyurethane [33)]	**S06** *New!*	All	All	✓ ✓ ✓ ✓ ✓ ✓ ✓ ✓ ✓ ✓ ✓ ✓ ✓
Finish in other standard RAL colors: RAL 1002, 1013, 1015, 1019, 2003, 2004, 3000, 3007, 5007, 5009, 5010, 5012, 5015, 5017, 5018, 5019, 6011, 6019, 6021, 7000, 7001, 7004, 7011, 7016, 7022, 7031, 7032, 7033, 7035, 9001, 9002, 9005 (see Catalog Section 1 "Introduction")	**Y53 •** and finish RAL….	Only possible for ①, ③, ④, ⑥, ⑧, ⑩ and ⑫		✓ ✓ ✓ ✓ ✓ ✓ ✓ ✓ ✓ ✓ ✓ ✓ ✓
Finish in special RAL colors: For RAL colors, see "Special finish in special RAL colors" (see Catalog Section 1 "Introduction")	**Y56 •** *New!* and finish RAL ….	All	All	✓ ✓ ✓ ✓ ✓ ✓ ✓ ✓ ✓ ✓ ✓ ✓ ✓

For legends and footnotes, see Page 2/87.

© Siemens AG 2015

Special versions	Additional identification code **-Z** with order code and plain text if required	Motor category **Motor version**	**Motor type (cast-iron)**	**Motor type – frame size** **71 80 90 100 112 132 160 180 200 225 250 280 315**
		IE2 High Efficiency	1LE1501	**1LE1501 Basic Line** ①
			1LE1601	**1LE1601 Performance Line** ②
			1LE1541	**1LE1541 APAC Line** ③
		IE3 Premium Efficiency	1LE1503	**1LE1503 Basic Line** ④
			1LE1603	**1LE1603 Performance Line** ⑤
			1LE1543	**1LE1543 Basic Line** ⑥
			1LE1643	**1LE1643 Performance Line** ⑦
		IE4 Super Premium Efficiency	1LE1504	**1LE1504 Basic Line** ⑧
			1LE1604	**1LE1604 Performance Line** ⑨
		NEMA Energy Efficient	1LE1521	**1LE1521 Eagle Line Basic** ⑩
			1LE1621	**1LE1621 Eagle Line Performance** ⑪
		NEMA Premium Efficient	1LE1523	**1LE1523 Eagle Line Basic** ⑫
			1LE1623	**1LE1623 Eagle Line Performance** ⑬

1LE1. . . -. . . . . -. . . . -Z	Order code	Motor version	Motor type	Frame size 71 80 90 100 112 132 160 180 200 225 250 280 315
Modular technology – Basic versions [6]				
Mounting of holding brake (standard assignment) [7] [31] [32]	**F01**	Possible only for ⑧ and ⑨, except in combination with order code F90		– – – ✓ ✓ ✓ ✓ ✓ ✓ ✓ ✓ ✓ ✓
Mounting of separately driven fan [28] [34]	**F70**	Possible only for ⑧ and ⑨, except in combination with order code F90		✓ ✓ ✓ ✓ ✓ ✓ ✓ ✓ ✓ ✓ ✓ ✓ ✓
Mounting of 1XP8012-10 (HTL) rotary pulse encoder [8] [9]	**G01**	Possible only for ⑧ and ⑨, except in combination with order code F90		✓ ✓ ✓ ✓ ✓ ✓ ✓ ✓ ✓ ✓ ✓ ✓ ✓
Mounting of 1XP8012-20 (TTL) rotary pulse encoder [8] [9]	**G02**	Possible only for ⑧ and ⑨, except in combination with order code F90		✓ ✓ ✓ ✓ ✓ ✓ ✓ ✓ ✓ ✓ ✓ ✓ ✓
Modular technology – Additional versions				
Brake supply voltage 24 V DC	**F10**	All	All	– – – ✓ ✓ ✓ ✓ ✓ ✓ ✓ ✓ ✓ ✓ ✓
Brake supply voltage 230 V AC, 50/60 Hz	**F11**	All	All	– – – ○ ○ ○ ○ ○ ○ ○ ○ ○ ○
Brake supply voltage 400 V AC, 50/60 Hz [32]	**F12**	All	All	– – – ✓ ✓ ✓ ✓ ✓ ✓ ✓ ✓ ✓ ✓
Mechanical manual brake release with lever (no locking)	**F50**	All	All	– – – ✓ ✓ ✓ ✓ ✓ ✓ ✓ ✓ ✓ ✓
Special technology [5]				
Mounting of LL 861 900 220 rotary pulse encoder [10]	**G04**	Possible only for ⑧ and ⑨, except in combination with order code F90		– – – ✓ ✓ ✓ ✓ ✓ ✓ ✓ ✓ ✓ ✓
Mounting of HOG 9 D 1024 I rotary pulse encoder [10]	**G05**	Possible only for ⑧ and ⑨, except in combination with order code F90		– – – ✓ ✓ ✓ ✓ ✓ ✓ ✓ ✓ ✓ ✓
Mounting of HOG 10 D 1024 I rotary pulse encoder [10]	**G06**	Possible only for ⑧ and ⑨, except in combination with order code F90		– – – ✓ ✓ ✓ ✓ ✓ ✓ ✓ ✓ ✓ ✓
Mounting of POG10D rotary pulse encoder (only in combination with separately driven fan or brake) [11]	**G07**	Possible only for ⑧ and ⑨, except in combination with order code F90		– – – – – – – ✓ ✓ ✓ ✓ ✓ ✓
Mounting of POG9 rotary pulse encoder (only in combination with separately driven fan or brake) [11]	**G08**	Possible only for ⑧ and ⑨, except in combination with order code F90		– – – – – – – ✓ ✓ ✓ ✓ ✓ ✓
Mounting of rotary pulse encoder HOG 10 DN 1024 I, terminal box moisture protection	**G15**	All except in combination with order code F90		– – – ✓ ✓ ✓ ✓ ✓ ✓ ✓ ✓ ✓ ✓
Mounting of rotary pulse encoder HOG 10 DN 1024 I, terminal box dust protection	**G16**	All except in combination with order code F90		– – – ✓ ✓ ✓ ✓ ✓ ✓ ✓ ✓ ✓ ✓
Mounting of rotary pulse encoder HOG 10 DN 1024 I + FSL, (integrated centrifugal switch, speed ... rpm), terminal box moisture protection	**Y74 •** and requ. speed .... rpm	All except in combination with order code F90		– – – – – – – ✓ ✓ ✓ ✓ ✓ ✓
Mounting of rotary pulse encoder HOG 10 DN 1024 I + FSL, (integrated centrifugal switch, speed ... rpm), terminal box dust protection	**Y76 •** and requ. speed .... rpm	All except in combination with order code F90		– – – – – – – ✓ ✓ ✓ ✓ ✓ ✓
Mounting of rotary pulse encoder HOG 10 DN 1024 I + ESL 93, (integrated electronic speed switch, speed ... rpm), terminal box dust protection	**Y79 •** and requ. speed (max 3) .... rpm	All except in combination with order code F90		– – – – – – – ✓ ✓ ✓ ✓ ✓ ✓

For legends and footnotes, see Page 2/87.

© Siemens AG 2015

Options · Cast-iron series 1LE15 Basic Line, 1LE16 Performance Line

Special versions	Additional identification code **-Z** with order code and plain text if required	Motor category													
		Motor version	**Motor type (cast-iron)**	**Motor type – frame size**											
				71	**80**	**90**	**100**	**112**	**132**	**160**	**180**	**200**	**225**	**250**	**280**	**315**
		IE2 High Efficiency	1LE1501	**1LE1501 Basic Line ①**												
			1LE1601				**1LE1601 Performance Line ②**									
			1LE1541								**1LE1541 APAC Line ③**					
		IE3 Premium Efficiency	1LE1503	**1LE1503 Basic Line ④**												
			1LE1603				**1LE1603 Performance Line ⑤**									
			1LE1543									**1LE1543 Basic Line ⑥**				
			1LE1643									**1LE1643 Performance Line ⑦**				
		IE4 Super Premium Efficiency	1LE1504				**1LE1504 Basic Line ⑧**									
			1LE1604				**1LE1604 Performance Line ⑨**									
		NEMA Energy Efficient	1LE1521	**1LE1521 Eagle Line Basic ⑩**												
			1LE1621				**1LE1621 Eagle Line Performance ⑪**									
		NEMA Premium Efficient	1LE1523	**1LE1523 Eagle Line Basic ⑫**												
			1LE1623				**1LE1623 Eagle Line Performance ⑬**									
1LE1. . . - . . . . . - . . . . -Z	Order code	Motor version	Motor type	Frame size												
				71	80	90	100	112	132	160	180	200	225	250	280	315
Mechanical design and degrees of protection																
Low-noise version for 2-pole motors with clockwise direction of rotation	**F77**	Possible only for ⑧ and ⑨, except in combination with order code F90 and only for 2-pole motors		–	–	–	–	–	✓	✓	✓	✓	✓	✓	✓	✓
Low-noise version for 2-pole motors with counter-clockwise direction of rotation	**F78**	Possible only for ⑧ and ⑨, except in combination with order code F90 and only for 2-pole motors		–	–	–	–	–	✓	✓	✓	✓	✓	✓	✓	✓
Prepared for mountings, center hole only	**G40**	Possible only for ⑧ and ⑨, except in combination with order code F90		–	✓	✓	✓	✓	✓	✓	□	□	□	□	□	□
Prepared for mountings with D12 shaft	**G41**	Possible only for ⑧ and ⑨, except in combination with order code F90		–	✓	✓	✓	✓	✓	✓	✓	✓	✓	✓	✓	✓
Prepared for mountings with D16 shaft	**G42**	Possible only for ⑧ and ⑨, except in combination with order code F90		–	O. R.	O. R.	✓	✓	✓	✓	✓	✓	✓	✓	✓	✓
Protective cover for encoder (pre-assembled or supplied loose depending on frame size)	**G43**	Possible only for ⑧ and ⑨, except in combination with order code F90		✓	✓	✓	✓	✓	✓	✓	✓	✓	✓	✓	✓	✓
Protective cover [8) 10) 12)]	**H00**	Possible only for ⑧ and ⑨, except in combination with order code F90		✓	✓	✓	✓	✓	✓	✓	✓	✓	✓	✓	✓	✓
Screwed-on (instead of cast) feet	**H01**	All	All	–	–	–	✓	✓	✓	✓	✓	✓	✓	✓	✓	✓
Vibration-proof version; vibration resistance to Class 3M4 according to IEC 60721-3-3	**H02**	All	All	✓	✓	✓	✓	✓	✓	✓	✓	✓	✓	✓	□	□
Condensation drainage holes	**H03**	All	All	✓	✓	✓	□	□	□	□	□	□	□	□	□	□
Rust-resistant screws (externally)	**H07**	All	All	✓	✓	✓	✓	✓	✓	✓	✓	✓	✓	✓	✓	✓
IP65 degree of protection [14)]	**H20**	All	All	✓	✓	✓	✓	✓	✓	✓	✓	✓	✓	✓	✓	✓
IP54 degree of protection	**H21**	All	All	–	–	–	–	–	–	–	✓	✓	✓	✓	✓	✓
IP56 degree of protection [15)]	**H22**	All	All	✓	✓	✓	✓	✓	✓	✓	✓	✓	✓	✓	✓	✓
Drive-end seal for flange-mounting motors, oil-tight to 0.1 bar [13) 29)]	**H23**	All	All	✓	✓	✓	✓	✓	✓	✓	✓	✓	✓	✓	✓	✓
Grounding brush for converter operation	**L52**	All	All	–	–	–	–	–	–	–	–	–	–	–	✓	✓
Coolant temperature and installation altitude																
Coolant temperature –50 to +40 °C (degree of protection IP54)	**D02**	All	All	–	–	–	✓	✓	✓	✓	✓	✓	✓	✓	✓	✓
Coolant temperature –40 to +40 °C [16)]	**D03**	All	All	✓	✓	✓	✓	✓	✓	✓	✓	✓	✓	✓	✓	✓
Coolant temperature –30 to +40 °C [17)]	**D04**	All	All	✓	✓	✓	✓	✓	✓	✓	✓	✓	✓	✓	✓	✓
Designs in accordance with standards and specifications																
VIK version	**C02**	Not possible for ⑧ and ⑨		–	–	–	✓	✓	✓	✓	✓	✓	✓	✓	✓	✓
Motor without CE marking for export outside EEA (see EU Directive 640/2009)	**D22**	Not possible for ⑧ and ⑨		O	O	O	O	O	O	O	O	O	O	O	O	O
Electrical according to NEMA MG1-12 [18)]	**D30**	All, standard version for Eagle Line ⑩, ⑪, ⑫, ⑬ and ⑥, ⑦		O	O	O	✓	✓	✓	✓	✓	✓	✓	✓	✓	✓
Version according to UL with "Recognition Mark" [18)]	**D31**	All, standard version for Eagle Line ⑩, ⑪, ⑫, ⑬ and ⑥, ⑦		O	O	O	✓	✓	✓	✓	✓	✓	✓	✓	✓	✓
KEMCO Korea Energy Efficiency Label	**D33**	Only possible for ⑥ and ⑦		–	–	–	–	–	–	–	–	O	O	O	O	O
China Energy Efficiency Label	**D34**	All, for Eagle Line ①, ②, ④, ⑤, ⑩, ⑪, ⑫ and ⑬ from frame size 80 upwards		O	O	O	O	O	O	O	O	O	O	O	O	O
Canadian regulations (CSA) [17)]	**D40**	All, standard version for Eagle Line ⑥, ⑦, ⑩, ⑪, ⑫ and ⑬		✓	✓	✓	✓	✓	✓	✓	✓	✓	✓	✓	✓	✓
TR CU product safety certificate EAC for Eurasian customs union [35)]	**D47** *New!*	All	All	–	✓	✓	✓	✓	✓	✓	✓	✓	✓	✓	✓	✓

For legends and footnotes, see Page 2/87.

© Siemens AG 2015

Options · Cast-iron series 1LE15 Basic Line, 1LE16 Performance Line

Special versions	Additional identification code **-Z** with order code and plain text if required	Motor category														
		Motor version	**Motor type (cast-iron)**	**Motor type – frame size**												
				71	**80**	**90**	**100**	**112**	**132**	**160**	**180**	**200**	**225**	**250**	**280**	**315**
		IE2 High Efficiency	1LE1501	**1LE1501 Basic Line** ①												
			1LE1601				**1LE1601 Performance Line** ②									
			1LE1541								**1LE1541 APAC Line** ③					
		IE3 Premium Efficiency	1LE1503	**1LE1503 Basic Line** ④												
			1LE1603				**1LE1603 Performance Line** ⑤									
			1LE1543									**1LE1543 Basic Line** ⑥				
			1LE1643									**1LE1643 Performance Line** ⑦				
		IE4 Super Premium Efficiency	1LE1504				**1LE1504 Basic Line** ⑧									
			1LE1604				**1LE1604 Performance Line** ⑨									
		NEMA Energy Efficient	1LE1521	**1LE1521 Eagle Line Basic** ⑩												
			1LE1621				**1LE1621 Eagle Line Performance** ⑪									
		NEMA Premium Efficient	1LE1523	**1LE1523 Eagle Line Basic** ⑫												
			1LE1623				**1LE1623 Eagle Line Performance** ⑬									
		Motor version	Motor type	Frame size												
1LE1. . . - . . . . . - . . . . -Z	Order code			71	80	90	100	112	132	160	180	200	225	250	280	315
Bearings and lubrication																
Regreasing device with M10 × 1 grease nipple according to DIN 71412-A	**L19**	All, for ②, ⑤, ⑪ and ⑬ from frame size 160 upwards, for ⑨ from frame size 180 upwards and for ⑧ without additional charge		–	–	–	–	–	–	–	✓	✓	✓	✓	○	○
Located bearing DE	**L20**	All	All	✓	✓	✓	✓	✓	✓	✓	✓	✓	✓	✓	✓	✓
Located bearing NDE	**L21**	All	All	✓	✓	✓	✓	✓	✓	□	□	□	□	□	□	□
Bearing design for increased cantilever forces [36]	**L22**	All	All	✓	✓	✓	✓	✓	✓	✓	✓	✓	✓	✓	✓	✓
Regreasing device [1]	**L23**	All, for ②, ⑤, ⑪ and ⑬ from frame size 160 upwards, for ⑨ from frame size 180 upwards and for ⑧ from frame size 280 upwards without additional charge		–	–	–	✓	✓	✓	✓	✓	✓	✓	✓	□	□
Deep-groove bearings reinforced at both ends for DE and NDE, bearing size 63 [19]	**L25**	All, standard version for ②, ⑤, ⑪ and ⑬, for ⑧ from frame size 280 upwards, for ⑤ from frame size 160 upwards		✓	✓	✓	✓	✓	✓	✓	✓	✓	✓	✓	□	□
Reinforced bearings at both DE and NDE, DE bearing for increased cantilever forces	**L28**	All	All	–	–	–	–	–	–	–	✓	✓	✓	✓	✓	✓
Bearing insulation DE	**L50**	All	All	–	–	–	–	–	–	–	–	–	✓	✓	✓	✓
Bearing insulation NDE	**L51**	All	All	–	–	–	–	–	–	–	–	–	✓	✓	✓	✓
Measuring nipple for SPM shock pulse measurement for bearing inspection [1]	**Q01**	All	All	–	–	–	✓	✓	✓	✓	✓	✓	✓	✓	✓	✓
Balance and vibration quantity																
Vibration quantity level A		All	All	□	□	□	□	□	□	□	□	□	□	□	□	□
Vibration quantity level B [20]	**L00**	All	All	✓	✓	✓	✓	✓	✓	✓	✓	✓	✓	✓	✓	✓
Half-key balancing (standard)		All	All	□	□	□	□	□	□	□	□	□	□	□	□	□
Balancing without feather key, feather key is supplied	**L01**	All	All	✓	✓	✓	✓	✓	✓	✓	✓	✓	✓	✓	✓	✓
Full-key balancing	**L02**	All	All	✓	✓	✓	✓	✓	✓	✓	✓	✓	✓	✓	✓	✓
Shaft and rotor																
Shaft extension with standard dimensions, without feather keyway	**L04**	All	All	–	–	–	✓	✓	✓	✓	✓	✓	✓	✓	✓	✓
Standard cylindrical shaft extension	**L05**	All	All	✓	✓	✓	✓	✓	✓	✓	✓	✓	✓	✓	✓	✓
Standard shaft made of stainless steel (e.g. 1.4021)	**L06**	All	All	✓	✓	✓	✓	✓	✓	✓	✓	✓	✓	✓	✓	✓
Concentricity of shaft extension in accordance with DIN 42955 Tolerance R	**L07**	All	All	✓	✓	✓	✓	✓	✓	✓	✓	✓	✓	✓	✓	✓
Concentricity of shaft extension, coaxiality and linear movement in accordance with DIN 42955 Tolerance R for flange-mounting motors	**L08**	All	All	✓	✓	✓	✓	✓	✓	✓	✓	✓	✓	✓	✓	✓
Non-standard shaft extension, DE [21]	**Y58** • and customer specifications	All	All	✓	✓	✓	✓	✓	✓	✓	✓	✓	✓	✓	✓	✓
Non-standard shaft extension, NDE [21]	**Y59** • and customer specifications	All	All	✓	✓	✓	✓	✓	✓	✓	✓	✓	✓	✓	✓	✓
Special shaft steel as requested by customer	**Y60** • and customer specifications	All	All	–	–	–	O. R.	O. R.	O. R.	O. R.	O. R.	O. R.	O. R.	O. R.	O. R.	O. R.

For legends and footnotes, see Page 2/87.

© Siemens AG 2015

Options · Cast-iron series 1LE15 Basic Line, 1LE16 Performance Line

Special versions	Additional identification code **-Z** with order code and plain text if required	Motor category														
		Motor version	**Motor type (cast-iron)**	**Motor type – frame size**												
				71	**80**	**90**	**100**	**112**	**132**	**160**	**180**	**200**	**225**	**250**	**280**	**315**
		IE2 High Efficiency	1LE1501	**1LE1501 Basic Line ①**												
			1LE1601				**1LE1601 Performance Line ②**									
			1LE1541								**1LE1541 APAC Line ③**					
		IE3 Premium Efficiency	1LE1503	**1LE1503 Basic Line ④**												
			1LE1603				**1LE1603 Performance Line ⑤**									
			1LE1543									**1LE1543 Basic Line ⑥**				
			1LE1643									**1LE1643 Performance Line ⑦**				
		IE4 Super Premium Efficiency	1LE1504				**1LE1504 Basic Line ⑧**									
			1LE1604				**1LE1604 Performance Line ⑨**									
		NEMA Energy Efficient	1LE1521	**1LE1521 Eagle Line Basic ⑩**												
			1LE1621				**1LE1621 Eagle Line Performance ⑪**									
		NEMA Premium Efficient	1LE1523	**1LE1523 Eagle Line Basic ⑫**												
			1LE1623				**1LE1623 Eagle Line Performance ⑬**									
		Motor version	Motor type	Frame size												
1LE1. . . - . . . . . - . . . . -Z	Order code			71	80	90	100	112	132	160	180	200	225	250	280	315
Heating and ventilation																
Sheet metal fan cover	**F74**	All, standard version for Performance Line ②, ⑤, ⑦, ⑨, ⑪, ⑬ and frame sizes 71 to 90		□	□	□	✓	✓	✓	✓	✓	✓	✓	✓	✓	✓
Metal external fan [22) 28)]	**F76**	All	All	✓	✓	✓	✓	✓	✓	✓	✓	✓	✓	✓	✓	✓
Without external fan and without fan cover	**F90**	All	All	✓	✓	✓	✓	✓	✓	✓	✓	✓	✓	✓	✓	✓
Anti-condensation heating for 230 V	**Q02**	All	All	✓	✓	✓	✓	✓	✓	✓	✓	✓	✓	✓	✓	✓
Anti-condensation heating for 115 V	**Q03**	All	All	✓	✓	✓	✓	✓	✓	✓	✓	✓	✓	✓	✓	✓
Separately driven fan with non-standard voltage and/or frequency	**Y81** • and customer specifications	All	All	–	–	–	–	–	–	–	–	–	✓	✓	✓	✓
Rating plate and extra rating plates																
Extra rating plate for voltage tolerance [23)]	**B07**	All, with the exception of 8-pole motors		✓	✓	✓	✓	✓	✓	✓	✓	✓	✓	✓	✓	✓
Second rating plate, loose	**M10**	All	All	✓	✓	✓	✓	✓	✓	✓	✓	✓	✓	✓	✓	✓
Rating plate, stainless steel	**M11**	All, for ②, ⑤, ⑪ and ⑬ without additional charge, for ⑨ normal version		✓	✓	✓	✓	✓	✓	✓	✓	✓	✓	✓	✓	✓
Extra rating plate or rating plate with deviating rating plate data	**Y80** • and customer specifications	All	All	✓	✓	✓	✓	✓	✓	✓	✓	✓	✓	✓	✓	✓
Extra rating plate with customer specifications	**Y82** • and customer specifications	All	All	✓	✓	✓	✓	✓	✓	✓	✓	✓	✓	✓	✓	✓
Additional information on rating plate and on package label (max. 20 characters)	**Y84** • and customer specifications	All	All	✓	✓	✓	✓	✓	✓	✓	✓	✓	✓	✓	✓	✓
Adhesive label, supplied loose (Printed with: Article No., Serial No.: 2 lines of text)	**Y85** • and customer specifications	All	All	–	–	–	✓	✓	✓	✓	✓	✓	✓	✓	✓	✓
Extension of the liability for defects																
Extension of the liability for defects by 12 months to a total of 24 months (2 years) from delivery [24)]	**Q80**	All, for Performance Line ②, ⑤, ⑦, ⑨, ⑪ and ⑬ 36 months standard		–	–	–	–	–	–	–	✓	✓	✓	✓	✓	✓
Extension of the liability for defects by 24 months to a total of 36 months (3 years) from delivery [24)]	**Q82**	All, for Performance Line ②, ⑤, ⑦, ⑨, ⑪ and ⑬ 36 months standard		–	–	–	–	–	–	–	✓	✓	✓	✓	✓	✓
Packaging, safety notes, documentation and test certificates																
Acceptance test certificate 3.1 according to EN 10204 [25)]	**B02**	All	All	✓	✓	✓	✓	✓	✓	✓	✓	✓	✓	✓	✓	✓
Printed German/English Operating Instructions enclosed [26)]	**B04**	All	All	–	–	–	✓	✓	✓	✓	✓	✓	✓	✓	✓	✓
Document - Electrical data sheet	**B60**	All	All	–	–	–	✓	✓	✓	✓	✓	✓	✓	✓	✓	✓
Document - Order dimensional drawing	**B61**	All	All	–	–	–	✓	✓	✓	✓	✓	✓	✓	✓	✓	✓
Standard test (routine test) with acceptance	**B65**	All	All	–	–	–	✓	✓	✓	✓	✓	✓	✓	✓	✓	✓
Type test with heat run for horizontal motors, without acceptance	**B82**	All	All	✓	✓	✓	✓	✓	✓	✓	✓	✓	✓	✓	✓	✓
Type test with heat run for horizontal motors, with acceptance	**B83**	All	All	✓	✓	✓	✓	✓	✓	✓	✓	✓	✓	✓	✓	✓
Connected in star for dispatch	**M01**	All	All	✓	✓	✓	✓	✓	✓	✓	✓	✓	✓	✓	✓	✓
Connected in delta for dispatch	**M02**	All	All	✓	✓	✓	✓	✓	✓	✓	✓	✓	✓	✓	✓	✓

For legends and footnotes, see Page 2/87.

© Siemens AG 2015

◘ Standard version
○ Without additional charge
• This order code only determines the price of the version – Additional plain text is required
✓ With additional charge
O. R. Possible on request
– Not possible

1) Up to frame size 160 not possible when brake is mounted.

2) Evaluation with appropriate tripping unit (see Catalog IC 10) is recommended.

3) Parallel Whitworth threaded pipe ISO 228 (DIN 259) BSPP (British Standard Pipe Parallel) Threaded pipe for connections not sealed in the thread (cylindrical), external = G.

4) Cannot be used for motors in UL version (order code **D31**). The grease lifetime specified in Catalog Section 1 "Introduction" refers to CT 40 °C. When the coolant temperature rises by 10 K, the grease service lifetime or relubrication interval is halved.

5) Not possible for 1LE15 and 1LE16 motors with increased output.

6) A second shaft extension is not possible. Please inquire for mounted brakes.

7) For order codes **F10**, **F11** and **F12**, the brake supply voltage must be specified or ordered.

8) The 1XP8 rotary pulse encoders are fitted with a protective cover as standard. The protective cover is omitted at the factory when a rotary pulse encoder is combined with a separately driven fan, because in this case the rotary pulse encoder is installed under the fan cover.

9) In combination with a separately driven fan (order code **F70**) the 1XP8032-10 rotary pulse encoder is used instead of 1XP8012-10 or 1XP8032-20 is used instead of 1XP8012-20.

10) The LL and HOG rotary pulse encoders up to frame size 160 are fitted with a protective cover as standard. The protective cover is omitted at the factory when a rotary pulse encoder is combined with a separately driven fan, because in this case the rotary pulse encoder is installed under the fan cover.

11) Option (encoder mounting) is only possible for motors with a mounted separately driven fan or for naturally cooled motors (without a separately driven fan). This option can be used in combination with brakes of type KFB. This option cannot be used in combination with brakes of type 2LM8.

12) Order code **H00** provides mechanical protection for encoders.

13) Not possible for type of construction IM V3.

14) Not possible in combination with HOG 9 D 1024I rotary pulse encoder (order code **G05**) and/or brake 2LM8 (order code **F01**).

15) Not possible in combination with brake 2LM8 – order code **F01**.

16) In connection with mountings, the respective technical specifications must be observed, please inquire before ordering.

17) The rated voltage is indicated on the rating plate without voltage range. Order code **D40** does not authorize importing into Canada. The North America export versions Eagle Line 1LE1521/1LE1621 NEMA Energy Efficient and 1LE1523/1LE1623
NEMA Premium Efficient are available for this purpose.

18) Possible up to 600 V max. The rated voltage is indicated on the rating plate without voltage range. Order codes **D30** and **D31** do not authorize importing into USA and Mexico. The North America export versions Eagle Line 1LE1521/1LE1621 NEMA Energy Efficient and 1LE1523/1LE1623 NEMA Premium Efficient are available for this purpose.

19) For Performance Line motors (all frame sizes) and Basic Line motors (from frame size 280) in the standard version.

20) On request for 2-pole motors (concerns frame sizes 225 to 315).

21) When motors are ordered that have a longer or shorter shaft extension than normal, the required position and length of the feather keyway must be specified in a sketch. It must be ensured that only feather keys in accordance with DIN 6885, Form A are permitted to be used. The feather keyway is positioned centrally on the shaft extension. The length is defined by the manufacturer in accordance with the appropriate standard. Not valid for: Conical shafts, non-standard threaded journals, non-standard shaft tolerances, friction welded journals, extremely "thin" shafts, special geometry dimensions (e.g. square journals), hollow shafts. Valid for non-standard shaft extensions DE or NDE. The feather keys are supplied in every case. For order codes **Y58**, **Y59** and **L05**:
– Dimensions D and DA ≤ Inner diameter of roller bearing (see tables under "Dimensions")
– Dimensions E and EA ≤2 × length E (normal) of the shaft extension.

22) Converter operation is permitted for 1LE1 motors with metal external fans.

23) Can be ordered for 230 VΔ/400 VY or 400 VΔ/690 VY (voltage code "**22**" or "**34**"). Not possible for 8-pole motors and in combination with order code **D34**.

24) Wear parts (bearings) are excluded from the warranty extension.

25) The delivery time for the factory test certificate may differ from the delivery time for the motor.

26) The Operating Instructions (compact) are available in PDF format for all official EU languages at
http://support.automation.siemens.com/WW/view/en/10803948/133300.

27) With **H08**, feet dimensions C and CA differ from EN 50347! Further information is available in DT Configurator (see Appendix, "Tools and Configuring").

28) Order codes **F70** and **F76** cannot be combined.

29) Not possible in combination with order codes **Q72** and **Q78**.

30) For frame sizes 100 to 132 only possible in combination with order code **R50**.

31) Not possible in combination with order codes **N05**, **N06**, **N07**, **N08** and **N11**.

32) For frame size 315, when combining order codes **F01** and **F12**, the rectifier for the brake will be supplied separately as a single part.

33) Order code **S06** cannot be combined with order code **S00**, **S01** and **S02**. It can be combined with **Y53** and **Y56** on request.

34) Order codes **F70** (separately driven fan) and **H02** (vibration-proof version) cannot be combined for motors in frame sizes 71, 80 and 90.

35) Please note the additional use of order code **D22** "Motor without CE marking for export outside EEA (see EU Directive 640/2009)".

36) A minimum cantilever force F_{min} of 0.5 · F_{max} is required for NU bearings (cylindrical roller bearings) in contrast to bearings. Cylindrical roller bearings are not suitable for coupling output or for brief periods of no-load operation without cantilever force.

© Siemens AG 2015

2

Overview

Couplings

The motor from Siemens is connected to the machine or gear unit through a coupling. Siemens is an important coupling manufacturer with a wide range of products.

For standard applications, Siemens recommends that flexible couplings, types N-EUPEX and RUPEX or torsionally rigid couplings, types ARPEX and ZAPEX are used. For special applications, FLUDEX and ELPEX-S couplings are recommended.

Available from:

Siemens contact partner - ordering from catalog
Siemens MD 10.1 "FLENDER Standard Couplings"

or

SIEMENS AG
Kupplungswerk Mussum
Industriepark Bocholt
Schlavenhorst 100
46395 Bocholt, Germany
Tel. +49 (2871) 922185
Fax +49 (2871) 922579

www.siemens.com
E-mail: flendercouplings@siemens.com

Taper pins to DIN 258 with threaded ends and constant taper lengths

Taper pins are used for components that are repeatedly removed. The drilled hole is ground conical using a conical reamer until the pin can be pushed in by hand until the cone shoulder lies approx. 3 to 4 mm above the rim of the hole.

It can then be driven in using a hammer until it is correctly seated. The pin is removed from the drilled hole by screwing on the nut and tightening it.

Standardized taper pins are available from general engineering suppliers.

Available from e.g.:

Otto Roth GmbH & Co. KG
Rutesheimer Strasse 22
70499 Stuttgart, Germany
Tel. +49 (711) 1388-0
Fax. +49 (711) 1388-233

www.ottoroth.de
E-mail: info@ottoroth.de

Foundation block acc. to DIN 799

The foundation blocks are inserted into the stone foundation and embedded in concrete. They are used for fixing machines of medium size, slide rails, pedestal bearings, baseframes, etc. After the fixing bolts have been unscrewed, the machine can be dragged without it having to be lifted.

When the machine is initially installed, the foundation block that is bolted to the machine (without washers) and fitted with taper pins is not embedded with concrete until the machine has been fully aligned. In this case, the machine is positioned 2 to 3 mm lower. The difference in shaft height is compensated by inserting shims on final installation. The taper pins safeguard the exact position of the machine when it is repeatedly removed and replaced without the need for realignment.

Available from:

Lütgert & Co. GmbH
Postfach 42 51
33276 Gütersloh, Germany
Tel. +49 (5241) 7407-0
Fax +49 (5241) 7407-90

www.luetgert-antriebe.de
E-mail: info@luetgert-antriebe.de

Slide rails with fixing bolts and tensioning screws according to DIN 42923

Slide rails are used to tension the belt of a machine easily and conveniently when a belt tightener is not available. They are fixed to the base using stone bolts or foundation blocks.

The assignment of slide rails to motor size can be found in DIN 42923. For motors of frame sizes 355 to 450, there are no standardized slide rails (please inquire).

Available from:

Lütgert & Co. GmbH
Postfach 42 51
33276 Gütersloh, Germany
Tel. +49 (5241) 7407-0
Fax +49 (5241) 7407-90

www.luetgert-antriebe.de
E-mail: info@luetgert-antriebe.de

More information

Spare motors and repair parts

- Supply commitment for spare motors and repair parts following delivery of the motor:
  - For up to 3 years, in the event of total motor failure, Siemens will supply a comparable motor with regard to the mounting dimensions and functions (the type series may vary).
  - Spare parts will be available for up to five years.
  - Within the time period of up to five years, Siemens will provide information about spare parts and will supply documents when required.
  - Replacement motors delivered after the active production of the machine series are also identified with "Spare motor" on the rating plate. Spare parts are offered only on request for these motors.
- When repair parts are ordered, the following details must be provided:
  - Designation and part number
  - Article No. and factory number of the motor.

  Example for ordering a fan cover 1LE1002, frame size 112 M, 4-pole:

  Fan cover No. 7.40,
  1LE1002-1BB23-4AA4-Z, factory No. E1001/5236197_01_001
- For bearing types, see Catalog Section 1 "Introduction".
- Repair parts for 1MJ6, 1MJ7, 1MJ8, 1MJ1, 1ME8, 1ML8 are available on request.
- For standard components, a supply commitment does not apply.
- Support – Hotline
  In Germany
  Tel.: +49 (180) 5050448

You will find telephone numbers for other countries on our Internet site:
www.siemens.com/automation/service&support

© Siemens AG 2015

Overview

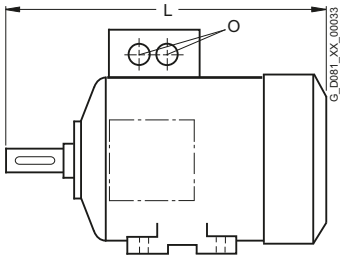

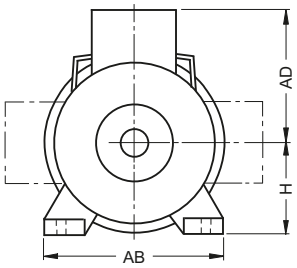

Frame size	Type	Dimension L	AD	H	AB	O
71 M	Cast-iron series, self-ventilated					
	1LE1501, 1LE1521, 1LE1503-, 1LE1523-0CA2, 0CB2, 0CC2	240	148	71	132	2 × M25 × 1.5
	1LE1503-, 1LE1523-0CA3, 0CB3, 0CC3	280	148	71	132	2 × M25 × 1.5
80 M	Aluminum series, self-ventilated					
	1LE1001	292	121	80	150	1 × M25 × 1.5
	Aluminum series, forced-air cooled or naturally cooled					
	1LE1001	253	121	80	150	1 × M25 × 1.5
	Cast-iron series, self-ventilated					
	1LE1501, 1LE1521, 1LE1503-, 1LE1523-0DA2, 0DB2, 0DC2	292	158	80	150	2 × M25 × 1.5
	1LE1503-, 1LE1523-0DA3, 0DB3, 0DC3	327	158	80	150	2 × M25 × 1.5
90 S/ 90 L	Aluminum series, self-ventilated					
	1LE1001	347	126	90	165	1 × M25 × 1.5
	Aluminum series, forced-air cooled or naturally cooled					
	1LE1001	295	126	90	165	1 × M25 × 1.5
	Cast-iron series, self-ventilated					
	1LE1501, 1LE1521, 1LE1503-, 1LE1523-0EA0, 0EB0, 0EC0	347	163	90	165	2 × M25 × 1.5
	1LE1503-, 1LE1523-0EA4, 0EB4, 0EC4	387	163	90	165	2 × M25 × 1.5
100 L	Aluminum series, self-ventilated					
	1LE1001, 1LE1002, 1LE1011, 1LE1012, 1LE1021	396 [1]	166	100	196	2 × M32 × 1.5
	Aluminum series, self-ventilated with increased output					
	1LE1001, 1LE1002	431 [1]	166	100	196	2 × M32 × 1.5
	Aluminum series, forced-air cooled or naturally cooled					
	1LE1001, 1PC1001, 1LE1002, 1PC1002, 1LE1021	322	166	100	196	2 × M32 × 1.5
	Aluminum series, self-ventilated					
	1LE1003, 1LE1023	431	166	100	196	2 × M32 × 1.5
	Aluminum series, forced-air cooled					
	1LE1023	357	166	100	196	2 × M32 × 1.5
	Cast-iron series, self-ventilated					
	1LE1501, 1LE1503, 1LE1521, 1LE1601, 1LE1603, 1LE1621	389	193	100	196	2 × M32 × 1.5
	1LE1523, 1LE1623	425	193	100	196	2 × M32 × 1.5

Frame size	Type	Dimension L	AD	H	AB	O
112 M	Aluminum series, self-ventilated					
	1LE1001, 1LE1002, 1LE1011, 1LE1012, 1LE1021	389 [1]	177	112	226	2 × M32 × 1.5
	Aluminum series, self-ventilated with increased output					
	1LE1001, 1LE1002	414 [1]	177	112	226	2 × M32 × 1.5
	Aluminum series, forced-air cooled or naturally cooled					
	1LE1001, 1PC1001, 1LE1002, 1PC1002, 1LE1021	311	177	112	226	2 × M32 × 1.5
	Aluminum series, self-ventilated					
	1LE1003, 1LE1023	414	177	112	226	2 × M32 × 1.5
	Aluminum series, forced-air cooled					
	1LE1023	336	177	112	226	2 × M32 × 1.5
	Cast-iron series, self-ventilated					
	1LE1501, 1LE1503, 1LE1521, 1LE1601, 1LE1603, 1LE1621	382	195	112	226	2 × M32 × 1.5
	1LE1523, 1LE1623	409	195	112	226	2 × M32 × 1.5
132 S/M	Aluminum series, self-ventilated					
	1LE1001, 1LE1002, 1LE1011, 1LE1012, 1LE1021	465 [1]	202	132	256	2 × M32 × 1.5
	Aluminum series, self-ventilated with increased output					
	1LE1001, 1LE1002	515 [1]	202	132	256	2 × M32 × 1.5
	Aluminum series, forced-air cooled or naturally cooled					
	1LE1001, 1PC1001, 1LE1002, 1PC1002, 1LE1021	381	202	132	256	2 × M32 × 1.5
	Aluminum series, self-ventilated					
	1LE1003-, 1LE1023-					
	1CA0, 1CC0, 1CC2	465	202	132	256	2 × M32 × 1.5
	1CA1, 1CB0, 1CB2, 1CC3	515	202	132	256	2 × M32 × 1.5
	Aluminum series, forced-air cooled					
	1LE1023-					
	1CA0, 1CC0, 1CC2	381	202	132	256	2 × M32 × 1.5
	1CA1, 1CB0, 1CB2, 1CC3	431	202	132	256	2 × M32 × 1.5
	Cast-iron series, self-ventilated					
	1LE1501, 1LE1503, 1LE1521, 1LE1601, 1LE1603, 1LE1621	457	215	132	256	2 × M32 × 1.5
	1LE1523-, LE1623-					
	1CA0, 1CC0, 1CC2	458	215	132	256	2 × M32 × 1.5
	1CA1, 1CB0, 1CB2, 1CC3	508	215	132	256	2 × M32 × 1.5

[1] The length is specified as far as the tip of the fan cover.

[2] Only for pole-changing types 1LE1011-1DP6 and 1LE1012-1DQ6 the dimension L is 664 mm.

© Siemens AG 2015

2

Overview (continued)

Frame size	Type	Dimension L	AD	H	AB	O
160 M/L	Aluminum series, self-ventilated					
	1LE1001, 1LE1002, 1LE1011, 1LE1012, 1LE1021	604 [1) 2)]	237	160	300	2 × M40 × 1.5
	Aluminum series, self-ventilated with increased output					
	1LE1001, 1LE1002	664 [1)]	237	160	300	2 × M40 × 1.5
	Aluminum series, forced-air cooled or naturally cooled					
	1LE1001, 1PC1001, 1LE1002, 1PC1002, 1LE1021	510	237	160	300	2 × M40 × 1.5
	Cast-iron series, self-ventilated					
	1LE1501, 1LE1503, 1LE1521, 1LE1601, 1LE1603, 1LE1621	594	265	160	300	2 × M40 × 1.5
160 M	Aluminum series, self-ventilated					
	1LE1003, 1LE1023	604	237	160	300	2 × M40 × 1.5
	Aluminum series, forced-air cooled					
	1LE1023	510	237	160	300	2 × M40 × 1.5
	Cast-iron series, self-ventilated					
	1LE1523, 1LE1623	596	261	160	300	2 × M40 × 1.5
160 L	Aluminum series, self-ventilated					
	1LE1003, 1LE1023	664	237	160	300	2 × M40 × 1.5
	Aluminum series, forced-air cooled					
	1LE1023	570	237	160	300	2 × M40 × 1.5
	Cast-iron series, self-ventilated					
	1LE1523, 1LE1623	656	261	160	300	2 × M40 × 1.5
180 M	Aluminum series, self-ventilated					
	1LE1001					
	1EA2, 1EB2	668	286	180	339	2 × M40 × 1.5
	Cast-iron series, self-ventilated					
	1LE15.1-, 1LE16.1-					
	1EA2, 1EB2	668	286	180	339	2 × M40 × 1.5
	1EA6	698				
	1LE15.3-, 1LE16.3-					
	1EB2	668	286	180	339	2 × M40 × 1.5
	1EA2	698				
180 L	Aluminum series, self-ventilated					
	1LE1001					
	1EB4, 1EC4, 1ED4	668	286	180	339	2 × M40 × 1.5
	1EA6, 1EB6, 1EC6, 1ED6	698				
	Cast-iron series, self-ventilated					
	1LE15.1-, 1LE16.1-					
	1EC4, 1EC6	668	286	180	339	2 × M40 × 1.5
	1EB6	698				
	1LE15.3-, 1LE16.3-					
	1EC4	668	286	180	339	2 × M40 × 1.5
	1EB4	698				
200 L	Aluminum series, self-ventilated					
	1LE1001					
	2AA4, 2AA5, 2AB5, 2AC4, 2AC5, 2AD5	721	315	200	378	2 × M50 × 1.5
	2AA6, 2AB6, 2AC6, 2AD6	746				
	Cast-iron series, self-ventilated					
	1LE15.1-, 1LE16.1-					
	2AA4, 2AA5, 2AB5, 2AC4, 2AC5	721	315	200	378	2 × M50 × 1.5
	2AA6	746				
	1LE15.3-, 1LE16.3-					
	2AA4, 2AC4	721	315	200	378	2 × M50 × 1.5
	2AA5, 2AB5, 2AC5	746				

Frame size	Type	Dimension L	AD	H	AB	O
225 S	Cast-iron series, self-ventilated					
	1LE15.1-, 1LE16.1-					
	2BB0, 2BD0	788	338	225	436	2 × M50 × 1.5
	1LE15.3-, 1LE16.3-					
	2BB0	788	338	225	436	2 × M50 × 1.5
225 M	Cast-iron series, self-ventilated					
	1LE15.1-, 1LE16.1-					
	2BA2, 2BA6	818	338	225	436	2 × M50 × 1.5
	2BB2, 2BB6, 2BC2, 2BC6, 2BD6	848				
	1LE15.3-, 1LE16.3-					
	2BA2	818	338	225	436	2 × M50 × 1.5
	2BB2, 2BC2	848				
250 M	Cast-iron series, self-ventilated					
	1LE15.1-, 1LE16.1-					
	2CA2, 2CA6, 2CB2, 2CC2, 2CC6, 2CD2, 2CD6	887	410	250	490	2 × M63 × 1.5
	2CB6	957				
	1LE15.3-, 1LE16.3-					
	2CA2, 2CB2, 2CC2	887	410	250	490	2 × M63 × 1.5
280 S	Cast-iron series, self-ventilated					
	1LE15.1-, 1LE16.1-					
	2DA0, 2DB0, 2DC0, 2DD0	960	433	280	540	2 × M63 × 1.5
	1LE15.3, 1LE16.3					
	2DA0, 2DB0, 2DC0	960	433	280	540	2 × M63 × 1.5
280 M	Cast-iron series, self-ventilated					
	1LE15.1-, 1LE16.1-					
	2DA2, 2DB2, 2DC2, 2DC6, 2DD2, 2DD6	960	433	280	540	2 × M63 × 1.5
	2DA6, 2DB6	1070				
	1LE15.3-, 1LE16.3-					
	2DC2	960	433	280	540	2 × M63 × 1.5
	2DA2, 2DB2	1070				
315 S	Cast-iron series, self-ventilated					
	1LE15.1-, 1LE16.1-					
	3AA0	1052	515	315	610	2 × M63 × 1.5
	3AB0, 3AC0, 3AD0	1082				
	1LE15.3-, 1LE16.3-					
	3AA0	1052	515	315	610	2 × M63 × 1.5
	3AB0, 3AC0	1082				
315 M	Cast-iron series, self-ventilated					
	1LE15.1-, 1LE16.1-					
	3AC2, 3AD2	1082	515	315	610	2 × M63 × 1.5
	3AA2	1217				
	3AB2	1247				
	1LE15.3-, 1LE16.3-					
	3AA2	1217	515	315	610	2 × M63 × 1.5
	3AB2, 3AC2	1247				
315 L	Cast-iron series, self-ventilated					
	1LE15.1-, 1LE16.1-					
	3AA4	1217	515	315	610	2 × M63 × 1.5
	3AB4, 3AC4, 3AC5, 3AD4, 3AD5, 3AD6	1247				
	3AA5, 3AA6	1372				
	3AB5, 3AB6, 3AC6	1402				
	1LE15.3-, 1LE16.3-					
	3AA4	1217	515	315	610	2 × M63 × 1.5
	3AB4, 3AC4	1247	515	315	610	2 × M63 × 1.5
	3AA5	1372				
	3AB5, 3AC5, 3AC6	1402				

© Siemens AG 2015

Notes on the dimensions

Overview

- Dimensional drawings according to EN 50347 and IEC 60072.
- Fits
  The shaft extensions specified in the dimension tables (DIN 748) and centering spigot diameters (EN 50347) are machined with the following fits:

Dimension designation	ISO fit ISO 286-2	
D, DA	to 30	j6
	over 30 to 50	k6
	over 50	m6
N	to 250	j6
	over 250	h6
F, FA		h9
K		H17
S	Flange (FF)	H17

  The drilled holes of couplings and belt pulleys should have an ISO fit of at least H7.

- Dimension tolerances
  For the following dimensions, the admissible deviations are given below:

Dimension designation	Dimension	Admissible deviation
H	to 250	– 0.5
	over 250	– 1.0
E, EA		– 0.5

  Keyways and feather keyways (dimensions GA, GC, F and FA) are made in compliance with DIN 6885 Part 1.
- All dimensions are specified in mm.

Dimension sheet generator (within the Drive Technology Configurator)

Overview

A dimensional drawing can be created in the Drive Technology (DT) Configurator for every configurable motor. A dimensional drawing can be requested for every other motor.

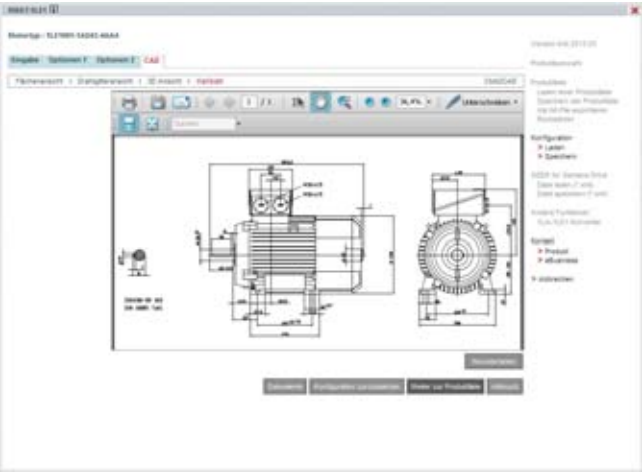

When a complete Article No. is entered with or without order codes, a dimensional drawing can be called up under the "Documentation" tab.
These dimensional drawings can be presented in different views and sections and printed.
The corresponding dimension sheets can be exported, saved and processed further in DXF format (interchange/import format for CAD systems) or as bitmap graphics.

Online access in the Siemens Industry Mall

The DT Configurator is integrated into the Siemens Industry Mall and can be used on the Internet without installation.
English: www.siemens.com/dt-configurator

Offline access in the Interactive Catalog CA 01

The DT Configurator is also part of the Interactive Catalog CA 01 on DVD – the offline version of Siemens Industry Mall. CA 01 can be ordered from the relevant Siemens sales office or via the Internet: www.siemens.com/automation/CA01

© Siemens AG 2015

Dimensional drawings

Type of construction IM B3

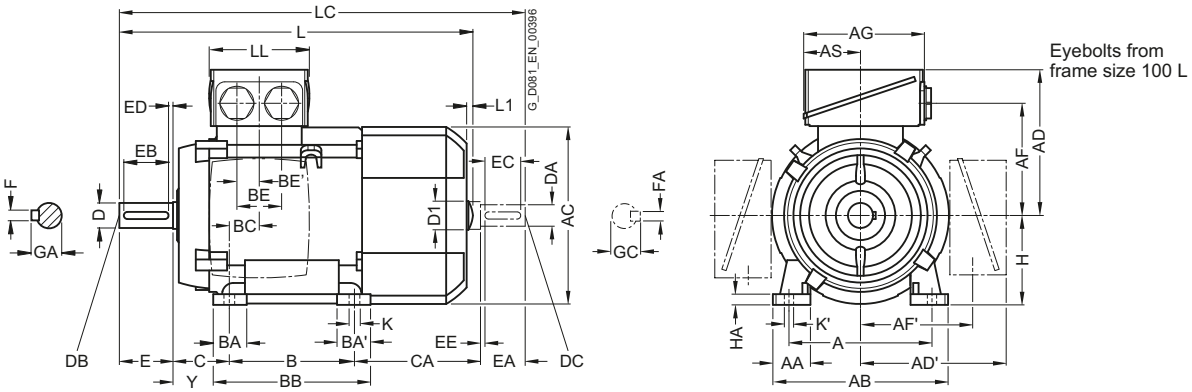

Types of construction IM B5 and IM V1

For flange dimensions, see Page 1/34 (**Z** = the number of retaining holes)

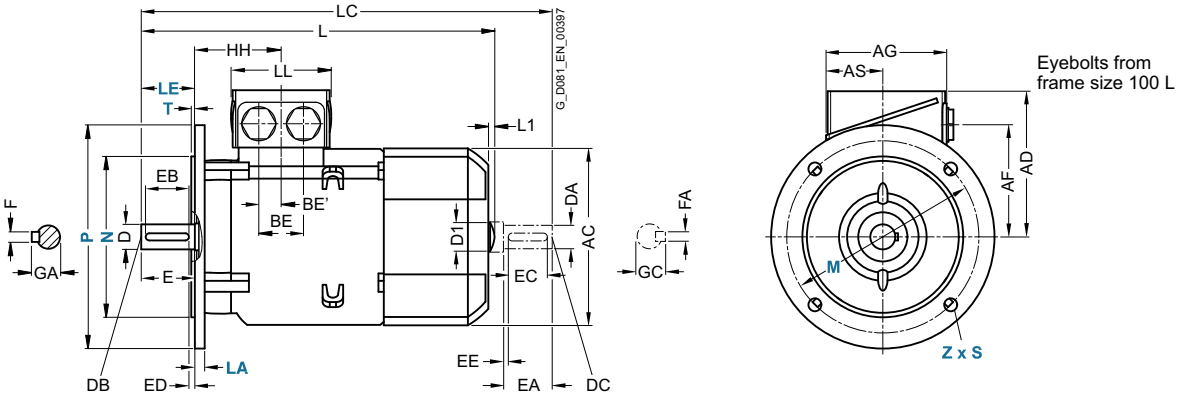

For motor			Dimension designation acc. to **IEC**																				
Frame size	Motor type 1LE100. 1LE101. 1LE1021	No. of poles	A	AA	AB	AC	AD	AD'	AF	AF'	AG	AS	B*	BA	BA'	BB	BC	BE	BE'	C	CA*	H	HA	Y
80 M	1LE1001 1LE1041	2, 4, 6	125	30.5	150	159	121	–	96.5	–	93	43	100	32	–	118	23	–	18 [1]	50	–	80	8	41
90 S		2, 4, 6	140	30.5	165	178	126	–	101.5	–	93	43	100	33	–	143	22.5	–	18 [1]	56	–	90	10	47
90 L		2, 4, 6	140	30.5	165	178	126	–	101.5	–	93	43	125	33	–	143	22.5	–	18 [1]	56	–	90	10	47
100 L	All	2, 4, 6, 8	160	42	196	198	166	166	125.5	125.5	135	63.5	140	37.5	–	176	33.5	50	25	63	141	100	12	45
112 M	All	2, 4, 6, 8	190	46	226	222	177	177	136.5	136.5	135	63.5	140	35.4	–	176	26	50	25	70	129.7	112	12	52
132 S	All	2, 4, 6, 8	216	53	256	262	202	202	159.5	159.5	155	70.5	140	38	76	218	26.5	48	24	89	128.5	132	15	69
132 M	All	2, 4, 6, 8	216	53	256	262	202	202	159.5	159.5	155	70.5	178	38	76	218	26.5	48	24	89	128.5	132	15	69
160 M	All	2, 4, 6, 8	254	60	300	314	236.5	236.5	190	190	175	77.5	210	44	89	300	47	57	28.5	108	148	160	18	85
160 L	All	2, 4, 6, 8	254	60	300	314	236.5	236.5	190	190	175	77.5	254	44	89	300	47	57	28.5	108	148 [2]	160	18	85
180 M	All	2, 4 ,6	279	65	339	356	259	259	212.5	212.5	175	77.5	241/ 279	80	100	328	30	57	28.5	121	–	180	20	95
180 L	All	2, 4 ,6	279	65	339	356	259	259	212.5	212.5	175	77.5	241/ 279	80	100	328	30	57	28.5	121	–	180	20	95
200 L	All	2, 4, 6	318	70	378	396	296	296	238	238	225	102.5	305	90	100	355	45	75	37.5	133	–	200	25	108

* This dimension is assigned in EN 50347 to the frame size listed.

[1] Connecting hole for terminal box is on the side at the rear of the terminal box.

[2] Only for pole-changing types 1LE1011-1DP6 and 1LE1012-1DQ6 the dimension CA* is 208 mm.

© Siemens AG 2015

Dimensional drawings (continued)

Type of construction IM B35

For flange dimensions, see Page 1/34 (**Z** = the number of retaining holes)

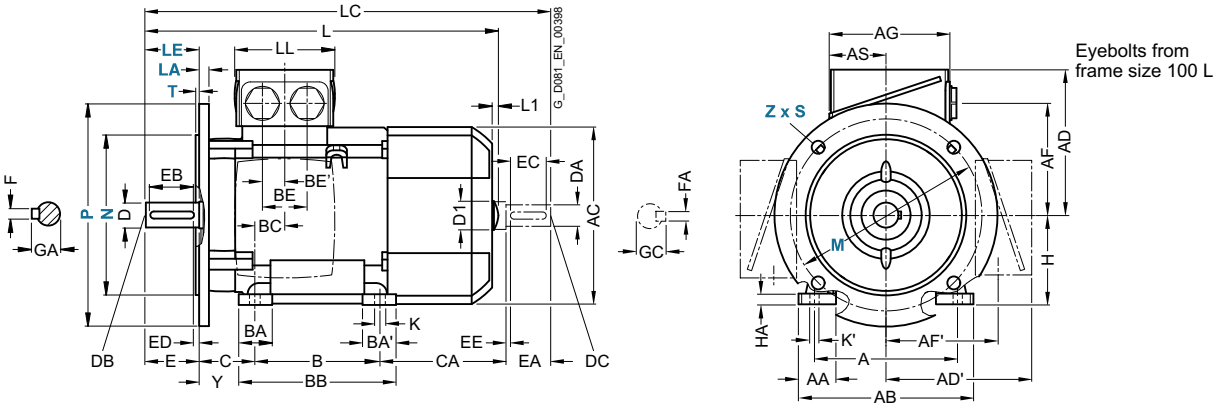

Type of construction IM B14

For flange dimensions, see Page 1/34 (**Z** = the number of retaining holes)

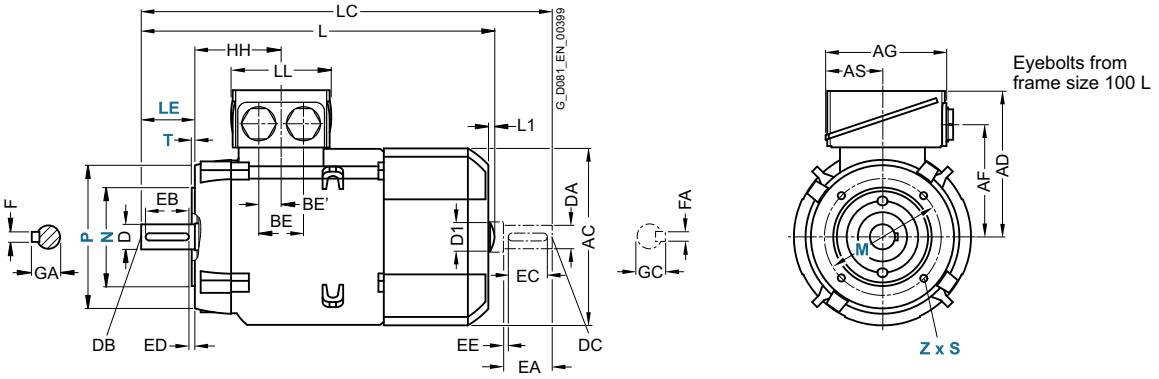

For motor			Dimension designation acc. to **IEC**								DE shaft extension							NDE shaft extension						
Frame size	Motor type 1LE100. 1LE101. 1LE1021	No. of poles	HH	K	K'	L	L1	D1	LC	LL	D	DB	E	EB	ED	F	GA	DA	DC	EA	EC	EE	FA	GC
80 M	1LE1001 1LE1041	2, 4, 6	73	9.5	13.5	292	–	–	–	79	19	M6	40	32	4	6	21.5	19	M6	40	32	4	6	21.5
90 S		2, 4, 6	78.5	10	14	347	–	–	–	79	24	M8	50	40	5	8	27	19	M6	40	32	4	6	21.5
90 L		2, 4, 6	78.5	10	14	347	–	–	–	79	24	M8	50	40	5	8	27	19	M6	40	32	4	6	21.5
100 L	All	2, 4, 6, 8	96.5	12	16	395.5 [1]	7	32	454	112	28	M10	60	50	5	8	31	24	M8	50	40	5	8	27
112 M	All	2, 4, 6, 8	96	12	16	389 [1] 414	7	32	450 475	112	28	M10	60	50	5	8	31	24	M8	50	40	5	8	27
132 S	All	2, 4, 6, 8	115.5	12	16	465 [1]	8.5	39	535.5	130	38	M12	80	70	5	10	41	28	M10	60	50	5	8	31
132 M	All	2, 4, 6, 8	115.5	12	16	465 [1]	8.5	39	535.5	130	38	M12	80	70	5	10	41	28	M10	60	50	5	8	31
160 M	All	2, 4, 6, 8	155	15	19	604 [1]	10	45	730	145	42	M16	110	90	10	12	45	42	M16	110	90	10	12	45
160 L	All	2, 4, 6, 8	155	15	19	604 [1] [2]	10	45	730 [3]	145	42	M16	110	90	10	12	45	42	M16	110	90	10	12	45
180 M	All	2, 4, 6	151	14.5	19	699	–	–	814	145	48	M16	110	100	5	14	52	48	M16	110	100	5	14	52
180 L	All	2, 4, 6	151	14.5	19	699	–	–	814	145	48	M16	110	100	5	14	52	48	M16	110	100	5	14	52
200 L	All	2, 4, 6	178	18.5	25	746	–	–	860	185	55	M20	110	100	5	16	59	55	M20	110	100	5	16	59

[1] The length is specified as far as the tip of the fan cover.

[2] Only for pole-changing types 1LE1011-1DP6 and 1LE1012-1DQ6 the dimension L is 664 mm.

[3] Only for pole-changing types 1LE1011-1DP6 and 1LE1012-1DQ6 the dimension LC is 790 mm.

© Siemens AG 2015

2

Dimensional drawings

Type of construction IM B3

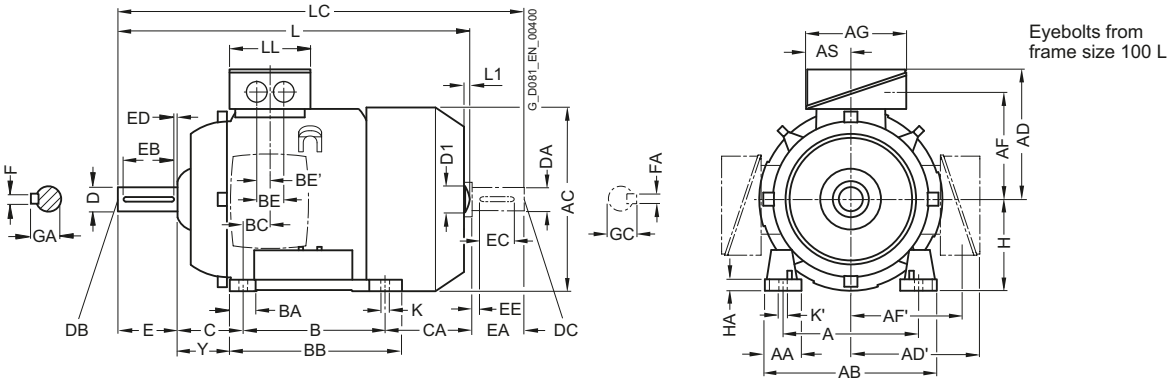

Types of construction IM B5 and IM V1

For flange dimensions, see Page 1/34 (**Z** = the number of retaining holes)

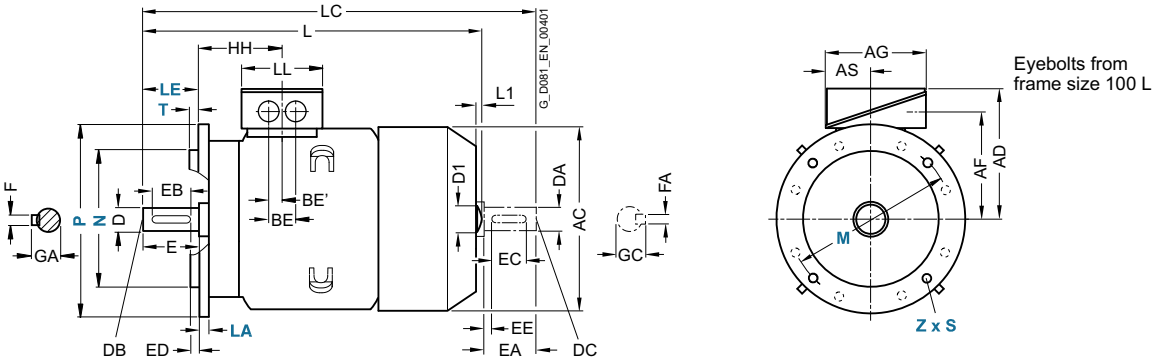

For motor			Dimension designation acc. to **IEC**																				
Frame size	Motor type 1LE1001 1LE1002	No. of poles	A	AA	AB	AC	AD	AD'	AF	AF'	AG	AS	B*	BA	BA'	BB	BC	BE	BE'	C	CA*	H	HA	Y
80 M	All	2, 4	125	30.5	150	159	121	–	96.5	–	93	43	100	32	–	118	23	–	18 [1]	50	–	80	8	41
90 L	All	2, 4	140	30.5	165	178	126	–	101.5	–	93	43	125	33	–	143	22.5	–	18 [1]	56	–	90	10	47
100 L	All	2, 4, 6, 8	160	42	196	198	166	166	125.5	125.5	135	63.5	140	37.5	–	176	33.5	50	25	63	176	100	12	45
112 M	All	2, 4, 6, 8	190	46	226	222	177	177	136.5	136.5	135	63.5	140	35.4	–	176	26	50	25	70	155	112	12	52
132 M	All	2, 4, 6, 8	216	53	256	262	202	202	159.5	159.5	155	70.5	178	38	–	218	26.5	48	24	89	178.5	132	15	69
160 L	All	2, 4, 6, 8	254	60	300	314	236.5	236.5	190	190	175	77.5	254	44	–	300	47	57	28.5	108	208	160	18	85
180 L	All	2, 4, 6, 8	279	65	339	356	259	259	212.5	212.5	175	77.5	241/ 279	80	100	328	30	57	28.5	121	–	180	20	95
200 L	All	2, 4, 6, 8	318	70	378	396	296	296	238	238	225	102.5	305	90	100	355	45	75	37.5	133	–	200	25	108

* This dimension is assigned in EN 50347 to the frame size listed.

© Siemens AG 2015

Dimensional drawings (continued)

Type of construction IM B35

For flange dimensions, see Page 1/34 (**Z** = the number of retaining holes)

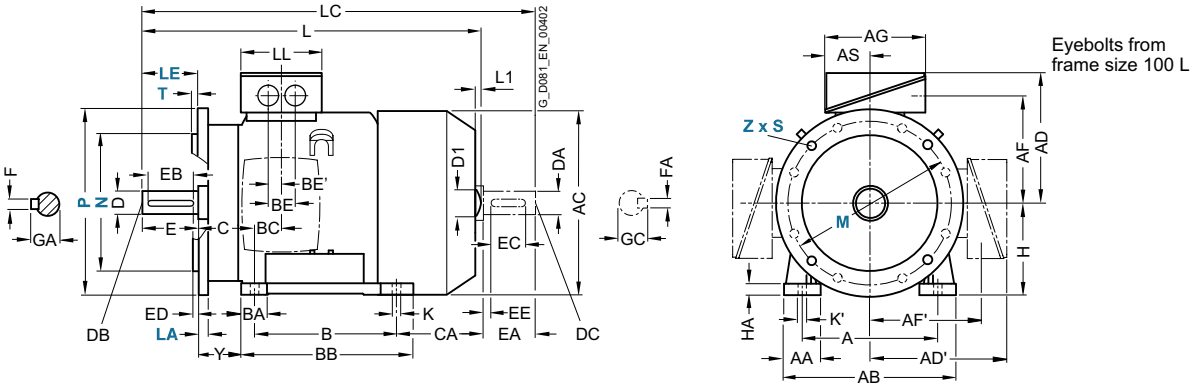

Type of construction IM B14

For flange dimensions, see Page 1/34 (**Z** = the number of retaining holes)

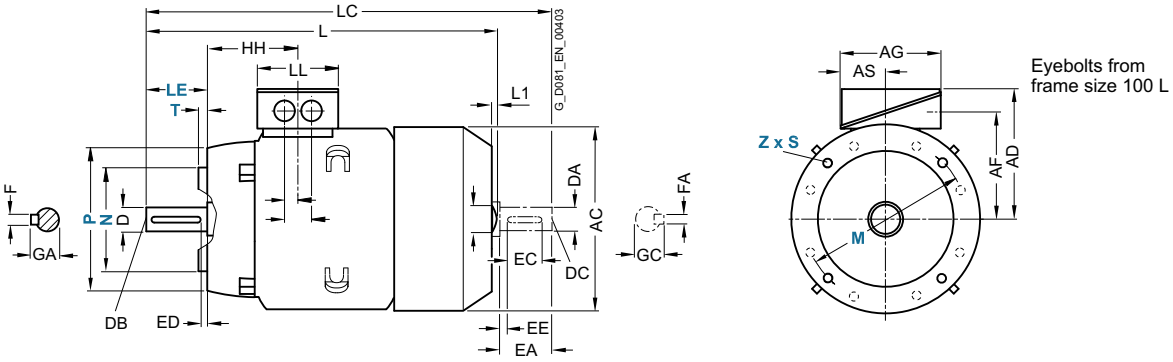

For motor			Dimension designation acc. to **IEC**								DE shaft extension							NDE shaft extension						
Frame size	Motor type 1LE1001 1LE1002	No. of poles	HH	K	K'	L [1]	L1	D1	LC	LL	D	DB	E	EB	ED	F	GA	DA	DC	EA	EC	EE	FA	GC
80 M	All	2, 4	73	9.5	13.5	292	–	–	–	79	19	M6	40	32	4	6	21.5	19	M6	40	32	4	6	21.5
90 L	All	2, 4	78.5	10	14	347	–	–	–	79	24	M8	50	40	5	8	27	19	M6	40	32	4	6	21.5
100 L	All	2, 4, 6, 8	96.5	12	16	430.5	7	32	489	112	28	M10	60	50	5	8	31	24	M8	50	40	5	8	27
112 M	All	2, 4, 6, 8	96	12	16	414	7	32	475	112	28	M10	60	50	5	8	31	24	M8	50	40	5	8	27
132 M	All	2, 4, 6, 8	115.5	12	16	515	8.5	39	585.5	130	38	M12	80	70	5	10	41	28	M10	60	50	5	8	31
160 L	All	2, 4, 6, 8	155	15	19	664	10	45	790	145	42	M16	110	90	10	12	45	42	M16	110	90	10	12	45
180 L	All	2, 4, 6	151	14.5	19	699	–	–	814	145	48	M16	110	100	5	14	52	48	M16	110	100	5	14	52
200 L	All	2, 4, 6	178	18.5	25	746	–	–	860	185	55	M20	110	100	5	16	59	55	M20	110	100	5	16	59

[1] The length is specified as far as the tip of the fan cover.

© Siemens AG 2015

Dimensional drawings

Type of construction IM B3

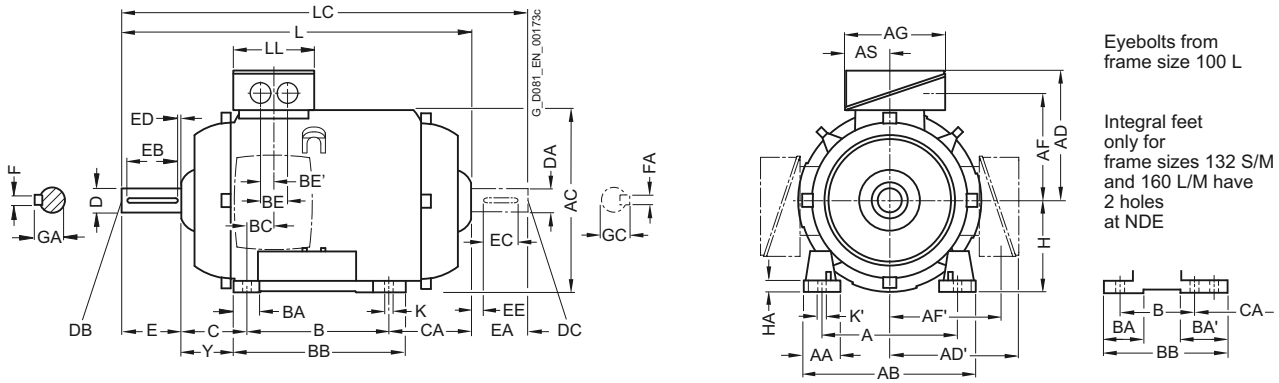

Types of construction IM B5 and IM V1

For flange dimensions, see Page 1/34 (**Z** = the number of retaining holes)

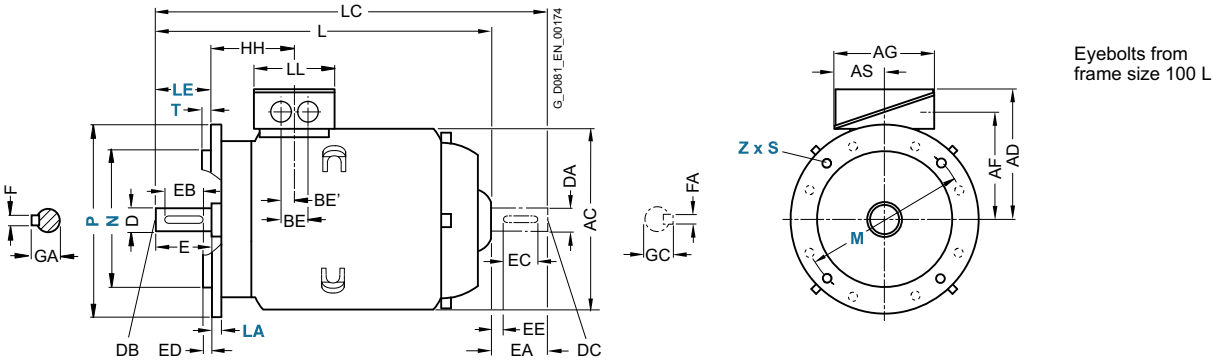

For motor			Dimension designation acc. to **IEC**																				
Frame size	Motor type 1LE100. 1PC100. 1LE1021	No. of poles	A	AA	AB	AC	AD	AD'	AF	AF'	AG	AS	B*	BA	BA'	BB	BC	BE	BE'	C	CA*	H	HA	Y
80 M	1LE1001	2, 4, 6	125	30.5	150	159	121	–	96.5	–	93	43	100	32	–	118	23	–	18	50	–	80	8	41
	1LE1021	2, 4, 6					149		112		119.5	61.5												
90 S	1LE1001	2, 4, 6	140	30.5	165	178	126	–	101.5	–	93	43	100	33	–	143	22.5	–	18	56	–	90	10	47
	1LE1021	2, 4, 6					154		117		119.5	61.5												
90 L	1LE1001	2, 4, 6	140	30.5	165	178	126	–	101.5	–	93	43	125	33	–	143	22.5	–	18	56	–	90	10	47
	1LE1021	2, 4, 6					154		117		119.5	61.5												
100 L	All	2, 4, 6, 8	160	42	196	197	166	166	125.5	125.5	135	63.5	140	37.5	–	176	33.5	50	25	63	–	100	12	45
112 M	All	2, 4 6, 8	190	46	226	221	177	177	136.5	136.5	135	63.5	140	35.4	–	176	26	50	25	70	–	112	12	52
132 S	All	2, 4, 6, 8	216	53	256	261	202	202	159.5	159.5	155	70.5	140	38	76 [1]	218 [2]	26.5	48	24	89	–	132	15	69
132 M	All	2, 4, 6, 8	216	53	256	261	202	202	159.5	159.5	155	70.5	178	38	76	218	26.5	48	24	89	–	132	15	69
160 M	All	2, 4, 6, 8	254	60	300	314	236.5	236.5	190	190	175	77.5	210	44	89 [3]	300 [4]	47	57	28.5	108	–	160	18	85
160 L	All	2, 4, 6, 8	254	60	300	314	236.5	236.5	190	190	175	77.5	254	44	89	300	47	57	28.5	108	–	160	18	85
180 M	1LE1001 1LE1021	2, 4, 6, 8	279	65	339	356	259	259	212.5	212.5	175	77.5	241/ 279	80	100	328	30	57	28.5	121	–	180	20	95
200 L	1LE1001 1LE1021	2, 4, 6, 8	318	70	378	396	296	296	238	238	225	102.5	305	90	100	355	45	75	37.5	133	–	200	25	108

* This dimension is assigned in EN 50347 to the frame size listed.

[1] With screwed-on feet, dimension BA' is 38 mm.

[2] With screwed-on feet, dimension BB is 180 mm.

[3] With screwed-on feet, dimension BA' is 44 mm.

[4] With screwed-on feet, dimension BB is 256 mm.

© Siemens AG 2015

Dimensional drawings (continued)

Type of construction IM B35

For flange dimensions, see Page 1/34 (**Z** = the number of retaining holes)

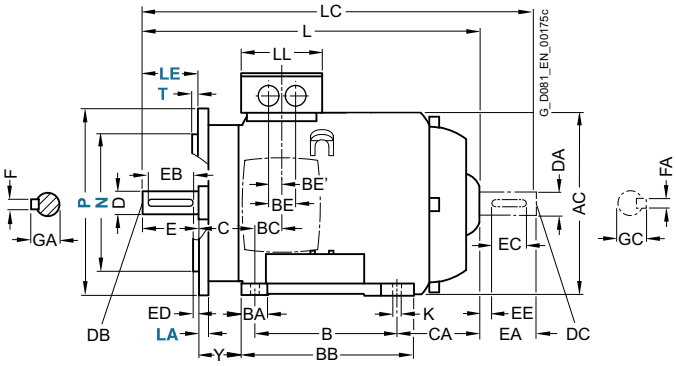

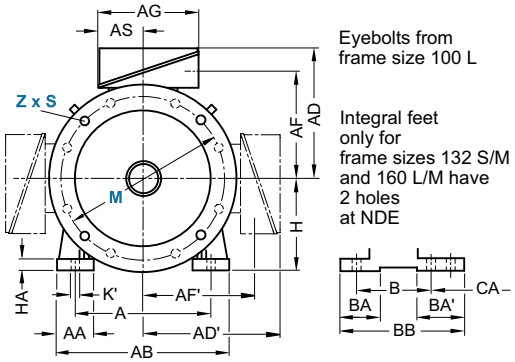

Type of construction IM B14

For flange dimensions, see Page 1/34 (**Z** = the number of retaining holes)

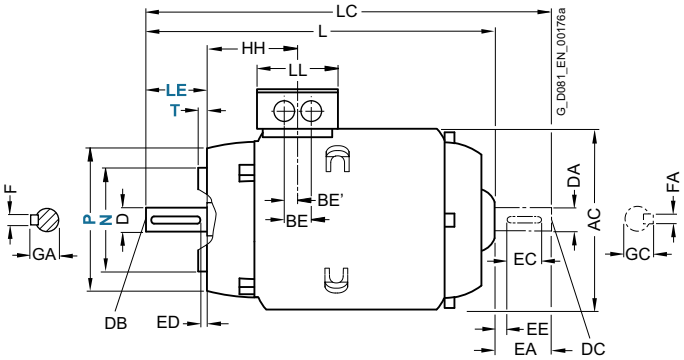

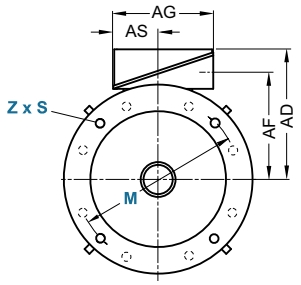

For motor			Dimension designation acc. to **IEC**						DE shaft extension							NDE shaft extension						
Frame size	Motor type 1LE100. 1PC100. 1LE1021	No. of poles	HH	K	K'	L	LC	LL	D	DB	E	EB	ED	F	GA	DA	DC	EA	EC	EE	FA	GC
80 M	1LE1001	2, 4, 6	73	9.5	13.5	253	–	79	19	M6	40	32	4	6	21.5	–	–	–	–	–	–	–
	1LE1021	2, 4, 6						123														
90 S	1LE1021	2, 4, 6	78.5	10	14	295	–	79	24	M8	50	40	5	8	27	–	–	–	–	–	–	–
	1LE1021	2, 4, 6						123														
90 L	1LE1021	2, 4, 6	78.5	10	14	295	–	123	24	M8	50	40	5	8	27	–	–	–	–	–	–	–
	1LE1021	2, 4, 6						123														
100 L	All	2, 4, 6, 8	96.5	12	16	321.5	–	112	28	M10	60	50	5	8	31	–	–	–	–	–	–	–
112 M	All	2, 4 6, 8	96	12	16	311 336	–	112	28	M10	60	50	5	8	31	–	–	–	–	–	–	–
132 S	All	2, 4, 6, 8	115.5	12	16	380.5	–	130	38	M12	80	70	5	10	41	–	–	–	–	–	–	–
132 M	All	2, 4, 6, 8	115.5	12	16	380.5	–	130	38	M12	80	70	5	10	41	–	–	–	–	–	–	–
160 M	All	2, 4, 6, 8	155	15	19	510	–	145	42	M16	110	90	10	12	45	–	–	–	–	–	–	–
160 L	All	2, 4, 6, 8	155	15	19	510	–	145	42	M16	110	90	10	12	45	–	–	–	–	–	–	–
180 M	1LE1001 1LE1021	2, 4, 6, 8	151	14.5	19	592	706	145	48	M16	110	100	5	14	52	–	–	–	–	–	–	–
200 L	1LE1001 1LE1021	2, 4, 6, 8	178	18.5	25	642	759	185	55	M20	110	100	5	16	59	–	–	–	–	–	–	–

© Siemens AG 2015

2

Dimensional drawings

Type of construction IM B3

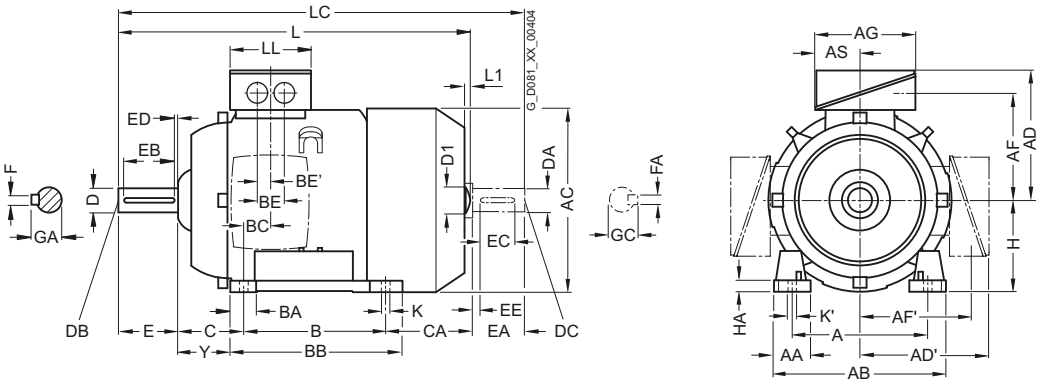

Types of construction IM B5 and IM V1

For flange dimensions, see Page 1/34 (**Z** = the number of retaining holes)

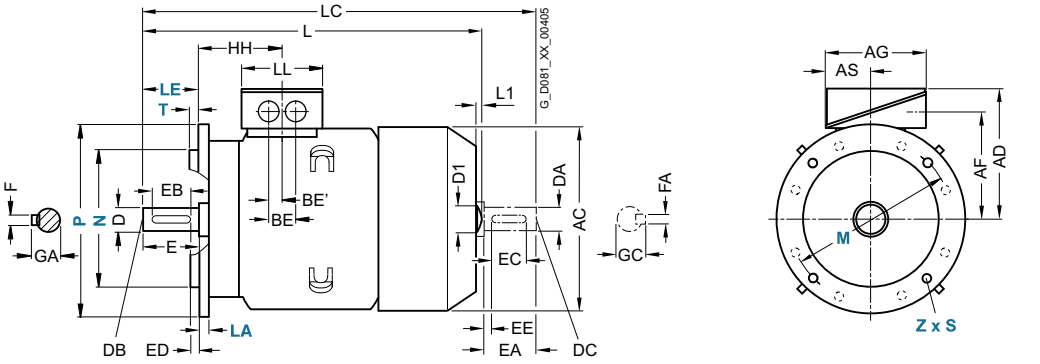

For motor			Dimension designation acc. to **IEC**																			
Frame size	Motor type	No. of poles	A	AA	AB	AC	AD	AD'	AF	AF'	AG	AS	B*	BA	BB	BC	BE	BE'	C	CA*	H	HA	Y
80 M	1LE1003-0DA2, -0DB2, -0DC2 -0DA3, -0DB3, -0DC3	2, 4, 6	125	30.5	150	159	121	–	96.5	–	93	43	100	32	118	23	–	18	50	–	80	8	41
	1LE1023-0DA2, -0DB2, -0DC2 -0DA3, -0DB3, -0DC3	2, 4, 6					149		112		119.5	61.5											
90 S	1LE1003-0EA0, -0EB0, -0EC0	2, 4, 6	140	30.5	165	178	126	–	101.5	–	93	43	100	33	143	22.5	–	18	56	–	90	10	47
	1LE1023-0EA0, -0EB0, -0EC0	2, 4, 6					154		117		119.5	61.5											
90 L	1LE1003-0EA4, -0EB4, -0EC4	2, 4, 6	140	30.5	165	178	126	–	101.5	–	93	43	100	33	143	22.5	–	18	56	–	90	10	47
	1LE1023-0EA4, -0EB4, -0EC4	2, 4, 6					154		117		119.5	61.5											

* This dimension is assigned in EN 50347 to the frame size listed.

© Siemens AG 2015

Dimensional drawings (continued)

Type of construction IM B35

For flange dimensions, see Page 1/34 (**Z** = the number of retaining holes)

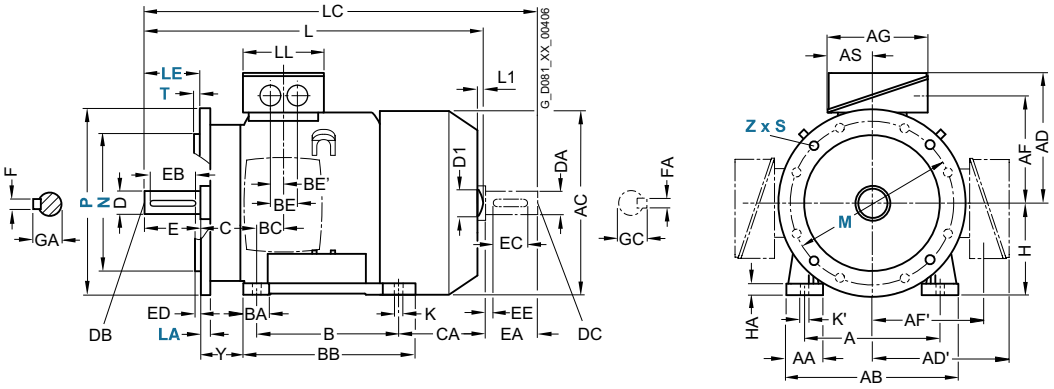

Type of construction IM B14

For flange dimensions, see Page 1/34 (**Z** = the number of retaining holes)

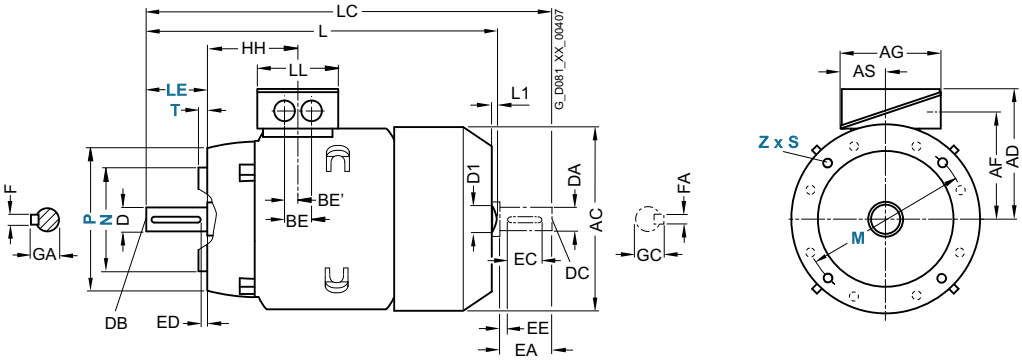

For motor			Dimension designation acc. to **IEC**								DE shaft extension							NDE shaft extension						
Frame size	Motor type	No. of poles	HH	K	K'	L [1]	L1	D1	LC	LL	D	DB	E	EB	ED	F	GA	DA	DC	EA	EC	EE	FA	GC
80 M	1LE1003-0DA2, -0DB2, -0DC2, -0DA3, -0DB3, -0DC3	2, 4, 6	73	9.5	13.5	292	–	–	–	79	19	M6	40	32	4	6	21.5	19	M6	40	32	4	6	21.5
						327																		
	1LE1023-0DA2, -0DB2, -0DC2, -0DA3, -0DB3, -0DC3	2, 4, 6								123														
90 S	1LE1003-0EA0, -0EB0, -0EC0	2, 4, 6	78.5	10	14	347	–	–	–	79	24	M8	50	40	5	8	27	19	M6	40	32	4	6	21.5
	1LE1023-0EA0, -0EB0, -0EC0	2, 4, 6								123														
90 L	1LE1003-0EA4, -0EB4, -0EC4	2, 4, 6	78.5	10	14	387	–	–	–	79	24	M8	50	40	5	8	27	19	M6	40	32	4	6	21.5
	1LE1023-0EA4, -0EB4, -0EC4	2, 4, 6								123														

[1] The length is specified as far as the tip of the fan cover.

© Siemens AG 2015

Dimensional drawings

Type of construction IM B3

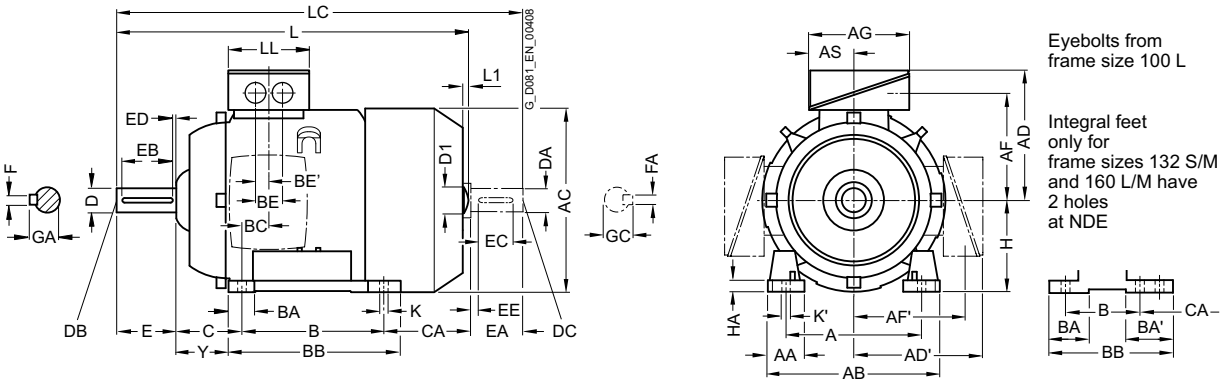

Types of construction IM B5 and IM V1

For flange dimensions, see Page 1/34 (**Z** = the number of retaining holes)

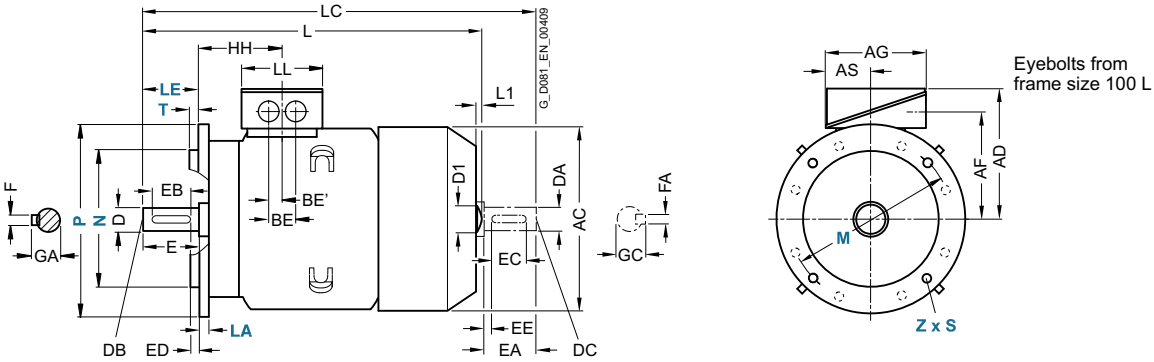

For motor			Dimension designation acc. to **IEC**																					
Frame size	Motor type 1LE1003-1LE1023-	No. of poles	A	AA	AB	AC	AD	AD'	AF	AF'	AG	AS	B*	BA	BA'	BB	BC	BE	BE'	C	CA*	H	HA	Y
100 L	1AA4, 1AB4, 1AB5, 1AC3	2, 4, 6	160	42	196	198	166	166	125.5	125.5	135	63.5	140	37.5	–	176	33.5	50	25	63	176	100	12	45
112 M	1BA2, 1BB2	2, 4, 6	190	46	226	222	177	177	136.5	136.5	135	63.5	140	35.4	–	176	26	50	25	70	155	112	12	52
132 S	1CA0, 1CC0	2, 6	216	53	256	262	202	202	159.5	159.5	155	70.5	140	38	76 [1]	218 [2]	26.5	48	24	89	128.5 [3]	132	15	69
	1CA1, 1CB0	2, 4													–						178.5			
132 M	1CC2	6	216	53	256	262	202	202	159.5	159.5	155	70.5	178	38	76	218	26.5	48	24	89	128.5 [3]	132	15	69
	1CB2, 1CC3	4, 6, 8													–						178.5			
160 M	1DA2, 1DA3, 1DB2, 1DC2	2, 4, 6	254	60	300	314	236.5	236.5	190	190	175	77.5	210	44	89 [4]	300 [5]	47	57	28.5	108	148 [6]	160	18	85
160 L	1DA4, 1DB4, 1DC4	2, 4, 6	254	60	300	314	236.5	236.5	190	190	175	77.5	254	44	–	300	47	57	28.5	108	208	160	18	85
180 M	1EA2 1EB2, 1EB4, 1EC4	2, 4, 6	279	65	339	356	259	259	212.5	212.5	175	77.5	241/ 279	80	100	328	30	57	28.5	121	–	180	20	95
200 L	2AA4, 2AA5, 2AB5, 2AC4, 2AC5	2, 4, 6	318	70	378	396	296	296	238	238	225	102.5	305	90	100	355	45	75	37.5	133	–	200	25	108

* This dimension is assigned in EN 50347 to the frame size listed.

1) With screwed-on feet, dimension BA' is 38 mm.

2) With screwed-on feet, dimension BB is 180 mm.

3) With screwed-on feet, dimension CA is 166.5 mm.

4) With screwed-on feet, dimension BA' is 44 mm.

5) With screwed-on feet, dimension BB is 256 mm.

6) With screwed-on feet, dimension CA is 192 mm.

© Siemens AG 2015

Dimensional drawings (continued)

Type of construction IM B35

For flange dimensions, see Page 1/34 (**Z** = the number of retaining holes)

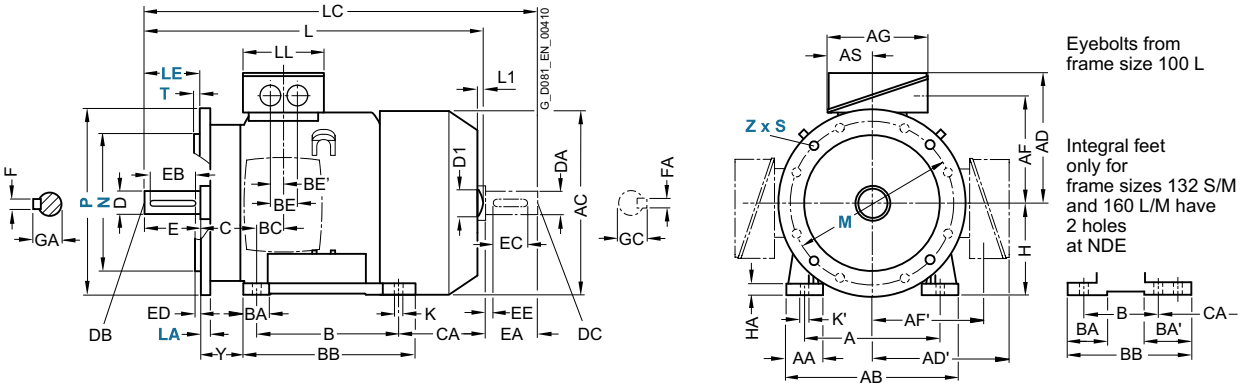

Type of construction IM B14

For flange dimensions, see Page 1/34 (**Z** = the number of retaining holes)

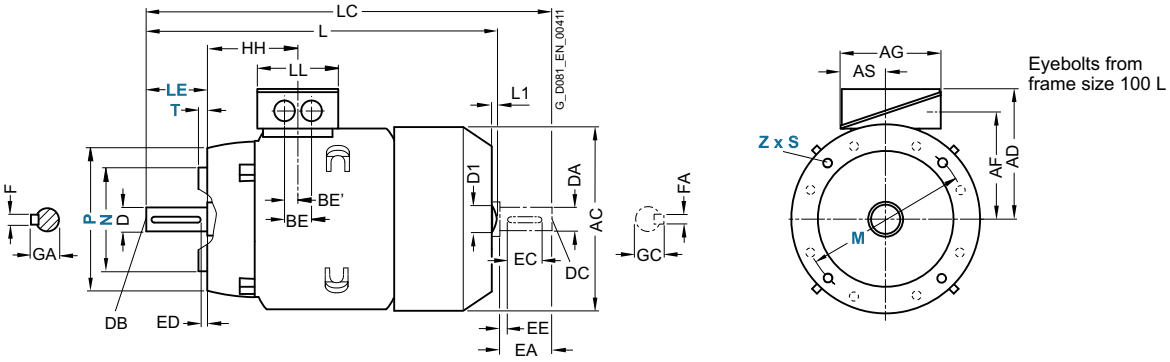

For motor			Dimension designation acc. to **IEC**								DE shaft extension							NDE shaft extension						
Frame size	Motor type 1LE1003- 1LE1023-	No. of poles	HH	K	K'	L [1]	L1	D1	LC	LL	D	DB	E	EB	ED	F	GA	DA	DC	EA	EC	EE	FA	GC
100 L	1AA4, 1AB4, 1AB5, 1AC3	2, 4, 6	96.5	12	16	430.5	7	32	489	112	28	M10	60	50	5	8	31	24	M8	50	40	5	8	27
112 M	1BA2, 1BB2	2, 4, 6	96	12	16	414	7	32	475	112	28	M10	60	50	5	8	31	24	M8	50	40	5	8	27
132 S	1CA0, 1CC0	2, 6	115.5	12	16	465	8.5	39	535.5	130	38	M12	80	70	5	10	41	28	M10	60	50	5	8	31
	1CA1, 1CB0	2, 4				515			585.5															
132 M	1CC2	6	115.5	12	16	465	8.5	39	535.5	130	38	M12	80	70	5	10	41	28	M10	60	50	5	8	31
	1CB2, 1CC3	4, 6				515			585.5															
160 M	1DA2, 1DA3, 1DB2, 1DC2	2, 4, 6	155	15	19	604	10	45	730	145	42	M16	110	90	10	12	45	42	M16	110	90	10	12	45
160 L	1DA4, 1DB4, 1DC4	2, 4, 6	155	15	19	664	10	45	790	145	42	M16	110	90	10	12	45	42	M16	110	90	10	12	45
180 M	1EA2 1EB2, 1EB4, 1EC4	2, 4, 6	151	14.5	19	699	–	–	814	145	48	M16	110	100	5	14	52	48	M16	110	100	5	14	52
200 L	2AA4, 2AA5, 2AB5, 2AC4, 2AC5	2, 4, 6	178	18.5	25	746	–	–	860	185	55	M20	110	100	5	16	59	55	M20	110	100	5	16	59

[1] The length is specified as far as the tip of the fan cover.

© Siemens AG 2015

Dimensional drawings

Type of construction IM B3

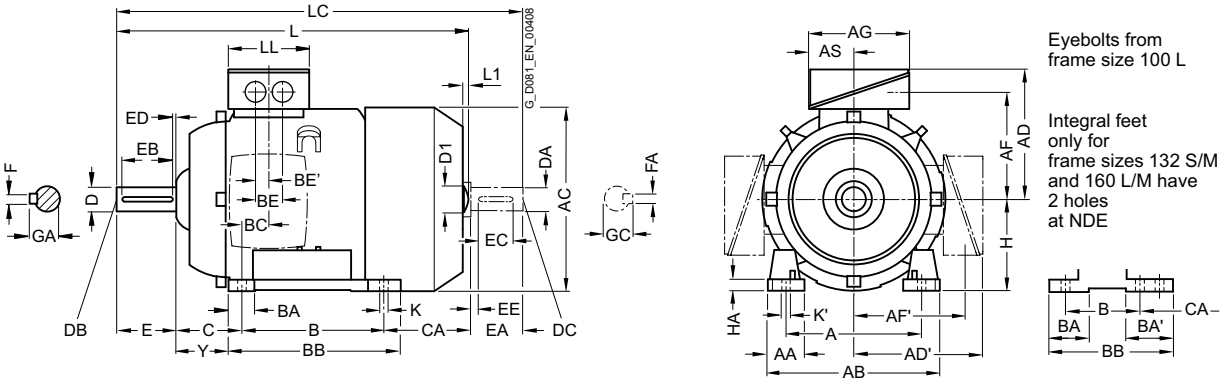

Types of construction IM B5 and IM V1

For flange dimensions, see Page 1/34 (**Z** = the number of retaining holes)

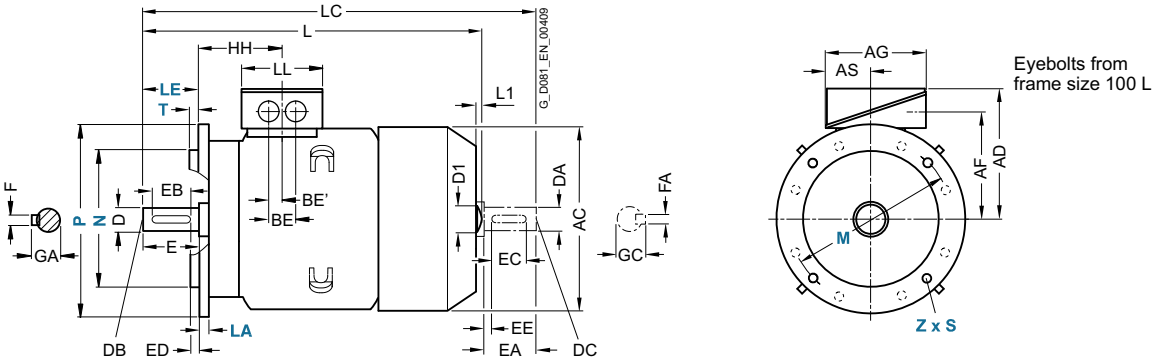

For motor			Dimension designation acc. to **IEC**																				
Frame size	Motor type 1LE1003	No. of poles	A	AA	AB	AC	AD	AD'	AF	AF'	AG	AS	B*	BA	BA'	BB	BC	BE	BE'	C	CA*	H	HA	Y
132 M	All	2, 4	216	53	256	262	202	202	159.5	159.5	155	70.5	178	38	76	218	26.5	48	24	89	128.5	132	15	69
160 L	All	2, 4	254	60	300	314	236.5	236.5	190	190	175	77.5	254	44	–	300	47	57	28.5	108	208	160	18	85
180 M	All	2, 4, 6	279	65	339	356	259	259	212.5	212.5	175	77.5	241/ 279	80	100	328	30	57	28.5	121	–	180	20	95
200 L	All	2, 4, 6	318	70	378	396	296	296	238	238	225	102.5	305	90	100	355	45	75	37.5	133	–	200	25	108

* This dimension is assigned in EN 50347 to the frame size listed.

© Siemens AG 2015

Dimensional drawings (continued)

Type of construction IM B35

For flange dimensions, see Page 1/34 (**Z** = the number of retaining holes)

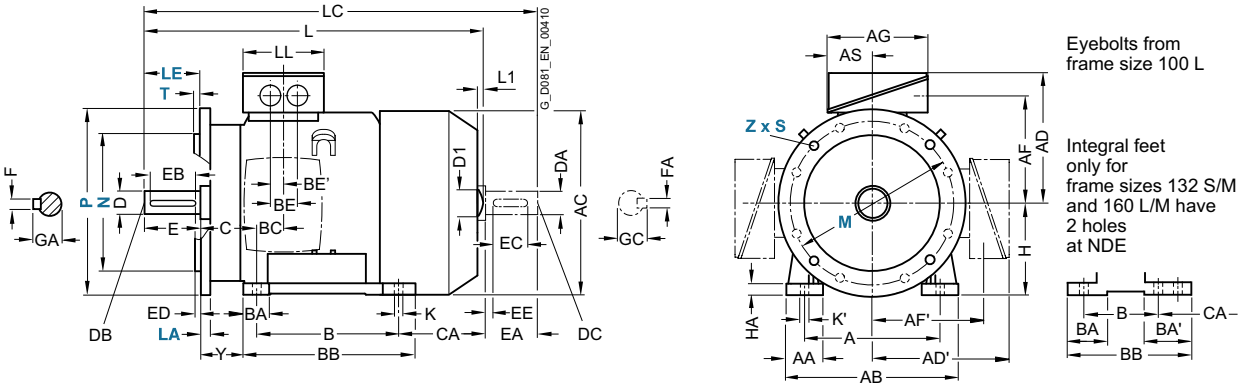

Type of construction IM B14

For flange dimensions, see Page 1/34 (**Z** = the number of retaining holes)

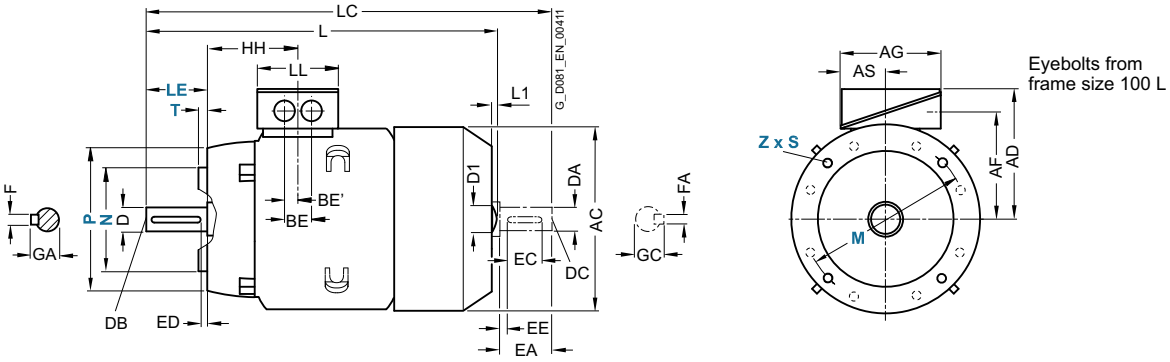

For motor			Dimension designation acc. to **IEC**								DE shaft extension							NDE shaft extension						
Frame size	Motor type 1LE1003	No. of poles	HH	K	K'	L [1]	L1	D1	LC	LL	D	DB	E	EB	ED	F	GA	DA	DC	EA	EC	EE	FA	GC
132 M	All	2, 4	115.5	12	16	465	8.5	39	535.5	130	38	M12	80	70	5	10	41	28	M10	60	50	5	8	31
160 L	All	2, 4	155	15	19	664	10	45	790	145	42	M16	110	90	10	12	45	42	M16	110	90	10	12	45
180 M	All	2, 4, 6	151	14.5	19	699	–	–	814	145	48	M16	110	100	5	14	52	48	M16	110	100	5	14	52
200 L	All	2, 4, 6	178	18.5	25	746	–	–	860	185	55	M20	110	100	5	16	59	55	M20	110	100	5	16	59

[1] The length is specified as far as the tip of the fan cover.

© Siemens AG 2015

2

Dimensional drawings

Type of construction IM B3

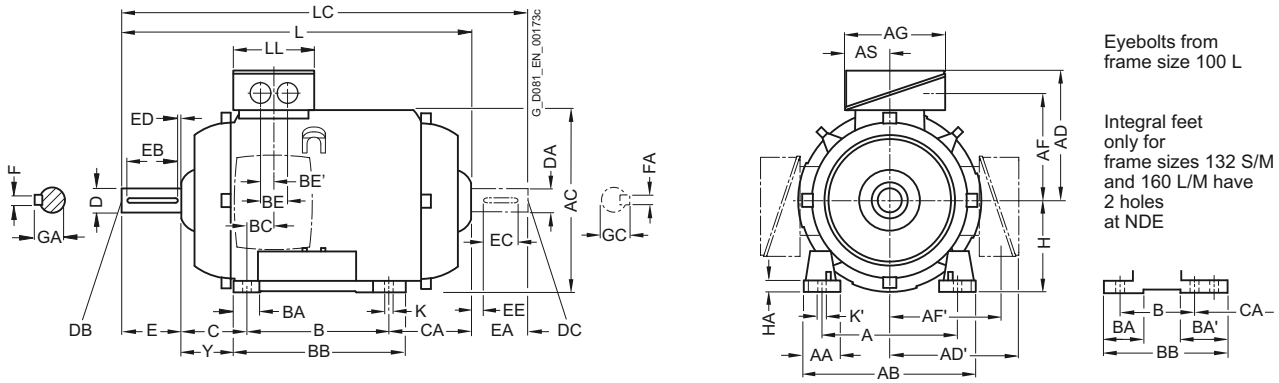

Types of construction IM B5 and IM V1

For flange dimensions, see Page 1/34 (**Z** = the number of retaining holes)

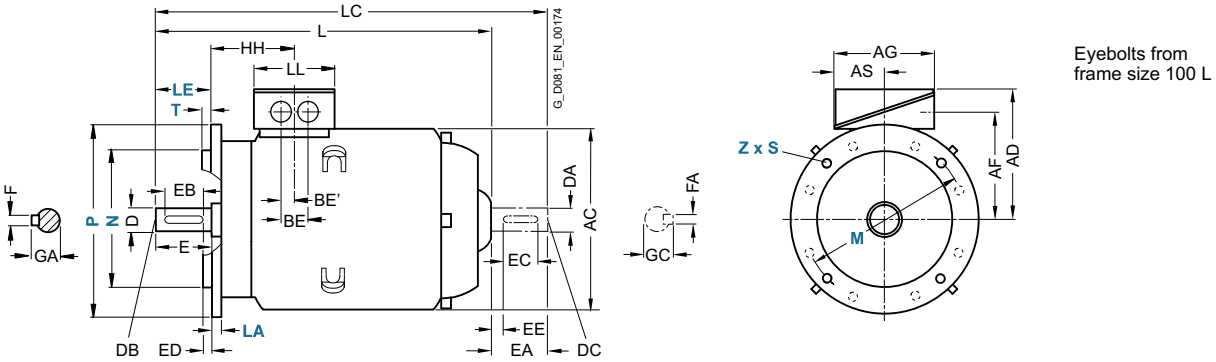

For motor			Dimension designation acc. to **IEC**																				
Frame size	Motor type 1LE1023-1LE1043-	No. of poles	A	AA	AB	AC	AD	AD'	AF	AF'	AG	AS	B*	BA	BA'	BB	BC	BE	BE'	C	CA*	H	HA	Y
80 M	0DA2, 0DB2, 0DC2	2, 4, 6	125	30.5	150	159	121	–	96.5	–	93	43	100	32	–	118	23	–	18	50	–	80	8	41
	0DA3, 0DB3, 0DC3	2, 4, 6																						
90 S	0EA0, 0EB0, 0EC0	2, 4, 6	140	30.5	165	178	126	–	101.5	–	93	43	100	33	–	143	22.5	–	18	56	–	90	10	47
90 L	0EA4, 0EB4, 0EC4	2, 4, 6	140	30.5	165	178	126	–	101.5	–	93	43	100	33	–	143	22.5	–	18	56	–	90	10	47

* This dimension is assigned in EN 50347 to the frame size listed.

© Siemens AG 2015

Dimensional drawings (continued)

Type of construction IM B35

For flange dimensions, see Page 1/34 (**Z** = the number of retaining holes)

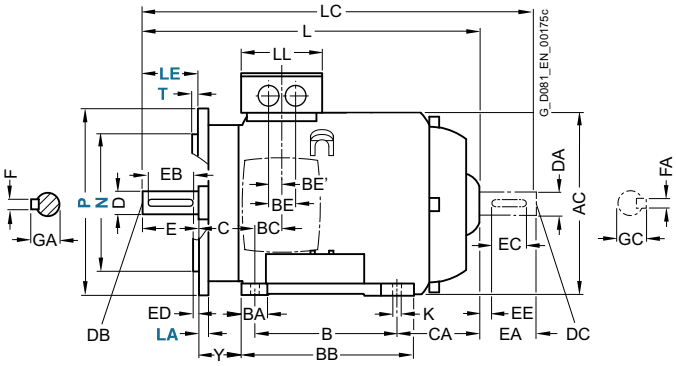

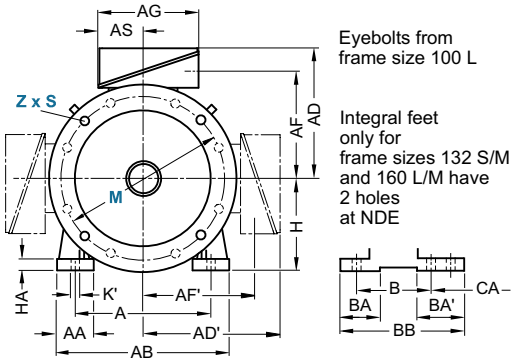

Eyebolts from frame size 100 L

Integral feet only for frame sizes 132 S/M and 160 L/M have 2 holes at NDE

Type of construction IM B14

For flange dimensions, see Page 1/34 (**Z** = the number of retaining holes)

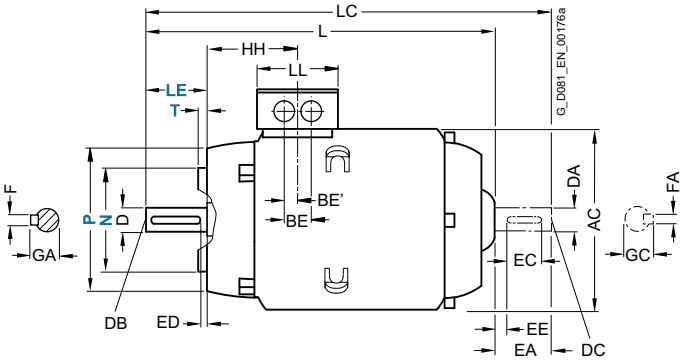

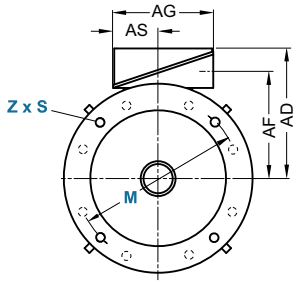

Eyebolts from frame size 100 L

For motor			Dimension designation acc. to **IEC**						DE shaft extension				NDE shaft extension									
Frame size	Motor type 1LE1023-1LE1043-	No. of poles	HH	K	K'	L [1]	LC	LL	D	DB	E	EB	ED	F	GA	DA	DC	EA	EC	EE	FA	GC
80 M	0DA2, 0DB2, 0DC2	2, 4, 6	73	9.5	13.5	292	–	79	19	M6	40	32	–	–	–	–	–	–	–	–	–	–
	0DA3, 0DB3, 0DC3	2, 4, 6				327																
90 S	0EA0, 0EB0, 0EC0	2, 4, 6	78.5	10	14	347	–	79	19	M6	40	32	–	–	–	–	–	–	–	–	–	–
90 L	0EA4, 0EB4, 0EC4	2, 4, 6	78.5	10	14	387	–	79	19	M6	40	32	–	–	–	–	–	–	–	–	–	–

[1] The length is specified as far as the tip of the fan cover.

© Siemens AG 2015

2

Dimensional drawings

Type of construction IM B3

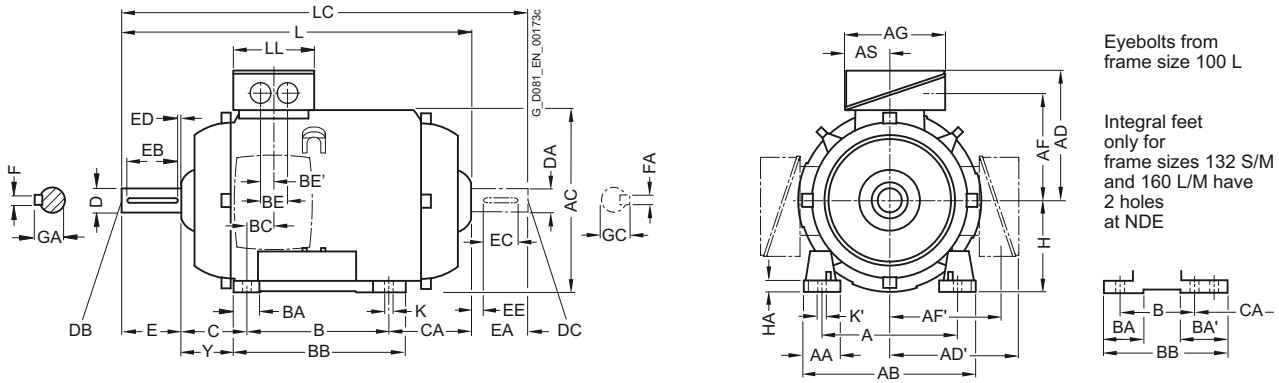

Types of construction IM B5 and IM V1

For flange dimensions, see Page 1/34 (**Z** = the number of retaining holes)

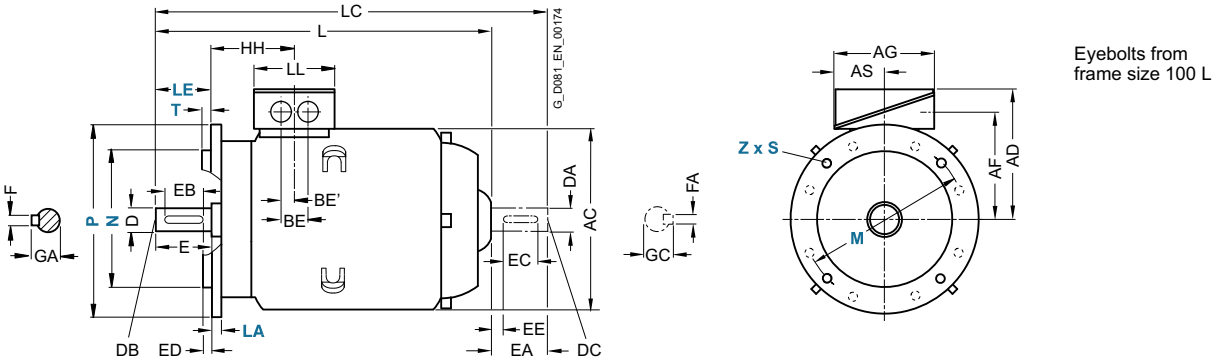

For motor			Dimension designation acc. to **IEC**																					
Frame size	Motor type 1LE1023- 1LE1043-	No. of poles	A	AA	AB	AC	AD	AD'	AF	AF'	AG	AQ	AS	B*	BA	BA'	BB	BC	BE	BE'	C	CA*	H	HA	Y
100 L	1AA4, 1AB4, 1AB5 1AC3	2, 4 6	160	42	196	198	166	166	125.5	125.5	135	195	63.5	140	37.5	–	176	33.5	50	25	63	–	100	12	45
112 M	1BA2, 1BB2	2, 4	190	46	226	222	177	177	136.5	136.5	135	195	63.5	140	35.4	–	176	26	50	25	70	–	112	12	52
132 S	1CA0, 1CC0 1CA1, 1CB0	2, 6 2, 4	216	53	256	262	202	202	159.5	159.5	155	260	70.5	140	38	76 [1] –	218 [2]	26.5	48	24	89	–	132	15	69
132 M	1CC2 1CB2, 1CC3	6 4, 6, 8	216	53	256	262	202	202	159.5	159.5	155	260	70.5	178	38	76 –	218	26.5	48	24	89	–	132	15	69
160 M	1DA2, 1DA3, 1DB2, 1DC2	2, 4, 6	254	60	300	314	236.5	236.5	190	190	175	260	77.5	210	44	89 [3]	300 [4]	47	57	28.5	108	–	160	18	85
160 L	1DA4, 1DB4, 1DC4	2, 4, 6	254	60	300	314	236.5	236.5	190	190	175	260	77.5	254	44	–	300	47	57	28.5	108	–	160	18	85
180 M	1EA2, 1EB2, 1EB4, 1EC4	2, 4, 6	279	65	339	356	259	259	212.5	212.5	175		77.5	241/ 279	80	100	328	30	57	28.5	121	–	180	20	95
200 L	2AA4, 2AA5, 2AB5, 2AC4, 2AC5	2, 4, 6	318	70	378	396	296	296	238	238	225		102.5	305	90	100	355	45	75	37.5	133	–	200	25	108

* This dimension is assigned in EN 50347 to the frame size listed.

[1] With screwed-on feet, dimension BA' is 38 mm.

[2] With screwed-on feet, dimension BB is 180 mm.

[3] With screwed-on feet, dimension BA' is 44 mm.

[4] With screwed-on feet, dimension BB is 256 mm.

© Siemens AG 2015

Dimensional drawings (continued)

Type of construction IM B35

For flange dimensions, see Page 1/34 (**Z** = the number of retaining holes)

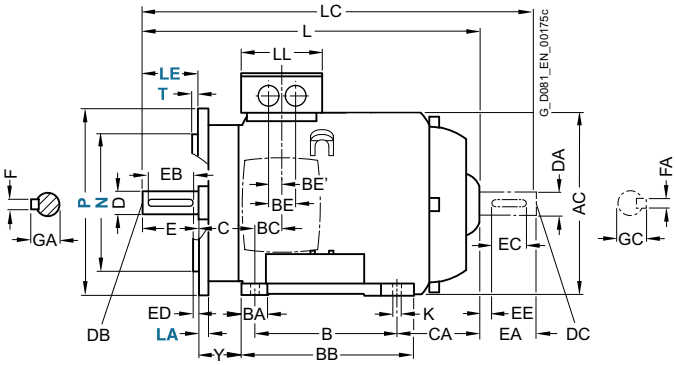

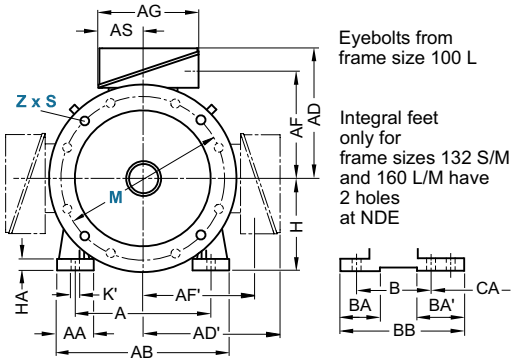

Eyebolts from frame size 100 L

Integral feet only for frame sizes 132 S/M and 160 L/M have 2 holes at NDE

Type of construction IM B14

For flange dimensions, see Page 1/34 (**Z** = the number of retaining holes)

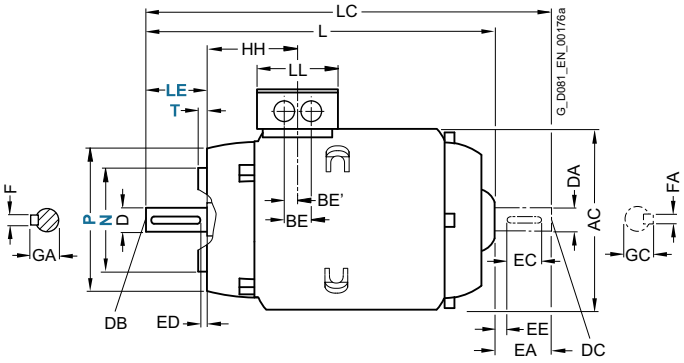

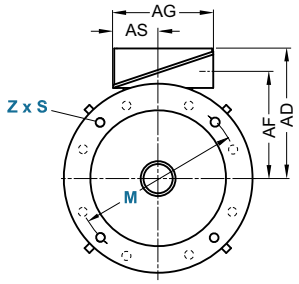

Eyebolts from frame size 100 L

For motor			Dimension designation acc. to **IEC**						DE shaft extension							NDE shaft extension						
Frame size	Motor type 1LE1023- 1LE1043-	No. of poles	HH	K	K'	L [1]	LC	LL	D	DB	E	EB	ED	F	GA	DA	DC	EA	EC	EE	FA	GC
100 L	1AA4, 1AB4, 1AB5	2, 4	96.5	12	16	356.5	–	112	28	M10	60	50	5	8	31	–	–	–	–	–	–	–
	1AC3					430.5																
112 M	1BA2, 1BB2	2, 4	96	12	16	336	–	112	28	M10	60	50	5	8	31	–	–	–	–	–	–	–
132 S	1CA0, 1CC0	2, 6	115.5	12	16	380.5	–	130	38	M12	80	70	5	10	41	–	–	–	–	–	–	–
	1CA1, 1CB0	2, 4				430.5	–									–	–	–	–	–	–	–
132 M	1CC2	6	115.5	12	16	380.5	–	130	38	M12	80	70	5	10	41	–	–	–	–	–	–	–
	1CB2, 1CC3	4, 6				430.5	–									–	–	–	–	–	–	–
160 M	1DA2, 1DA3, 1DB2, 1DC2	2, 4, 6	155	15	19	510	–	145	42	M16	110	90	10	12	45	–	–	–	–	–	–	–
160 L	1DA4, 1DB4, 1DC4	2, 4, 6	155	15	19	570	–	145	42	M16	110	90	10	12	45	–	–	–	–	–	–	–
180 M	1EA2, 1EB2, 1EB4, 1EC4		151	14.5	19	592	706	145	48	M16	110	100	5	14	52	–	–	–	–	–	–	–
200 L	2AA4, 2AA5, 2AB5, 2AC4, 2AC5		178	18.5	25	642	759	185	55	M20	110	100	5	16	59	–	–	–	–	–	–	–

[1] The length is specified as far as the tip of the fan cover.

© Siemens AG 2015

Dimensional drawings

Type of construction IM B3

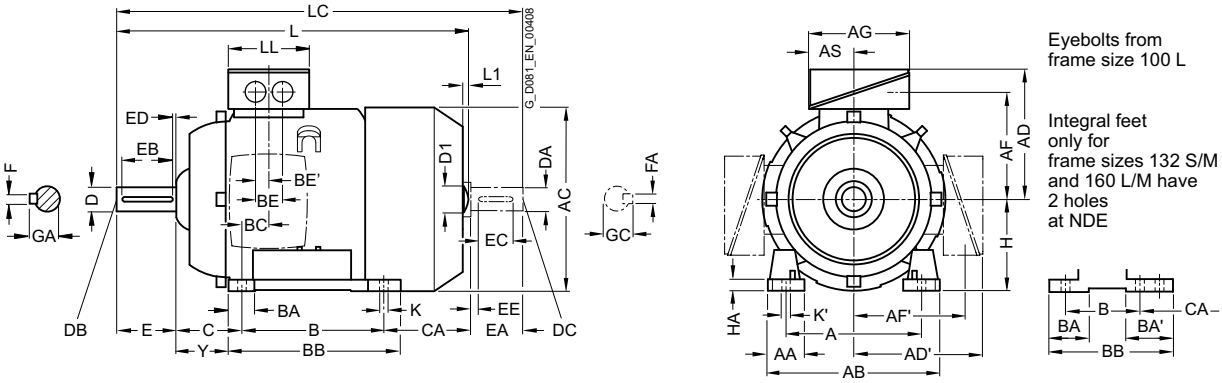

Types of construction IM B5 and IM V1

For flange dimensions, see Page 1/34 (**Z** = the number of retaining holes)

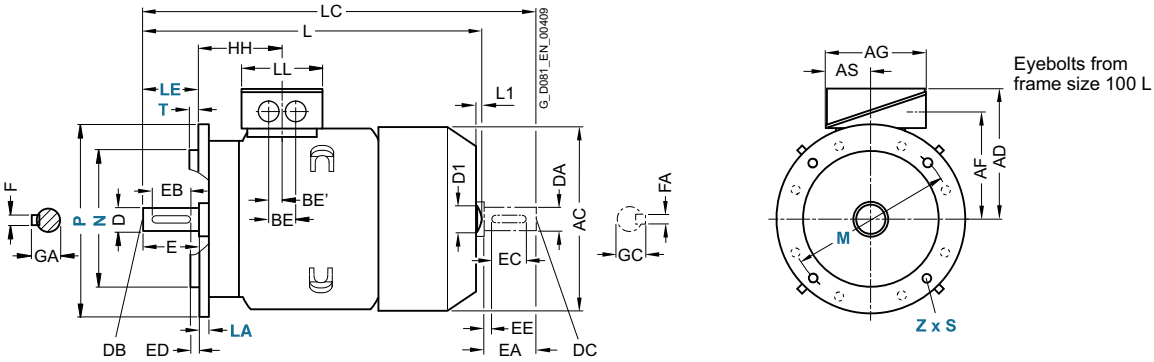

For motor			Dimension designation acc. to **IEC**																				
Frame size	Motor type 1LE1004-	No. of poles	A	AA	AB	AC	AD	AD'	AF	AF'	AG	AS	B*	BA	BA'	BB	BC	BE	BE'	C	CA*	H	HA	Y
100 L	1AA4 1AB4 1AB5	2 4 4	160	42	196	198	166	166	125.5	125.5	135	63.5	140	37.5	–	176	33.5	50	25	63	176	100	12	45
112 M	1BA2 1BB2	2 4	190	46	226	222	177	177	136.5	136.5	135	63.5	140	35.4	–	176	26	50	25	70	155	112	12	52
132 S	1CA0 1CA1 1CB0	2 2 4	216	53	256	262	202	202	159.5	159.5	155	70.5	140	38	76 [1] –	218 [2]	26.5	48	24	89	128.5 [3] 178.5	132	15	69
132 M	1CB2	4	216	53	256	262	202	202	159.5	159.5	155	70.5	178	38	–	218	26.5	48	24	89	178.5	132	15	69
160 M	1DA2 1DA3 1DB2	2 2 4	254	60	300	314	236.5	236.5	190	190	175	77.5	210	44	89 [4]	300 [5]	47	57	28.5	108	148 [6]	160	18	85
160 L	1DA4 1DB4	2 4	254	60	300	314	236.5	236.5	190	190	175	77.5	254	44	–	300	47	57	28.5	108	208	160	18	85

* This dimension is assigned in EN 50347 to the frame size listed.

1) With screwed-on feet, dimension BA' is 38 mm.

2) With screwed-on feet, dimension BB is 180 mm.

3) With screwed-on feet, dimension CA is 166.5 mm.

4) With screwed-on feet, dimension BA' is 44 mm.

5) With screwed-on feet, dimension BB is 256 mm.

6) With screwed-on feet, dimension CA is 192 mm.

© Siemens AG 2015

Dimensional drawings (continued)

Type of construction IM B35

For flange dimensions, see Page 1/34 (**Z** = the number of retaining holes)

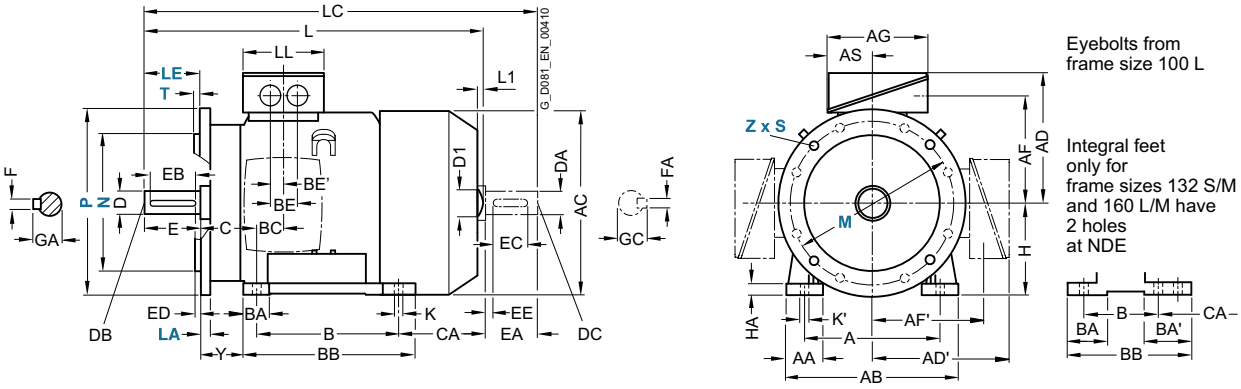

Type of construction IM B14

For flange dimensions, see Page 1/34 (**Z** = the number of retaining holes)

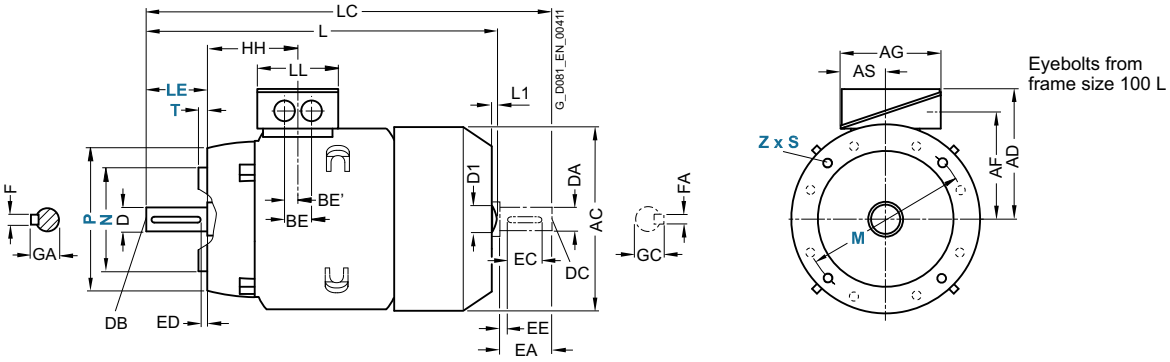

For motor			Dimension designation acc. to **IEC**								DE shaft extension							NDE shaft extension						
Frame size	Motor type 1LE1004-	No. of poles	HH	K	K'	L [1]	L1	D1	LC	LL	D	DB	E	EB	ED	F	GA	DA	DC	EA	EC	EE	FA	GC
100 L	1AA4 1AB4 1AB5	2 4 4	96.5	12	16	430.5 482	7	32	489	112	28	M10	60	50	5	8	31	24	M8	50	40	5	8	27
112 M	1BA2 1BB2	2 4	96	12	16	414 472	7	32	475	112	28	M10	60	50	5	8	31	24	M8	50	40	5	8	27
132 S	1CA0 1CA1 1CB0	2 2 4	115.5	12	16	465 515	8.5	39	535.5 585.5	130	38	M12	80	70	5	10	41	28	M10	60	50	5	8	31
132 M	1CB2	4	115.5	12	16	515	8.5	39	585.5	130	38	M12	80	70	5	10	41	28	M10	60	50	5	8	31
160 M	1DA2 1DA3 1DB2	2 2 4	155	15	19	604 664	10	45	730	145	42	M16	110	90	10	12	45	42	M16	110	90	10	12	45
160 L	1DA4 1DB4	2 4	155	15	19	664	10	45	790	145	42	M16	110	90	10	12	45	42	M16	110	90	10	12	45

[1] The length is specified as far as the tip of the fan cover.

© Siemens AG 2015

2

Dimensional drawings

Type of construction IM B3

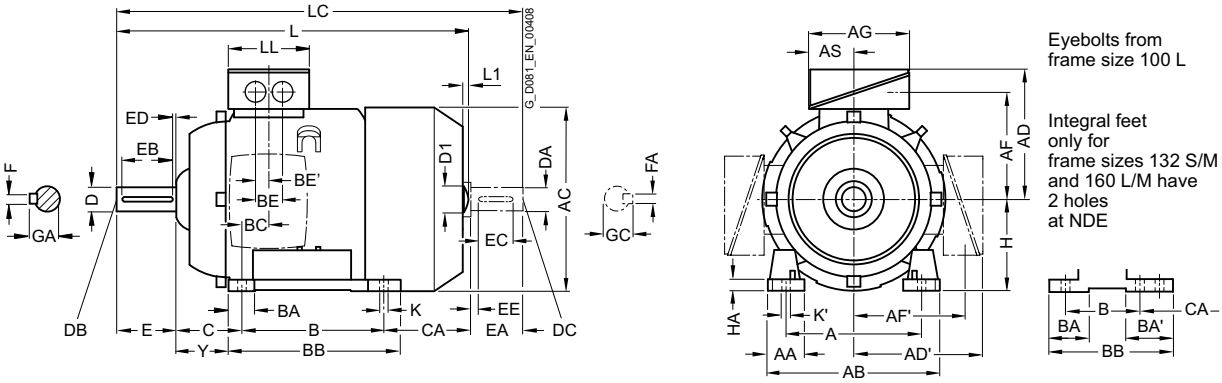

Types of construction IM B5 and IM V1

For flange dimensions, see Page 1/34 (**Z** = the number of retaining holes)

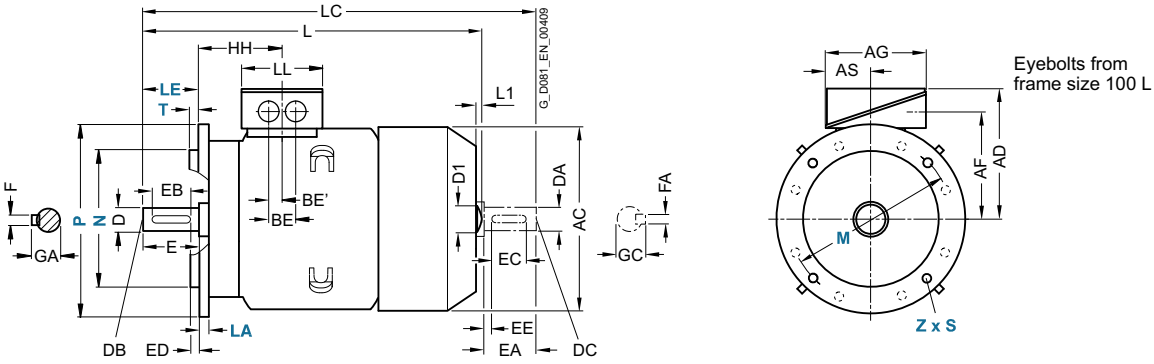

For motor			Dimension designation acc. to **IEC**																					
Frame size	Motor type 1LE15.1, 1LE16.1	No. of poles	A	AA	AB	AC	AD	AD'	AF	AF'	AG	AS	B*	BA	BA'	BB	BC	BE	BE'	C	CA*	H	HA	Y
71 M	1LE15.1	2, 4, 6	112	27	132	138.5	148	148	112	112	126	62	90	–	–	106	20.5	36	18	45	–	71	7	37
80 M	1LE15.1	2, 4, 6	125	27	150	156	158	158	122	122	129	62	100	–	–	118	21.5	36	18	50	–	80	8.5	41
90 S	1LE15.1	2, 4, 6	140	30.5	165	173.5	163	163	127	127	129	62	100	–	–	143	23.5	36	18	56	–	90	11	47
90 L	1LE15.1	2, 4, 6	140	30.5	165	173.5	163	163	127	127	129	62	125	–	–	143	23.5	36	18	56	–	90	11	47
100 L	All	2, 4, 6, 8	160	42	196	198	193	193	147	147	163	80.5	140	40	–	176	37.5	48	24	63	141	100	12	45
112 M	All	2, 4 6, 8	190	46	226	222	195	195	150	150	163	80.5	140	40	–	176	30	48	24	70	129.7	112	12	52
132 S	All	2, 4, 6, 8	216	53	256	262	214.5	214.5	169	169	163	80.5	140	44	81 [1]	218 [3]	26.5	48	24	89	–	132	15	69
132 M	All	2, 4, 6, 8	216	53	256	262	214.5	214.5	169	169	163	80.5	178	44	81 [1]	218	26.5	48	24	89	–	132	15	69
160 M	All	2, 4, 6, 8	254	60	300	314	265	265	213	213	190	92	210	51	95 [2]	300 [4]	37	60	30	108	–	160	18	85
160 L	All	2, 4, 6, 8	254	60	300	314	265	265	213	213	190	92	254	51	95 [2]	300	37	60	30	108	–	160	18	85

* This dimension is assigned in EN 50347 to the frame size listed.

[1] With screwed-on feet, dimension BA' is 43 mm.

[2] With screwed-on feet, dimension BA' is 51 mm.

[3] With screwed-on feet, dimension BB is 180 mm.

[4] With screwed-on feet, dimension BB is 256 mm.

© Siemens AG 2015

Dimensional drawings (continued)

Type of construction IM B35

For flange dimensions, see Page 1/34 (**Z** = the number of retaining holes)

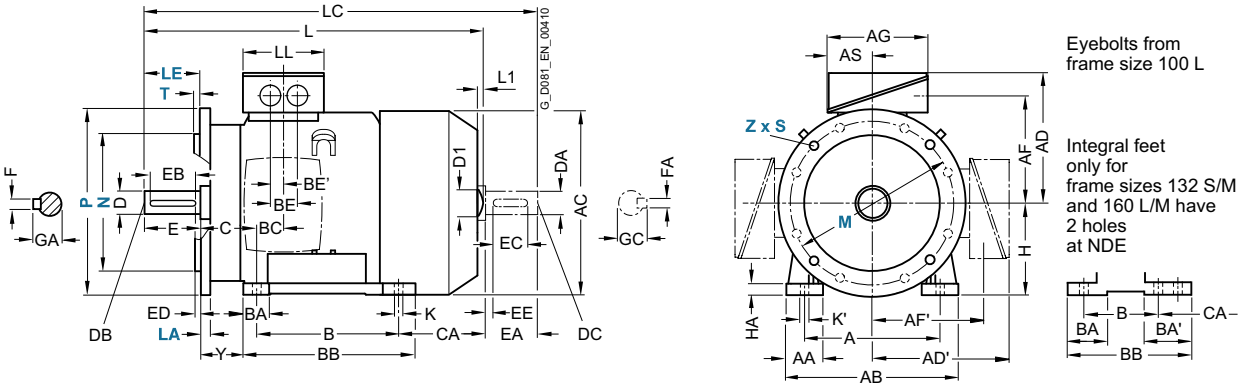

Type of construction IM B14

For flange dimensions, see Page 1/34 (**Z** = the number of retaining holes)

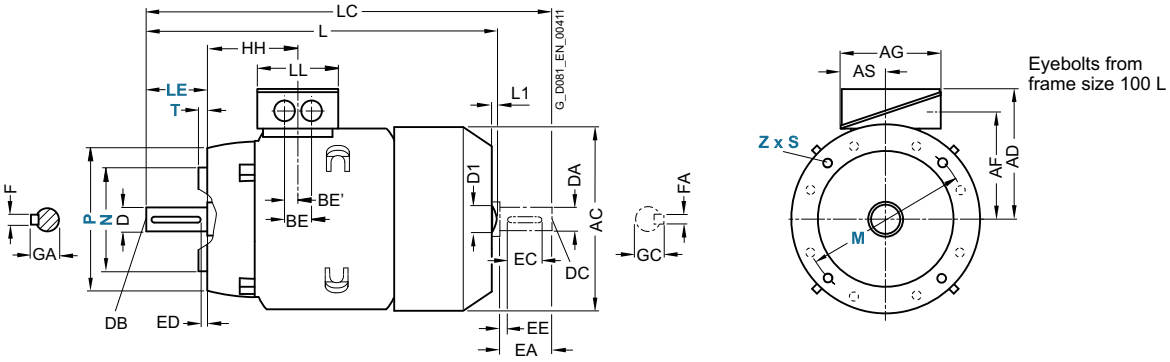

For motor			Dimension designation acc. to **IEC**								DE shaft extension							NDE shaft extension						
Frame size	Motor type 1LE15.1, 1LE16.1	No. of poles	HH	K	K'	L [1]	L1 [2]	D1	LC	LL	D	DB	E	EB	ED	F	GA	DA	DC	EA	EC	EE	FA	GC
71 M	1LE15.1	2, 4, 6	64.5	7	7	240	–	–	278	102	14	M5	30	22	4	5	16	14	M5	30	16	4	5	16
80 M	1LE15.1	2, 4, 6	71.5	10	10	292	–	–	343	102	19	M6	40	32	4	6	21.5	19	M6	40	22	4	6	21.5
90 S	1LE15.1	2, 4, 6	79.5	10	10	347	–	–	405	102	24	M8	50	40	5	8	27	19	M6	40	32	4	6	21.5
90 L	1LE15.1	2, 4, 6	79.5	10	10	347	–	–	405	102	24	M8	50	40	5	8	27	19	M6	40	32	4	6	21.5
100 L	All	2, 4, 6, 8	100.5	12	16	388.5	7	32	454	134	28	M10	60	50	5	8	31	24	M8	50	40	5	8	27
112 M	All	2, 4 6, 8	100.5	12	16	383.5 415.5	7	32	451.5 483.5	134	28	M10	60	50	5	8	31	24	M8	50	40	5	8	27
132 S	All	2, 4, 6, 8	115.5	12	16	456.5	8.5	39	535.5	134	38	M12	80	70	5	10	41	28	M10	60	50	5	8	31
132 M	All	2, 4, 6, 8	115.5	12	16	456.5	8.5	39	535.5	134	38	M12	80	70	5	10	41	28	M10	60	50	5	8	31
160 M	All	2, 4, 6, 8	145	15	19	594	10	45	730	165	42	M16	110	90	10	12	45	42	M16	110	90	10	12	45
160 L	All	2, 4, 6, 8	145	15	19	594	10	45	730	165	42	M16	110	90	10	12	45	42	M16	110	90	10	12	45

[1] For 1LE15 motors, plus dimension L1.

[2] Only for 1LE15 motors.

© Siemens AG 2015

Dimensional drawings

Type of construction IM B3

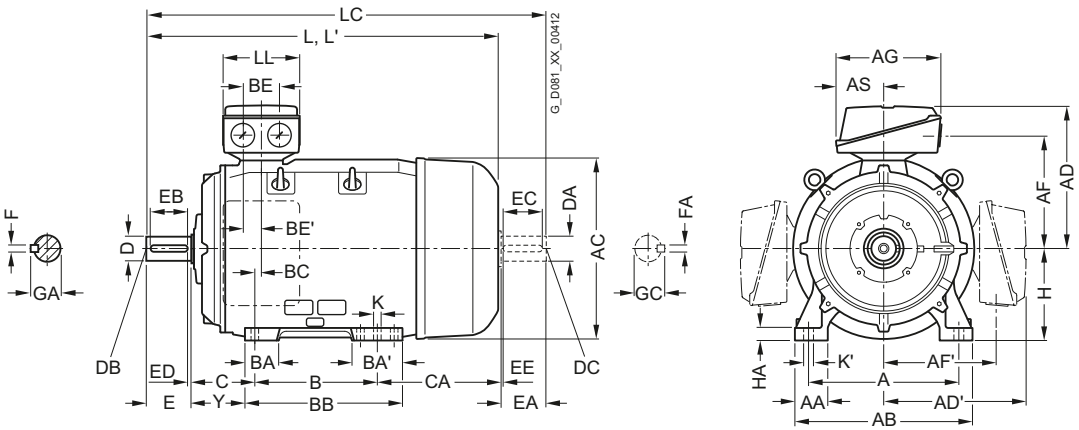

Types of construction IM B5 and IM V1

For flange dimensions, see Page 1/34 (**Z** = the number of retaining holes)

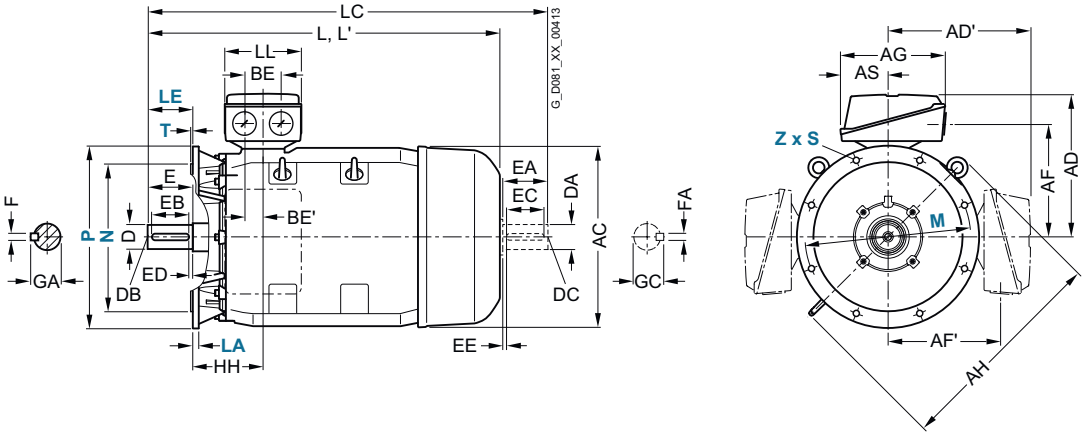

For motor			Dimension designation acc. to **IEC**																		
Frame size	Motor type 1LE1501-, 1LE1521-, 1LE1541-1LE1601-, 1LE1621-	No. of poles	A	AA	AB	AC	AD	AD'	AF	AF'	AG	AH	AS	B*	BA	BA'	BB	BC	BE	BE'	C	CA*
180 M/ 180 L	1EA2, 1EB2, 1EC6	2, 4, 6	279	65	339	356	286	286	234	234	190	468	92	241	85	120	328	34	60	30	121	202
	1EB4, 1EC4, 1EA6, 1EB6	2, 4, 6												279								
200 L	2AA4,2AA5, 2AB5, 2AC4,2AC5	2, 4, 6	318	70	378	396	315	315	259	259	266	533	112	305	104	104	355	31	85	42.5	133	177
	2AA6, 2AB6, 2AC6	2, 4, 6																				
225 S/ 225 M	2BB0, 2BD0,	4, 8	356	80	436	449	338	338	282	282	266	556	112	311	92	117	361	15	85	42.5	149	253
	2BB2, 2BC2, 2BD2, 2BB6, 2BC6, 2BD6	4, 6, 8																				
	2BA2, 2BA6	2																				
250 M	2CA2, 2CA6	2	406	100	490	497	410	410	322	322	319	620	145	349	102	102	409	24	110	55	168	230
	2CB2, 2CC2, 2CD2, 2CC6, 2CD6,	4, 6, 8																				
	2CB6	4																				300

* This dimension is assigned in EN 50347 to the frame size listed.

© Siemens AG 2015

Dimensional drawings (continued)

Type of construction IM B35

For flange dimensions, see Page 1/34 (**Z** = the number of retaining holes)

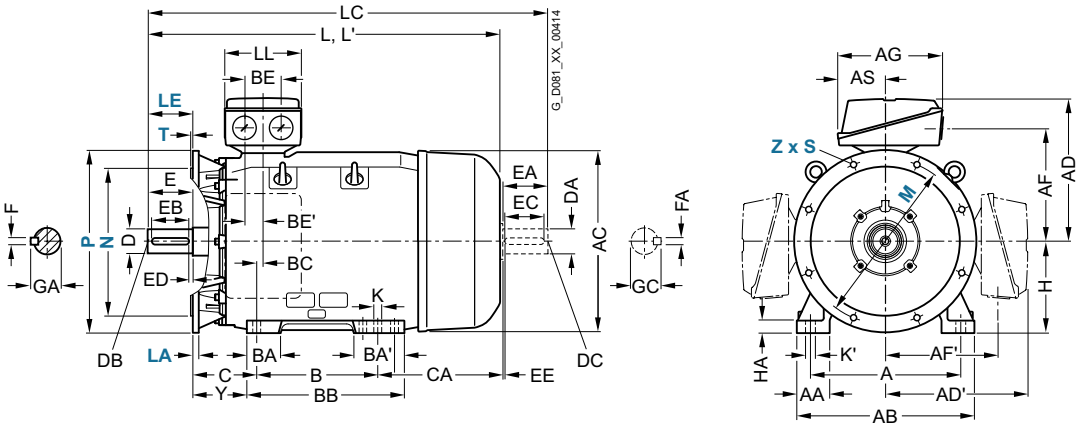

For motor	Dimension designation acc. to **IEC**										DE shaft extension							NDE shaft extension						
Motor type 1LE1501-, 1LE1521-, 1LE1541-, 1LE1601-, 1LE1621-	H	HA	Y	HH	K	K'	L	L' [1]	LC [2]	LL	D	DB	E	EB	ED	F	GA	DA	DC	EA	EC	EE	FA	GC
1EA2, 1EB2, 1EC6	180	20	95	155	15	19	668	668	784	165	48	M16	110	100	5	14	52	48	M16	110	100	5	14	51.5
1EB4, 1EC4, 1EA6, 1EB6							698	698	814															
2AA4,2AA5, 2AB5, 2AC4,2AC5	200	25	108	164	19	25	721	755	835	197	55	M20	110	100	5	16	59	55	M20	110	100	5	16	59
2AA6, 2AB6, 2AC6							746	780	860															
2BB0, 2BD0	225	34	124	164	19	25	788	–	903	197	60	M20	140	125	10	18	64	55	M20	110	100	5	16	59
2BB2, 2BC2, 2BD2, 2BB6, 2BC6, 2BD6							848		963															
2BA2, 2BA6							818	852	933		55		110	100	5	16	59	48	M16				14	51.5
2CA2, 2CA6	250	40	138	192	24	30	887	924	1002	233	60	M20	140	125	10	18	64	55	M20	110	100	5	16	59
2CB2, 2CC2, 2CD2, 2CC6, 2CD6								–	1032		65						69	60		140	125	10	18	64
2CB6							957		1072															

[1] For version with low-noise fan for 2-pole motors.

[2] In the low-noise version, a second shaft extension and/or mounted encoder is not possible.

© Siemens AG 2015

Dimensional drawings

Type of construction IM B3

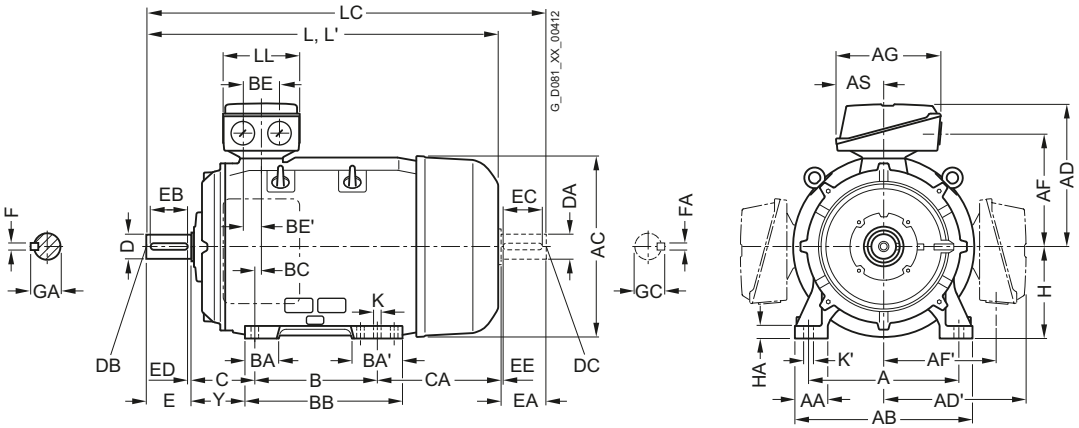

Types of construction IM B5 and IM V1

For flange dimensions, see Page 1/34 (**Z** = the number of retaining holes)

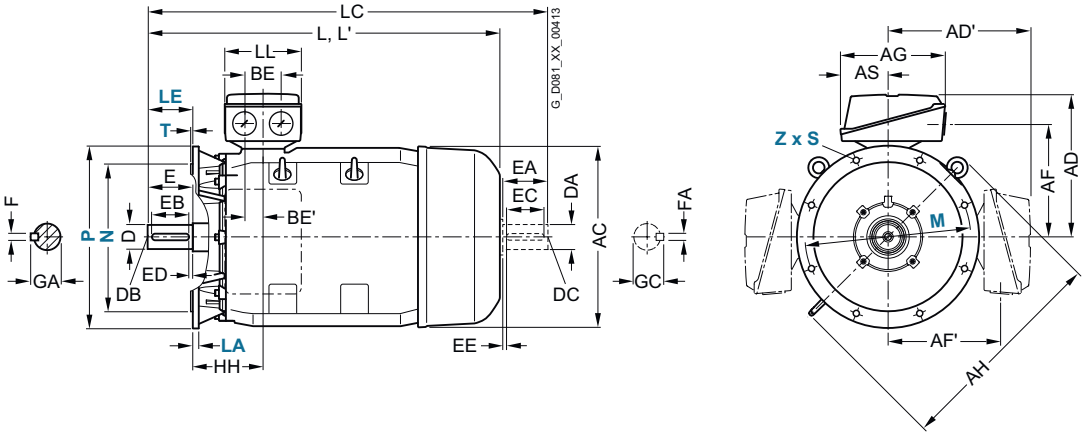

For motor			Dimension designation acc. to **IEC**																			
Frame size	Motor type 1LE1501-, 1LE1521-, 1LE1541- 1LE1601-, 1LE1621-	No. of poles	A	AA	AB	AC	AD	AD'	AF	AF'	AG	AH	AS	B*	BA	BA'	BB	BC	BE	BE'	C	CA*
280 S	2DA0	2	457	100	540	551	433	433	345	345	319	672	145	368	101	152	479	20	110	55	190	267
	2DB0, 2DC0, 2DD0	4, 6, 8												368								267
280 M	2DA6	2												419								326
	2DA2																					216
	2DB2, 2DC2, 2DD2, 2DC6, 2DD6	4, 6, 8																				
	2DB6	4																				326
315 S	3AA0	2	508	120	610	616	515	515	404	404	374	780	164	406	113	170	527	22	110	55	216	295
	3AB0, 3AC0, 3AD0	4, 6, 8																				
315 M	3AA2 [1]	2												457			578					409
	3AB2 [1]	4																				
	3AC2, 3AD2	6, 8												406			527					244
315 L [1]	3AA4	2												508			578					358
	3AB4, 3AC4, 3AD4, 3AC5, 3AD5, 3AD6	4, 6, 8																				
	3AA5, 3AA6	2												508	176	227	648					513
	3AB5, 3AB6, 3AC6	4, 6																				

* This dimension is assigned in EN 50347 to the frame size listed.

[1] With terminal box position right, terminal box left, and with order code **H01** only screwed-on feet with 3 drilled holes with dimension "B" (406, 457 and 508 mm). The dimension "BB" will then be 666 mm.

© Siemens AG 2015

Dimensional drawings (continued)

Type of construction IM B35

For flange dimensions, see Page 1/34 (**Z** = the number of retaining holes)

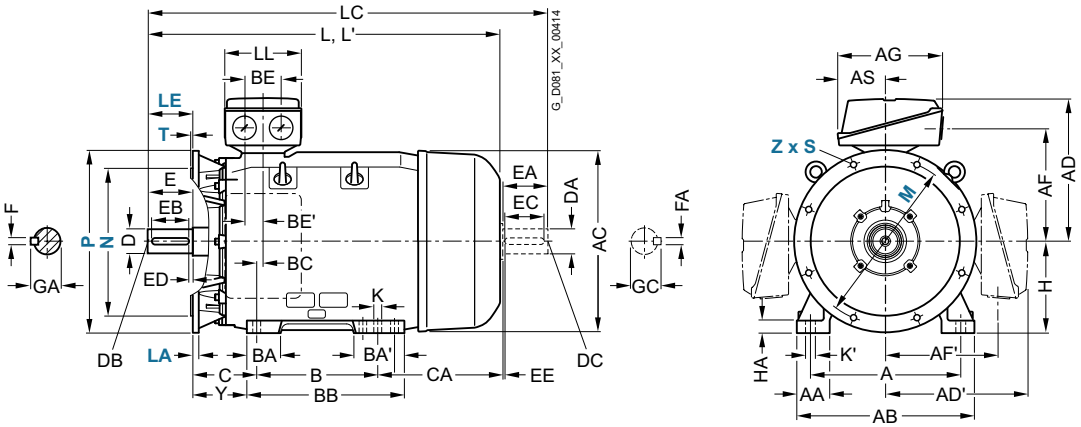

For motor	Dimension designation acc. to **IEC**										DE shaft extension							NDE shaft extension						
Motor type 1LE1501-, 1LE1521-, 1LE1541-, 1LE1601-, 1LE1621-	H	HA	Y	HH	K	K'	L	L' [1]	LC [2]	LL	D	DB	E	EB	ED	F	GA	DA	DC	EA	EC	EE	FA	GC
2DA0	280	40	160	210	24	30	960	998	1105	233	65	M20	140	125	10	18	69	60	M20	140	125	10	18	64
2DB0, 2DC0, 2DD0								–			75					20	79.5	65						69
2DA6							1070	1108	1215		65					18	69	60						64
2DA2							960	998	1105															
2DB2, 2DC2, 2DD2, 2DC6, 2DD6								–			75					20	79.5	65						69
2DB6							1070		1215															
3AA0	315	50	181	238	28	35	1052	1122	1197	299	65	M20	140	125	10	18	69	60	M20	140	125	10	18	64
3AB0, 3AC0, 3AD0							1082	–	1227		80		170	140	25	22	85	70					20	74.5
3AA2							1217	1287	1362		65		140	125	10	18	69	60					18	64
3AB2							1247	–	1392		80		170	140	25	22	85	70					20	74.5
3AC2, 3AD2							1082		1227															
3AA4							1217	1287	1362		65		140	125	10	18	69	60					18	64
3AB4, 3AC4, 3AD4, 3AC5, 3AD5, 3AD6							1247	–	1392		80		170	140	25	22	85	70					20	74.5
3AA5, 3AA6			146				1372	1442	1517		65		140	125	10	18	69	60					18	64
3AB5, 3AB6, 3AC6							1402	–	1547		80		170	140	25	22	85	70					20	74.5

[1] For version with low-noise fan for 2-pole motors.

[2] In the low-noise version, a second shaft extension and/or mounted encoder is not possible.

© Siemens AG 2015

Dimensional drawings

Type of construction IM B3

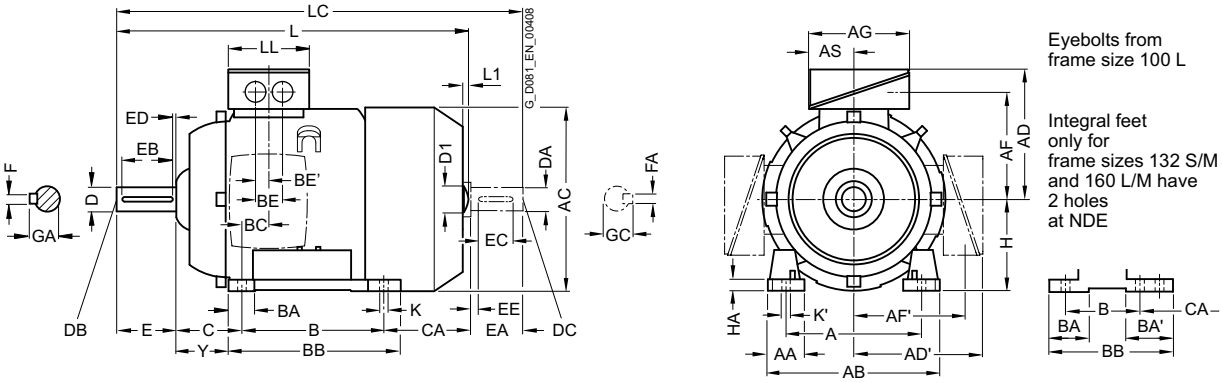

Types of construction IM B5 and IM V1

For flange dimensions, see Page 1/34 (**Z** = the number of retaining holes)

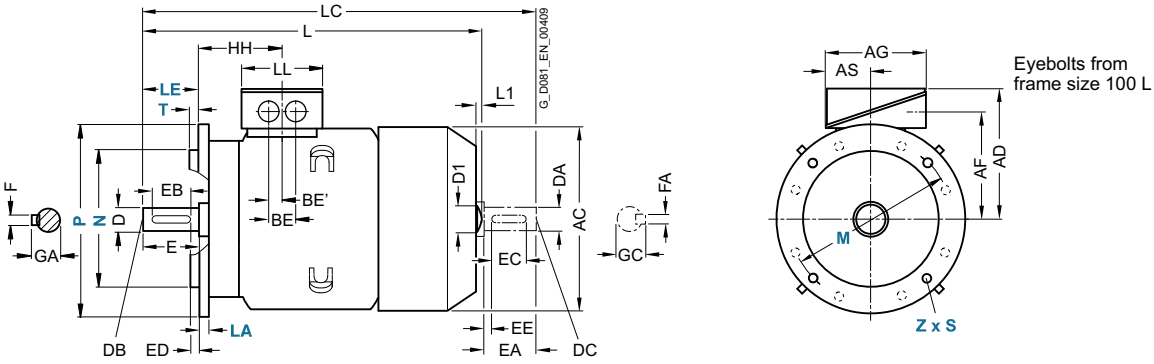

For motor			Dimension designation acc. to **IEC**																				
Frame size	Motor type 1LE15.3- 1LE16.3-	No. of poles	A	AA	AB	AC	AD	AD'	AF	AF'	AG	AS	B*	BA	BA'	BB	BC	BE	BE'	C	CA*	H	HA	Y
71 M	1LE15.3- 0..0, 0..2 0..3, 0..4	2, 4, 6	112	27	132	138.5	148	148	112	112	126	62	90	–	–	106	20.5	36	18	45	–	71	7	37
80 M	1LE15.3- 0..0, 0..2 0..3, 0..4	2, 4, 6	125	27	150	156	158	158	122	122	129	62	100	–	–	118	21.5	36	18	50	–	80	8.5	41
90 S	1LE15.3- 0..0, 0..2 0..3, 0..4	2, 4, 6	140	30.5	165	173.5	163	163	127	127	129	62	100	–	–	143	23.5	36	18	56	–	90	11	47
90 L	1LE15.3	2, 4, 6	140	30.5	165	173.5	163	163	127	127	129	62	125	–	–	143	23.5	36	18	56	–	90	11	47
100 L	All	2, 4, 6	160	42	196	198	193	193	147	147	163	80.5	140	40	–	176	37.5	48	24	63	176	100	12	45
112 M	All	2, 4, 6	190	46	226	222	195	195	150	150	163	80.5	140	40	–	176	30	48	24	70	155	112	12	52
132 S	1CA0, 1CC0	2, 6	216	53	256	262	214.5	214.5	169	169	163	80.5	140	44	81 [1]	218 [2]	26.5	48	24	89	128.5	132	15	69
	1CA1, 1CB0	2, 4													–						178.5			
132 M	1CC2	6	216	53	256	262	214.5	214.5	169	169	163	80.5	178	44	81 [1]	218	26.5	48	24	89	128.5	132	15	69
	1CB2, 1CC3	4, 6, 8													–						178.5			
160 M	All	2, 4, 6	254	60	300	314	261	261	213	213	190	92	210	51	95 [3]	300 [4]	37	60	30	108	148	160	18	85
160 L	All	2, 4, 6	254	60	300	314	261	261	213	213	190	92	254	51	95 [3]	300	37	60	30	108	208	160	18	85

* This dimension is assigned in EN 50347 to the frame size listed.

[1] With screwed-on feet, dimension BA' is 43 mm.

[2] With screwed-on feet, dimension BB is 180 mm.

[3] With screwed-on feet, dimension BA' is 51 mm.

[4] With screwed-on feet, dimension BB is 256 mm.

© Siemens AG 2015

Dimensional drawings (continued)

Type of construction IM B35

For flange dimensions, see Page 1/34 (**Z** = the number of retaining holes)

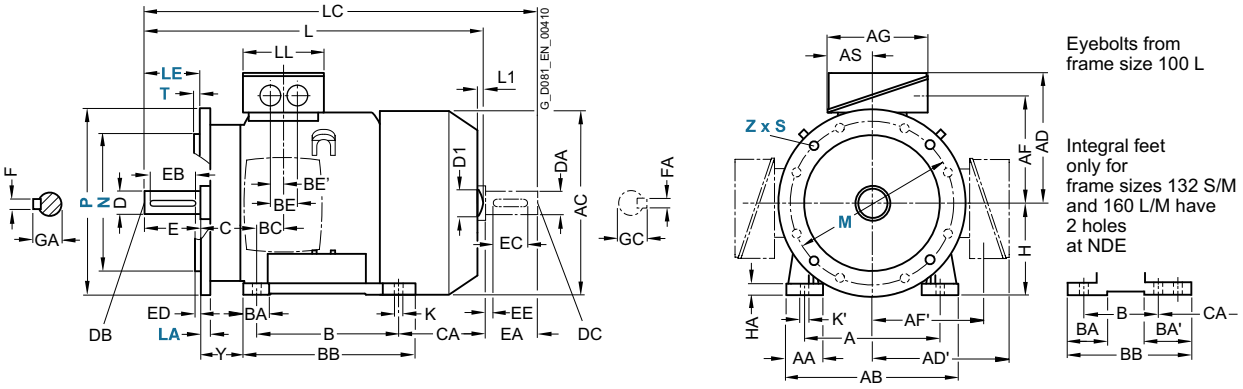

Type of construction IM B14

For flange dimensions, see Page 1/34 (**Z** = the number of retaining holes)

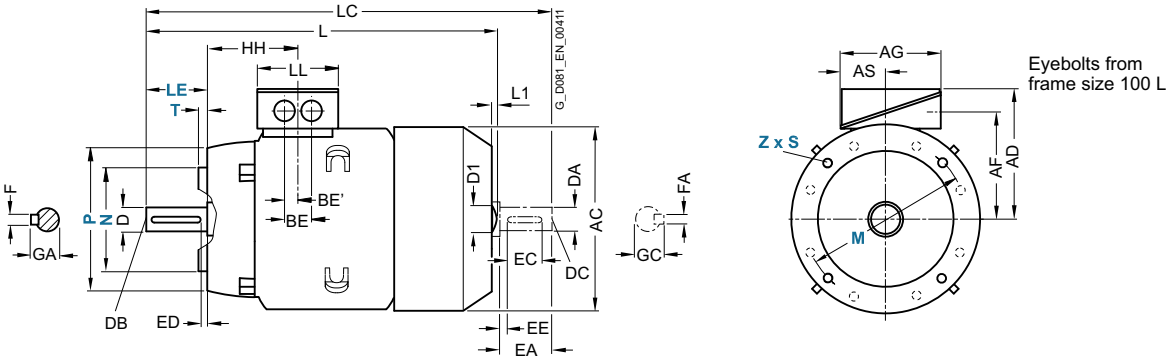

For motor			Dimension designation acc. to **IEC**								DE shaft extension							NDE shaft extension						
Frame size	Motor type 1LE15.3- 1LE16.3-	No. of poles	HH	K	K'	L [1]	L1 [2]	D1	LC	LL	D	DB	E	EB	ED	F	GA	DA	DC	EA	EC	EE	FA	GC
71 M	1LE15.3- 0..0, 0..2 0..3, 0..4	2, 4, 6	64.5	7	7	240 280	–	–	278 318	102	14	M5	30	22	4	5	16	14	M5	30	16	4	5	16
80 M	1LE15.3- 0..0, 0..2 0..3, 0..4	2, 4, 6	71.5	10	10	292 327	–	–	343 378	102	19	M6	40	32	4	6	21.5	19	M6	40	16	4	6	21.5
90 S	1LE15.3- 0..0, 0..2 0..3, 0..4	2, 4, 6	79.5	10	10	347 387	–	–	405 445	102	24	M8	50	40	5	8	27	19	M6	40	27	4	6	21.5
90 L	1LE15.3	2, 4, 6	79.5	10	10	387	–	–	445	102	24	M8	50	40	5	8	27	19	M6	40	27	4	6	21.5
100 L	All	2, 4, 6	100.5	12	16	425.5	7	32	489	134	28	M10	60	50	5	8	31	24	M8	50	40	5	8	27
112 M	All	2, 4, 6	100.5	12	16	408.5	7	32	475	134	28	M10	60	50	5	8	31	24	M8	50	40	5	8	27
132 S	1CA0, 1CC0	2, 6	115.5	12	16	458	8.5	39	535.5	134	38	M12	80	70	5	10	41	28	M10	60	50	5	8	31
	1CA1, 1CB0	2, 4				508			585.5															
132 M	1CC2	6	115.5	12	16	458	8.5	39	535.5	134	38	M12	80	70	5	10	41	28	M10	60	50	5	8	31
	1CB2, 1CC3	4, 6				508			585.5															
160 M	All	2, 4, 6	145	15	19	596	10	45	730	165	42	M16	110	90	10	12	45	42	M16	110	90	10	12	45
160 L	All	2, 4, 6	145	15	19	656	10	45	790	165	42	M16	110	90	10	12	45	42	M16	110	90	10	12	45

[1] For 1LE15 motors, plus dimension L1.

[2] Only for 1LE15 motors.

© Siemens AG 2015

Dimensional drawings

Type of construction IM B3

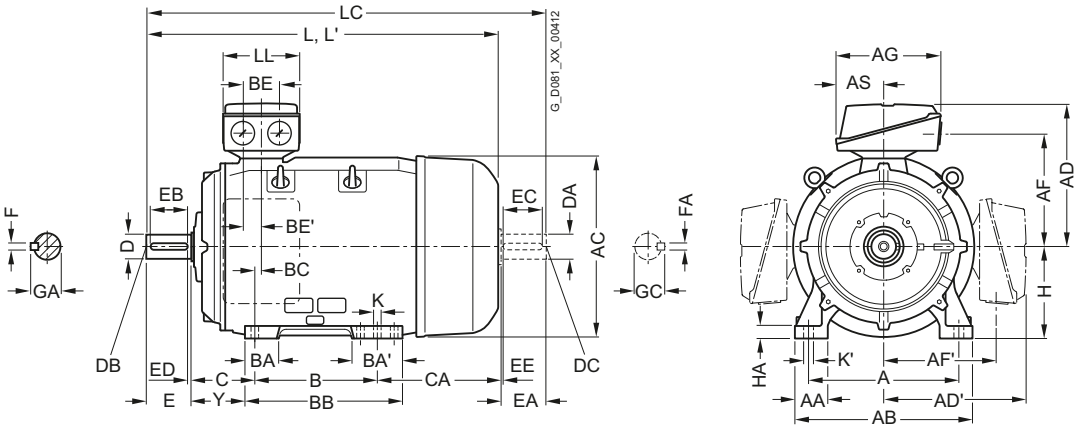

Types of construction IM B5 and IM V1

For flange dimensions, see Page 1/34 (**Z** = the number of retaining holes)

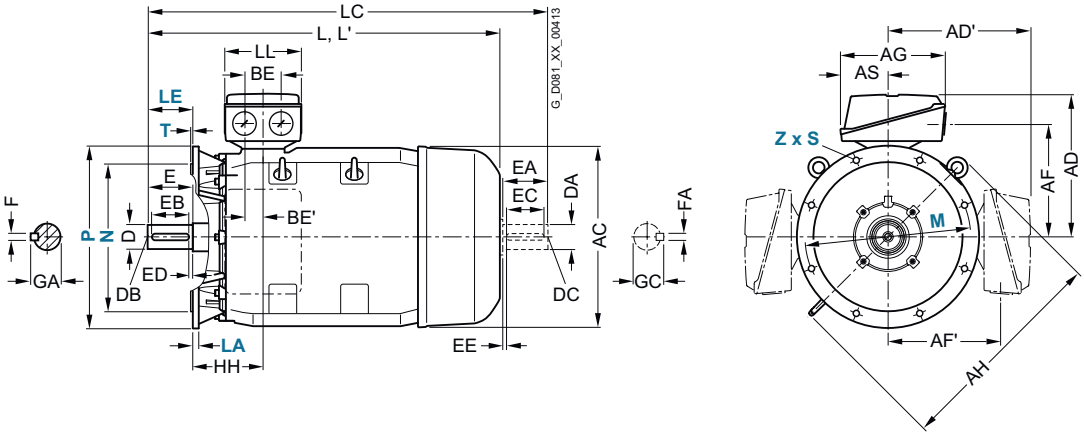

For motor			Dimension designation acc. to **IEC**																			
Frame size	Motor type 1LE1503-, 1LE1523-, 1LE1543- 1LE1603-, 1LE1623-, 1LE1643-	No. of poles	A	AA	AB	AC	AD	AD'	AF	AF'	AG	AH	AS	B*	BA	BA'	BB	BC	BE	BE'	C	CA*
180 M/ 180 L	1EB2, 1EC4 1EA2, 1EB4	4, 6 2, 4	279	65	339	356	286	286	234	234	190	468	92	241	85	120	328	34	60	30	121	202
200 L	2AA4, 2AC4 2AA5. 2AB5.2AC5	2, 6 2, 4, 6	318	70	378	396	315	315	259	259	266	533	112	305	104	104	355	31	85	42.5	133	177
225 S 225 M	2BB0 2BA2 2BB2, 2BC2	4 2 4, 6	356 356	80 80	436 436	449 449	338 338	338 338	282 282	282 282	266 266	556 556	112 112	286 311	92 92	117 117	361 361	15 15	85 85	42.5 42.5	149 149	218 253
250 M	2CA2 2CB2, 2CC2	2 4, 6	406	100	490	497	410	410	322	322	319	620	145	349	102	102	409	24	110	55	168	230
280 S	2DA0 2DB0, 2DC0	2 4, 6	457	100	540	551	433	433	345	345	319	672	145	368	101	152	479	20	110	55	190	267
280 M	2DC2 2DA2 2DB2	6 2 4	457	100	540	551	433	433	345	345	319	672	145	419	101	152	479	20	110	55	190	216 326
315 S	3AA0 3AB0, 3AC0	2 4, 6	508	120	610	616	515	515	404	404	374	780	164	406	113	170	527	22	110	55	216	295
315 M [1]	3AA2 3AB2, 3AC2	2 4, 6	508	120	610	616	515	515	404	404	374	780	164	457	113	170	578	22	110	55	216	409
315 L [1]	3AA4 3AB4, 3AC4 3AA5 3AB5, 3AC5, 3AC6	2 4, 6 2 4, 6	508	120	610	616	515	515	404	404	374	780	164	508	113 176	170 227	578 648	22	110	55	216	358 513

* This dimension is assigned in EN 50347 to the frame size listed.

[1] With order codes for terminal box positions (**K05**, **K06**, **H01**) only screwed-on feet with 3 drilled holes with dimension "B" (406, 457 and 506 mm). The dimension "BB" will then be 666 mm.

© Siemens AG 2015

Dimensional drawings (continued)

Type of construction IM B35

For flange dimensions, see Page 1/34 (**Z** = the number of retaining holes)

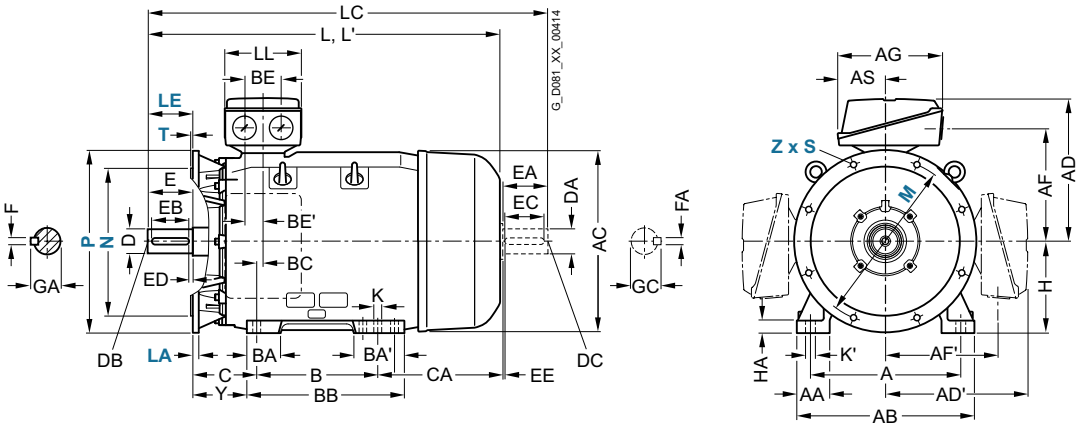

For motor	Dimension designation acc. to **IEC**										DE shaft extension							NDE shaft extension						
Motor type 1LE1503-, 1LE1523-, 1LE1543- 1LE1603-, 1LE1623-, 1LE1643-	H	HA	Y	HH	K	K'	L	L' [1]	LC [2]	LL	D	DB	E	EB	ED	F	GA	DA	DC	EA	EC	EE	FA	GC
1EB2, 1EC4	180	20	95	155	15	19	668	668	784	165	48	M16	110	100	5	14	51.5	48	M16	110	100	5	14	51.5
1EA2, 1EB4							698	698	814															
2AA4, 2AC4	200	25	108	164	19	25	721	755	835	197	55	M20	110	100	5	16	59	55	M20	110	100	5	16	59
2AA5. 2AB5.2AC5							746	780	860															
2BB0	225	34	124	164	19	25	788	–	903	197	60	M20	140	125	10	18	64	55	M20	110	100	5	16	59
2BA2	225	34	124	164	19	25	818	852	933	197	55	M20	110	100	5	16	59	48	M16	110	100	5	14	51.5
2BB2, 2BC2							848	–	963		60		140	125	10	18	64	55	M20				16	59
2CA2	250	40	138	192	24	30	887	924	1002	233	60	M20	140	125	10	18	64	55	M20	110	100	5	16	59
2CB2, 2CC2								–	1032		65						69	60		140	125	10	18	64
2DA0	280	40	160	210	24	30	960	998	1105	233	65	M20	140	125	10	18	69	60	M20	140	125	10	18	64
2DB0, 2DC0								–			75					20	79.5	65						69
2DC2	280	40	160	210	24	30	960	–	1105	233	75	M20	140	125	10	20	79.5	65	M20	140	125	10	18	69
2DA2							1070	1108	1215		65					18	69	60						64
2DB2								–			75					20	79.5	65						69
3AA0	315	50	181	238	28	35	1052	1122	1197	299	65	M20	140	125	10	18	69	60	M20	140	125	10	18	64
3AB0, 3AC0							1082	–	1227		80		170	140	25	22	85	70					20	74.5
3AA2	315	50	181	238	28	35	1217	1287	1362	299	65	M20	140	125	10	18	69	60	M20	140	125	10	18	64
3AB2, 3AC2							1247	–	1392		80		170	140	25	22	85	70					20	74.5
3AA4	315	50	181	238	28	35	1217	1287	1362	299	65	M20	140	125	10	18	69	60	M20	140	125	10	18	64
3AB4, 3AC4							1247	–	1392		80		170	140	25	22	85	70					20	74.5
3AA5			146				1372	1442	1517		65		140	125	10	18	69	60					18	64
3AB5, 3AC5, 3AC6							1402	–	1547		80		170	140	25	22	85	70					20	74.5

[1] For version with low-noise fan for 2-pole motors.

[2] In the low-noise version, a second shaft extension and/or mounted encoder is not possible.

© Siemens AG 2015

2

Dimensional drawings

Type of construction IM B3

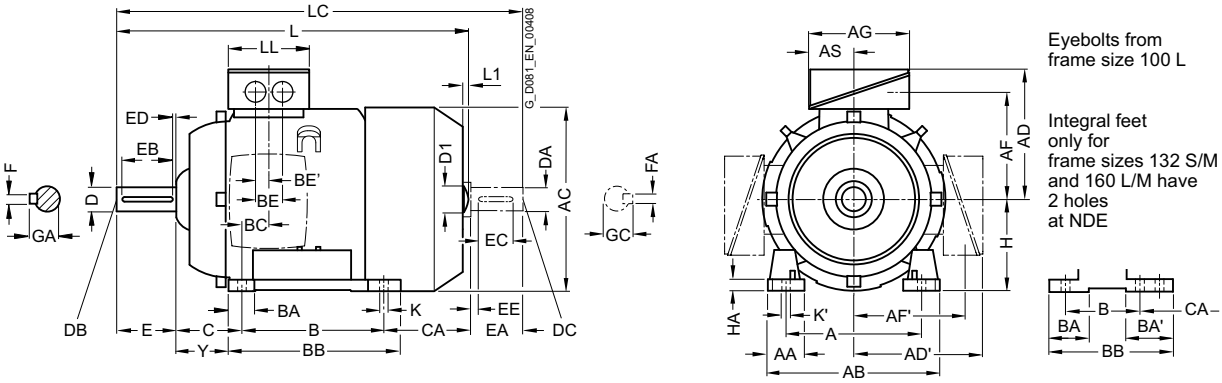

Types of construction IM B5 and IM V1

For flange dimensions, see Page 1/34 (**Z** = the number of retaining holes)

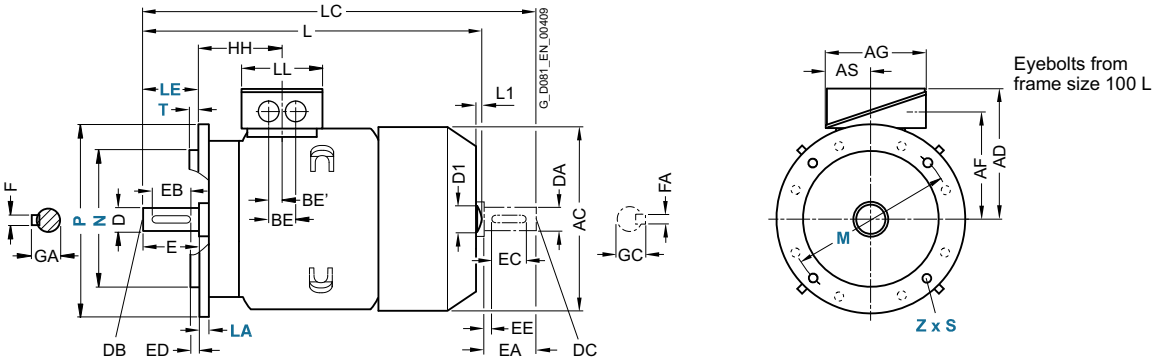

For motor			Dimension designation acc. to **IEC**																				
Frame size	Motor type 1LE1504- 1LE1604-	No. of poles	A	AA	AB	AC	AD	AD'	AF	AF'	AG	AS	B*	BA	BA'	BB	BC	BE	BE'	C	CA*	H	HA	Y
100 L	1AA4 1AB4 1AB5	2 4 4	160	42	196	198	193	193	147	147	163	80.5	140	40	–	176	37.5	48	24	63	176	100	12	45
112 M	1BA2 1BB2	2 4	190	46	226	222	195	195	150	150	163	80.5	140	40	–	176	30	48	24	70	155	112	12	52
132 S	1CA0 1CA1 1CB0	2 2 4	216	53	256	262	214.5	214.5	169	169	163	80.5	140	44	81 [1] – –	218 [2]	26.5	48	24	89	128.5 178.5 178.5	132	15	69
132 M	1CB2	4	216	53	256	262	214.5	214.5	169	169	163	80.5	178	44	–	218	26.5	48	24	89	178.5	132	15	69
160 M	1DA2 1DA3 1DB2	2 2 4	254	60	300	314	261	261	213	213	190	92	210	51	95 [3]	300 [4]	37	60	30	108	148	160	18	85
160 L	1DA4 1DB4	2 4	254	60	300	314	261	261	213	213	190	92	254	51	95 [3]	300	37	60	30	108	208	160	18	85

* This dimension is assigned in EN 50347 to the frame size listed.

[1] With screwed-on feet, dimension BA' is 43 mm.

[2] With screwed-on feet, dimension BB is 180 mm.

[3] With screwed-on feet, dimension BA' is 51 mm.

[4] With screwed-on feet, dimension BB is 256 mm.

© Siemens AG 2015

Dimensional drawings (continued)

Type of construction IM B35

For flange dimensions, see Page 1/34 (**Z** = the number of retaining holes)

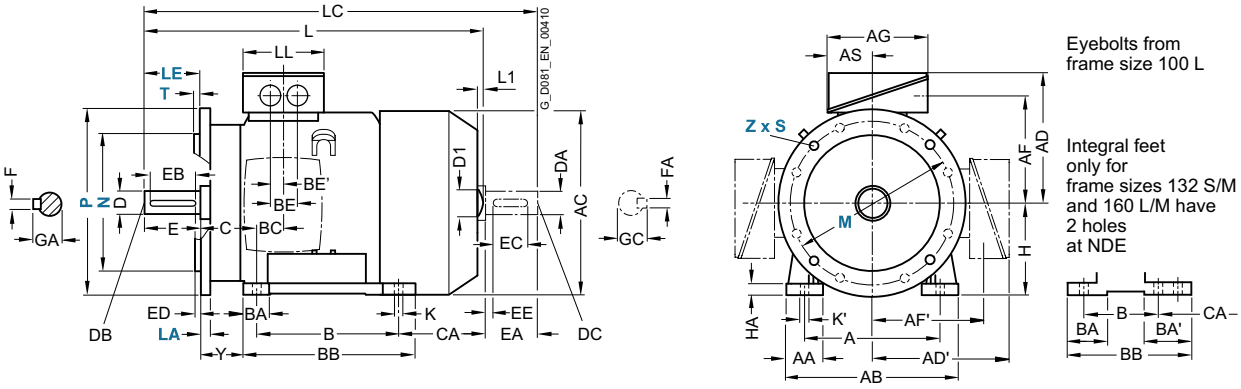

Type of construction IM B14

For flange dimensions, see Page 1/34 (**Z** = the number of retaining holes)

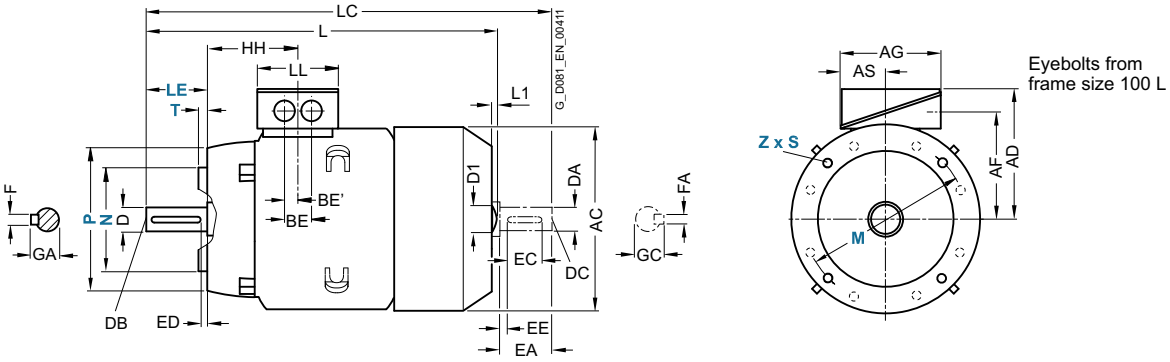

For motor			Dimension designation acc. to **IEC**								DE shaft extension							NDE shaft extension						
Frame size	Motor type 1LE1504- 1LE1604-	No. of poles	HH	K	K'	L [1]	L1 [2]	D1	LC	LL	D	DB	E	EB	ED	F	GA	DA	DC	EA	EC	EE	FA	GC
100 L	1AA4	2	100.5	12	16	425	7	32	489	134	28	M10	60	50	5	8	31	24	M8	50	40	5	8	27
	1AB4	4																						
	1AB5	4				476.5	7																	
112 M	1BA2	2	100.5	12	16	408.5	7	32	475	134	28	M10	60	50	5	8	31	24	M8	50	40	5	8	27
	1BB2	4				466.5	7																	
132 S	1CA0	2	115.5	12	16	458	8.5	39	535.5	134	38	M12	80	70	5	10	41	28	M10	60	50	5	8	31
	1CA1	2				508			585.5															
	1CB0	4				508			585.5															
132 M	1CB2	4	115.5	12	16	508	8.5	39	585.5	134	38	M12	80	70	5	10	41	28	M10	60	50	5	8	31
160 M	1DA2	2	145	15	19	596	10	45	730	165	42	M16	110	90	10	12	45	42	M16	110	90	10	12	45
	1DA3	2				656																		
	1DB2	4																						
160 L	1DA4	2	145	15	19	656	10	45	790	165	42	M16	110	90	10	12	45	42	M16	110	90	10	12	45
	1DB4	4																						

[1] For 1LE15 motors, plus dimension L1.

[2] Only for 1LE15 motors.

© Siemens AG 2015

2

Dimensional drawings

Type of construction IM B3

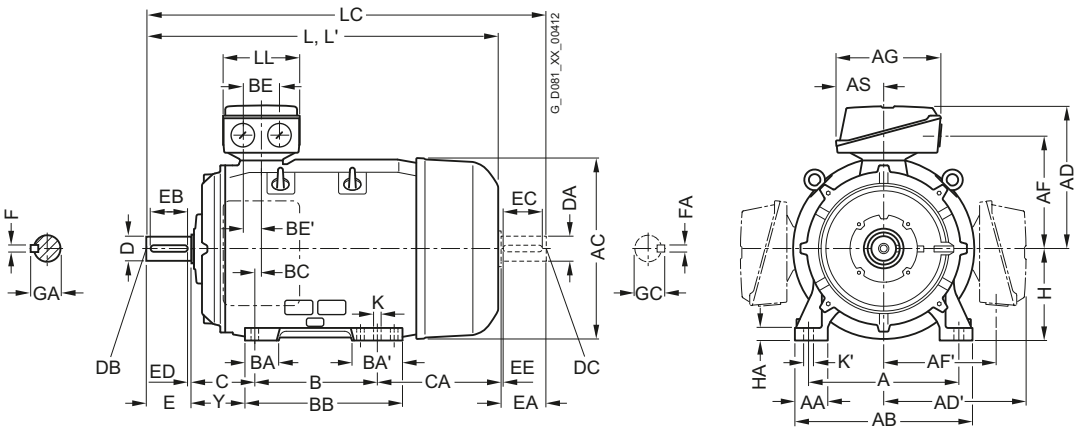

Types of construction IM B5 and IM V1

For flange dimensions, see Page 1/34 (**Z** = the number of retaining holes)

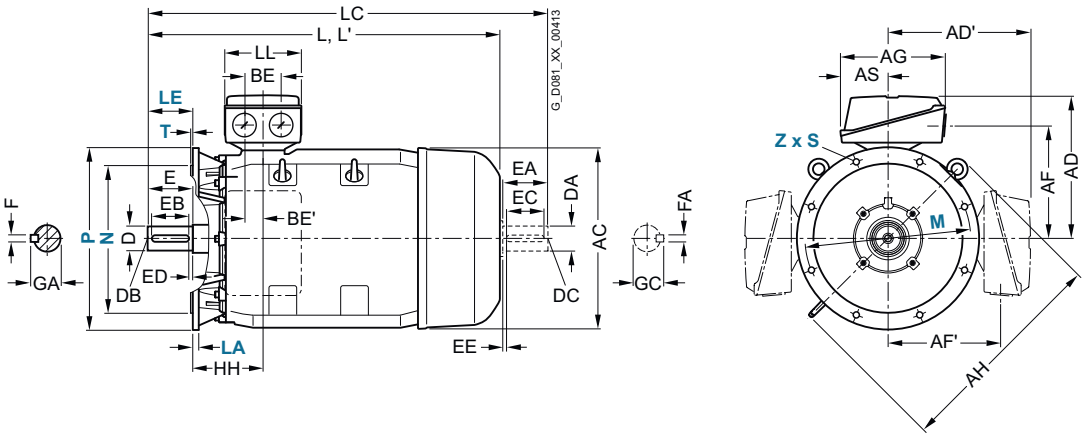

For motor			Dimension designation acc. to **IEC**																		
Frame size	Motor type 1LE1504- 1LE1604-	No. of poles	A	AA	AB	AC	AD	AD'	AF	AF'	AG	AH	AS	B*	BA	BA'	BB	BC	BE	BE'	C	CA*
180 M	1EA2	2	279	65	339	356	286	286	234	234	190	468	92	241	85	120	328	34	60	30	121	202
180 M	1EB2	4																				
180 L	1EB4	4																				
200 L	2AA4	2	318	70	378	396	315	315	259	259	266	533	112	305	104	104	355	31	85	42.5	133	177
	2AA5, 2AB5	2, 4																				
225 S	2BB0	4	356	80	436	449	338	338	282	282	266	556	112	286	92	117	361	15	85	42.5	149	218
225 M	2BA2	2	356	80	436	449	338	338	282	282	266	556	112	311	92	117	361	15	85	42.5	149	253
	2BB2	4																				
250 M	2CA2	2	406	100	490	497	410	410	322	322	319	620	145	349	102	102	409	24	110	55	168	230
	2CB2	4																				
280 S	2DA0	2	457	100	540	551	433	433	345	345	319	672	145	368	101	152	479	20	110	55	190	267
	2DB0	4																				
280 M	2DA2	2	457	100	540	551	433	433	345	345	319	672	145	419	101	152	479	20	110	55	190	216
	2DB2	4																				326
315 S	3AA0	2	508	120	610	616	515	515	404	404	374	780	164	406	113	170	527	22	110	55	216	295
315 M [2]	3AB0	4	508	120	610	616	515	515	404	404	374	780	164	457	113	170	527	22	110	55	216	295
315 M [1]	3AA2	2															578					409
	3AB2	4																				
315 L [1]	3AA4	2	508	120	610	616	515	515	404	404	374	780	164	508	113	170	578	22	110	55	216	358
	3AB4	4																				
	3AA5	2													176	227	648					513
	3AB5	4																				

* This dimension is assigned in EN 50347 to the frame size listed. Please note that version 3AB0 does not comply with EN 50347 with respect to assignment of this dimension to a frame size.

[1] With order codes for terminal box positions (**K05**, **K06**, **H01**) only screwed-on feet with 3 drilled holes with dimension "B" (406, 457 and 506 mm). The dimension "BB" will then be 666 mm.

[2] 1LE1504-3AB0 and 1LE1604-3AB0 4-pole motors cannot be constructed in standard frame size 315 S because they require the longer housing of frame size 315 M in order to achieve the requisite efficiency levels. The foot clearance dimension "B" therefore changes from 406 to 457 mm. The motors comply with standard IEC 60034, but not with standard EN 50347 in this respect.

© Siemens AG 2015

Dimensional drawings (continued)

Type of construction IM B35

For flange dimensions, see Page 1/34 (**Z** = the number of retaining holes)

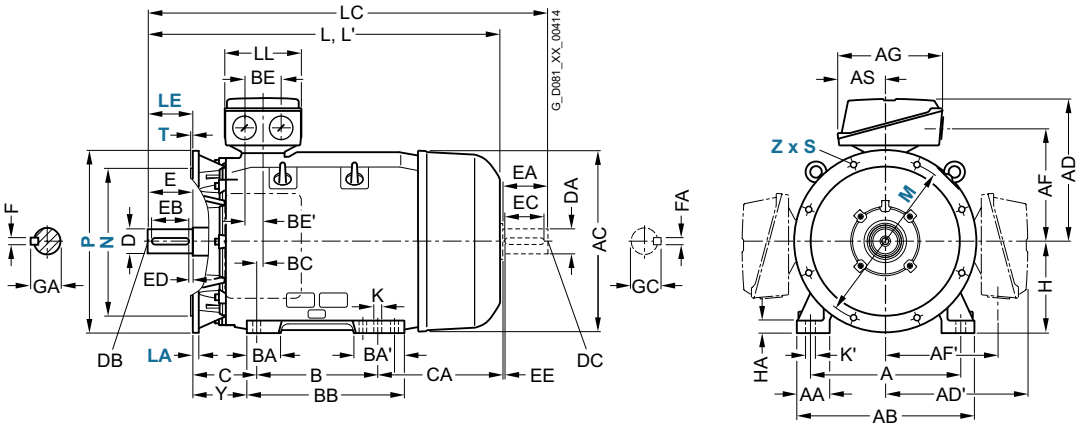

For motor		Dimension designation acc. to **IEC**										DE shaft extension							NDE shaft extension						
Motor type 1LE1504- 1LE1604-	No. of poles	H	HA	Y	HH	K	K'	L	L' [1]	LC [2]	LL	D	DB	E	EB	ED	F	GA	DA	DC	EA	EC	EE	FA	GC
1EA2	2	180	20	95	155	15	19	698	698	814	165	48	M16	110	100	5	14	52	48	M16	110	100	5	14	51.5
1EB2	4							668	668	784															
1EB4	4							698	698	814															
2AA4	2	200	25	108	164	19	25	746	755	835	197	55	M20	110	100	5	16	59	55	M20	110	100	5	16	59
2AA5, 2AB5	2, 4							746	780	860															
2BB0	4	225	34	124	164	19	25	848	–	903	197	60	M20	140	125	10	18	64	55	M20	110	100	5	16	59
2BA2	2	225	34	124	164	19	25	818	852	933	197	55	M20	110	100	5	16	59	48	M16	110	100	5	14	51.5
2BB2	4							928	–	963		60		140	125	10	18	64	55	M20				16	59
2CA2	2	250	40	138	192	24	30	887	924	1002	233	60	M20	140	125	10	18	64	55	M20	110	100	5	16	59
2CB2	4							957	–	1032		65						69	60		140	125	10	18	64
2DA0	2	280	40	160	210	24	30	1070	998	1105	233	65	M20	140	125	10	18	69	60	M20	140	125	10	18	64
2DB0	4								–			75					20	79.5	65						69
2DA2	2	280	40	160	210	24	30	1070	1108	1215	233	65	M20	140	125	10	18	69	60	M20	140	125	10	18	64
2DB2	4								–			75					20	79.5	65						69
3AA0	2	315	50	181	238	28	35	1052	1122	1197	299	65	M20	140	125	10	18	69	60	M20	140	125	10	18	64
3AB0	4	315	50	181	238	28	35	1287	–	1227	299	80	M20	170	140	25	22	85	70	M20	140	125	10	20	74.5
3AA2	2							1217	1287	1362		65		140	125	10	18	69	60					18	64
3AB2	4							1287	–	1392		80		170	140	25	22	85	70					20	74.5
3AA4	2	315	50	181	238	28	35	1217	1287	1362	299	65	M20	140	125	10	18	69	60	M20	140	125	10	18	64
3AB4	4							1402	–	1392		80		170	140	25	22	85	70					20	74.5
3AA5	2			146				1372	1442	1517		65		140	125	10	18	69	60					18	64
3AB5	4							1402	–	1547		80		170	140	25	22	85	70					20	74.5

[1] For version with low-noise fan for 2-pole motors.

[2] In the low-noise version, a second shaft extension and/or mounted encoder is not possible.

© Siemens AG 2015

Notes

© Siemens AG 2015



4/2 Orientation
4/2 • Overview
4/2 Classification of zones
4/3 Types of protection
4/3 Certification
4/4 Overview of SIMOTICS XP 1MA/1MB1/1MJ/1LA/1LG/1PQ8 explosion-proof motors
4/5 • Benefits
4/5 • Application
4/6 • Technical specifications
4/6 General information
4/6 Zone 1 with type of protection Ex e II increased safety "e"
4/6 Zone 1 with type of protection Ex de IIC explosion-proof enclosure "d"
4/6 Type of protection Ex nA for use in Zone 2
4/6 Type of protection Ex tb IIIC and Ex tc IIIB for use in Zones 21 and 22
4/6 Type of protection Ex nA/Ex tc for use in Zone 2/22
4/6 Converter operation
4/7 VIK version
4/7 Ex certification EAC for the Eurasian customs union
4/7 Coolant temperature
4/8 Article number code
4/8 • Selection and ordering data

4/9 Motors for Zone 21/22 or 2 in type of protection Ex t or Ex n
Motors with IE1 Standard Efficiency
4/9 • Aluminum series 1MB10 self-ventilated
Motors with IE2 High Efficiency
4/11 • Aluminum series 1MB10, self-ventilated
4/13 • Cast-iron series 1MB15, 1MB16 self-ventilated
Motors with IE3 Premium Efficiency
4/17 • Aluminum series 1MB10, self-ventilated
4/18 • Cast-iron series 1MB15 1MB16 self-ventilated

4/21 Supplements to article numbers and special versions
4/21 Voltages
4/23 Types of construction
4/27 Motor protection
4/29 Terminal box position
4/31 Options
4/38 Accessories

4/40 Dimensions
4/40 Overall dimensions
4/41 Notes on the dimensions
4/41 Dimension sheet generator
Aluminum series
Self-ventilated 1MB1011, 1MB1012, 1MB1021, 1MB1022, 1MB1031, 1MB1032
4/42 • Frame sizes 80 M to 160 L
Self-ventilated 1MB1013, 1MB1023, 1MB1033
4/44 • Frame sizes 80 M to 160 L
Cast-iron series
Self-ventilated 1MB1511, 1MB1521, 1MB1531, 1MB1611, 1MB1621, 1MB1631
4/46 • Frame sizes 100 L to 160 L
4/48 • Frame sizes 180 M to 250 M
4/50 • Frame sizes 280 S to 315 L
Self-ventilated 1MB1513, 1MB1523, 1MB1533, 1MB1613, 1MB1623, 1MB1633
4/52 • Frame sizes 100 L to 160 L
4/54 • Frame sizes 180 M to 315 L

© Siemens AG 2015

Overview



In many industrial and public sectors, explosion protection or explosion hazards are ever-present, e.g. in the chemicals industry, in refineries, on drilling platforms, at petrol stations, in feed manufacturing and in sewage treatment plants.

The risk of explosion is always present when gases, fumes, mist or dust are mixed with oxygen in the air in an explosive ratio close to sources of ignition that are able to release the so-called minimum ignition energy.

In the chemical and petrochemical industries in particular, when crude oil and natural gas are transported, or in mining, milling (e.g. grain and granular solids), this can result in serious injury to persons and damage to equipment.

To ensure maximum safety in these areas, legislators in most countries have implemented appropriate stipulations in the form of laws and regulations based on national and international standards.

Explosion-protected equipment is designed such that an explosion can be prevented when it is used properly.

The explosion-protected equipment can be designed in accordance with various types of protection.

The local conditions must be subdivided into specified zones by the user with the assistance of the responsible authorities in accordance with the frequency of occurrence of an explosion hazard. Device (equipment) categories are assigned to these zones. The zones are then subdivided into possible types of protection and therefore into possible equipment (product) types.

Classification of zones

Areas subject to explosion hazard are divided into zones. Division into zones depends on the chronological and geographical probability of the presence of a hazardous, potentially explosive atmosphere. Information and specifications for classification of the zones are laid down in the following standards:

- IEC/EN 60079-10-1 for gas atmospheres
- IEC/EN 60079-10-2 for dust atmospheres

Further, a distinction is made between various explosion groups as well as temperature classes and these are included in the hazard assessment.

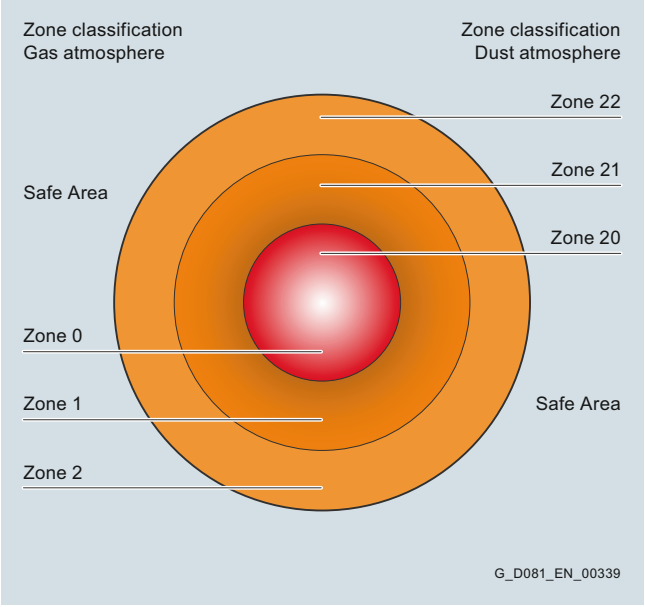

Depending on the particular zone and therefore the associated hazard, operating equipment must comply with defined minimum requirements regarding the type of protection. The different types of protection require corresponding measures to prevent ignition that should be implemented at the motor in order to prevent that a surrounding explosive atmosphere is ignited.

Zone		Zone definition acc. to			
Gas [1) 2)]	Dust [1) 2)]	IEC/EN 60079-10-1 for gas atmospheres IEC/EN 60079-10-2 for dust atmospheres	Assigned types of protection	Category according to 94/9/EC	Equipment protection level acc. to IEC/EN 60079-0
0	–	An area in which there is an explosive gas atmosphere **constantly, over a long period** or **frequently**.	Low voltage motors not permitted	1	Ga
1	–	An area in which it is expected that an explosive gas atmosphere will occur **occasionally** during normal operation.	Ex e Ex de Ex d	2	Gb
2	–	An area in which in normal operation it is expected that an explosive gas atmosphere will occur only **rarely** and then only **briefly**.	Ex nA	3	Gc
–	20	An area in which there is an explosive gas atmosphere comprising a dust-air mixture **constantly**, **over a long period** or **frequently**.	Low voltage motors not permitted	1	Da
–	21	An area in which it is expected that an explosive gas atmosphere comprising a dust-air mixture will occur **occasionally** during normal operation.	Ex tb	2	Db
–	22	An area in which in normal operation it is expected that an explosive gas atmosphere in the form of a cloud of flammable dust in air will occur only **rarely** and then only **briefly**.	Ex tc [3)]	3	Dc

1) Motors of
- Zone 1 can also be used in Zone 2
- Zone 21 can also be used in Zone 22

2) Motors which are certified for gas or dust protection must not be used in hybrid mixtures! Hybrid mixtures: when explosive gas and dust atmospheres occur simultaneously.

3) Motors are not approved for operation in environments containing conductive dust.

© Siemens AG 2015

Overview (continued)

Types of protection

Type of protection "Increased safety" **Ex e** acc. to IEC/EN 60079-7

Additional measures are taken to prevent the possibility of high temperatures and to prevent sparks or arcs from occurring on the inside and on external components of the motor.

Motors of the 1MA6 and 1MA7 series are designed with "Increased safety" – see Catalog D 81.1 · January 2012.

Type of protection "Explosion-proof enclosure" **Ex d** acc. to IEC/EN 60079-1

The components that can ignite an explosive atmosphere are located in an enclosure that is not damaged by an internal explosion and flameproof joints prevent flames from escaping to the explosive atmosphere on the outside.

The motors in series 1MD5 and 1PS5 are designed with "Explosion-proof enclosure" **Ex d** – see Catalog D 83.1.

Type of protection "Non-sparking" **Ex nA** acc. to IEC/EN 60079-15

The type of protection **Ex nA** ensures that a motor in normal operation as well as when operated under deviating conditions as specified in the standard is not in a position to ignite a surrounding explosive gas atmosphere.

1MB103, 1MB153 and 1MB163 motors are available in the **Ex nA** version. For motors of the 1LA7/9, 1LA6 and 1LG series, see Catalog D 81.1 · January 2012.

Type of protection "Dust explosion protection" **Ex tb, Ex tc** acc. to IEC/EN 60079-31

This type of protection applies for electrical equipment protected using an enclosure and with limited surface temperature for use in areas in which combustible dust can occur in concentration levels that could cause a fire or an explosion.

The following motor series are available with type of protection Ex tb or Ex tc:

- 1MB101, 1MB151 and 1MB161 with type of protection **Ex tb**
- 1MB102, 1MB152 and 1MB162 with type of protection **Ex tc**

For motors of the 1LA7/9, 1LA6 and 1LG series, see Catalog D 81.1 · January 2012.

Explosion-proof motors for converter operation

Principally, explosion-proof motors (except for Ex e) can be fed from converters. Particular attention must be paid to the interaction between the motor and converter system, especially with regard to the following aspects:

- The harmonic content of the supply voltage raises the motor temperature, so the motor output must be reduced
- Less cooling of the motor at speeds below the rated speed
- Voltage stress on the motor winding
- Bearing currents

Certification

IEC motors for use in hazardous zones are certified according to the EU Directive 94/9/EC (ATEX) and are marked according to the following schematic:

Example "Non-sparking":	**CE**	**0158**	**⟨Ex⟩**	**II**	**3**	**G**	**Ex**	**nA**	**IIC**	**T3**	**Gc**
CE marking											
Number of the certifying "notified" body (0158 = EXAM)											
Explosion protection marking											
Device group: I = Underground; II = All other areas											
Category: 2 (Zone 1/21); 3 (Zone 2/22)											
Ex atmosphere G = Gas; D = Dust											
Explosion protected equipment											
Type of protection nA, d, de, e, tb or tc (de = Ex d motor enclosure with Ex e terminal box)											
Explosion group and explosion subgroup: II = Gas (IIA, IIB or IIC); III = Dust (IIIA, IIIB or IIIC)											
Temperature class with max. surface temperature: T1 = 450 °C, T2 = 300 °C, T3 = 200 °C, T4 = 135 °C, T5 = 100 °C, T6 = 85 °C											
Equipment protection level (G = Gas; D = Dust): Ga = Very high protection, Gb = High protection, Gc = Increased protection, Da = Very high protection, Db = High protection, Dc = Increased protection											

Additional information on the subject of explosion protection, types of protection and zones is provided in the Siemens brochure "*Explosion Protection*".

© Siemens AG 2015

Overview (continued)

Overview of SIMOTICS XP 1MA/1MB1/1MJ/1LA/1LG/1PQ8 explosion-proof motors

The table below contains a complete overview of our products, their types of protection and the assignment of motor types to categories. It is important to note that depending on whether the motor is used for converter operation or line operation, different order codes are required for unique selection of the required product.

Sector	Category	Zone	Frequency of occurrence of the Ex atmosphere	Type of protection	Temperature class	Equipment protection level	Degree of protection	Motor type and if applicable order code	Operation	Order code	Utilization according to temperature class	Standard
Gases and vapors (G)	1G	0	constantly or long-term	Not admissible with low-voltage motors								
	2G	1	occasionally	Ex de IIC [1] (explosion-proof enclosure)	T1 – T4	Gb	IP55	1MD5, 1PS5	Line	–	130 (B)	IEC/EN 60079-0 IEC/EN 60079-1 IEC/EN 60079-7
									Converter	A15 A16	155 (F)	
				Ex e IIC [1] (increased safety)	T1 – T3	Gb	IP55	1MA6, 1MA7	Line	–	130 (B)/ 155 (F) [3]	IEC/EN 60079-0 IEC/EN 60079-7
	3G	2	rarely or briefly	Ex nA IIC [1] (non-sparking)	T1 – T3	Gc	IP55	1LA6, 1LA7, 1LA8, 1PQ8 [2], 1LA9, 1LG4/6	Line	M72	130 (B)	IEC/EN 60079-0 IEC/EN 60079-15
									Converter	M73		
								1MB103, 1MB153, 1MB163	Line			
Dust (D)	1D	20	constantly or long-term	Not admissible with low-voltage motors								
	2D	21	occasionally	Ex tb IIIC [1]: conductive and non-conductive dust	Max. enclosure temperature T125 °C [6]	Db	IP65	1LA5, 1LA6, 1LA7, 1LA8 [4], 1PQ8 [2], 1LA9, 1LG4/6	Line	M34	130 (B)	IEC/EN 60079-0 IEC/EN 60079-31
									Converter	M38		
	3D	22	rarely or briefly	Ex tc IIIB [1]: non-conductive dust		Dc	IP55		Line	M35		
									Converter	M39		
								1MB101/2, 1MB151/2, 1MB161/2	Line			
Gases and vapors (G) and dusts (D) [5]	2G 2D	1 or 21	occasionally	Ex de IIC [1] (explosion-proof enclosure)/ Ex tb IIIC [1]: conductive and non-conductive dust	T1 – T4/ Max. enclosure temperature T 135 °C	Gb Db	IP65	1MD5, 1PS5	Line	M76	130 (B)	IEC/EN 60079-0 IEC/EN 60079-1 IEC/EN 60079-31
									Converter	M77	155 (F)	
	3G 3D	2 or 22	rarely or briefly	Ex nA IIC [1] (non-sparking)/ Ex tc IIIB: non-conductive dust	T1 – T3/ Max. enclosure temperature T 125 °C [6]	Gc Dc	IP55	1LA6, 1LA7, 1LA9, 1LG4/6	Line	M74	130 (B)	IEC/EN 60079-0 IEC/EN 60079-15 IEC/EN 60079-31
									Converter	M75		
								1MB103 +B30 1MB153 +B30 1MB163 +B30	Line			

[1] Highest explosion group IIC includes IIB and IIA. IIIA stands for lint, IIIB for non-conductive dust and IIIC for conductive dust. 1MJ optionally with Ex d terminal box (order code **K53**).

[2] 1PQ8 is not possible for Zone 21. Zone 2 and 22 for 1PQ8 available on request. Utilization according to temperature class 155 (F).

[3] See EC type-examination certificate.

[4] 1LA8 only available for Zone 22 (order codes **M35**, **M39**). Converter: utilization as standard according to temperature class 155 (F)

[5] The Ex motor is not admissible in an explosive atmosphere of dust and air (hybrid). A standard is not currently available that describes the product requirements for a hybrid mixture.

[6] For 1MB1 IE1: T140 °C
IE2: T120 °C (except T130 °C for 1MB1.11-1AD5, 1MB1.11-3AD6, 1MB1.21-1AD5 and 1MB1.21-3AD6)
IE3: T120 °C

© Siemens AG 2015

Benefits

The explosion-proof motors offer the user numerous advantages:

- The motors are designed in accordance with Directive 94/9/EC (ATEX 95 previously ATEX 100a). As product supplier, Siemens accepts responsibility for compliance with the applicable product standards for the selected equipment.
- By using this product, the plant operating company satisfies Directive 1999/92/EC in accordance with Appendix II B (ATEX 137 previously ATEX 118a). The plant manufacturer or plant operating company is responsible for correct selection and proper usage of the equipment.
- Comprehensive series of Ex motors for protection against gas and dust.
- Individual versions of motors are possible thanks to the numerous catalog options.
- Further special versions are possible on request.
- Factory certificates 2.1 are available for a defined spectrum of Siemens motors/converters.
- The Operating Instructions (Compact) are available in all 23 official EU languages as well as Russian and Chinese.

For applications in harsh environments: SIMOTICS XP motors with a cast-iron housing

The right motor for various challenges

The following motor series are available with cast-iron housings for applications in harsh, hazardous environments:

- Basic Line: rugged, reliable motors for machine construction
- Performance Line: motors for the process industry with reinforced bearings and a rugged coating – for requirements that extend beyond the Basic Line

Comparison: Basic Line versus Performance Line

	Basic Line – 1MB15	Performance Line – 1MB16
Bearing size	62 (63 from frame size 280 upwards)	63
Relubrication	Optional (standard from frame size 280 upwards)	Standard from frame size 160 upwards (optional for frame size 100 to 132)
Paint system	Standard coating, corrosion class C2	Special coating, corrosion class C3
Motor protection	Optional	PTC
Warranty	12 months	36 months

Application

The explosion-proof motors are used in the following sectors to prevent explosion hazards that result in serious injury to persons and severe damage to equipment.

- Chemical and petrochemical industry
- Production of mineral oil and gas
- Gas works
- Gas supply companies
- Petrol stations
- Coking plants
- Mills (e.g. grain, solids)
- Sewage treatment plants
- Wood processing (e.g. sawdust, tree resin)
- Other industries subject to explosion hazards

© Siemens AG 2015

Technical specifications

General information

Ex motors in vertical type of construction with shaft extension pointing down must have a protective cover.

Operating Instructions (Compact) are supplied as standard with explosion-proof motors in English and German. Translations are also available in all the other official EU languages as well as in Russian and Chinese.

For all explosion-proof motors, designs according to UL and CSA are not possible.

Motor connection

Certified metric cable glands/sealing plugs are included in the scope of supply of 1MB1 motors.

The certificates for the motors for hazardous areas are stored with the documentation in the selection tool DT Configurator.

Certified motor protection switches/tripping units must always be used for motor protection, see Catalog IC 10.

Zone 1 with type of protection Ex e II increased safety "e"

See Catalog D 81.1 · January 2012.

Zone 1 with type of protection Ex de IIC explosion-proof enclosure "d"

See Catalog D 83.1.

Type of protection Ex nA for use in Zone 2

- Standard version for paint film thicknesses < 200 µm Ex nA IIC T3 Gc. For further information about paint and paint film thicknesses, see Chapter 1, from page 1/14 onwards.
- Optional version for paint film thicknesses > 200 µm to < 2 mm Ex nA IIB T3 Gc (order code **B31**). For further information about paint and paint film thicknesses, see Chapter 1, from page 1/14 onwards.
- For design for Zone 2 for converter operation [3], see Catalog D 81.1 · January 2012

1MB1, 1LA or 1LG motors are modified for this purpose in the "Non-sparking" design and are suitable for use in hazardous areas of Zone 2 for temperature classes T1 to T3. The maximum surface temperature that can occur during operation must lie below the limit temperature of the respective temperature class. The ventilation system must be in accordance with IEC/EN 60079-0. The motors are equipped with an external grounding terminal. The terminal box is similar to the Ex e design.

Please inquire in the case of:

- Utilization according to temperature class 155 (F)
- For pole-changing versions

For motors in the "Non-sparking" version, a conformity declaration is available from a recognized testing authority.

Ambient temperature –20 °C to +60 °C, whereby derating applies from 40 °C upwards. Other temperatures are available on request.

The rating plate or the extra rating plate contains the text:

Ⓔx II 3G Ex nA IIC T3 Gc

Number of the "Conformity statement"

Type of protection Ex tb IIIC and Ex tc IIIB for use in Zones 21 and 22

The distinction between Zones 21 and 22 is as follows:

- Ex tb IIIC acc. to IEC/EN 60079-31 [1] for Zone 21
  - Design for Zone 21 [2], as well as Zone 22 for conductive dust (IP65) for line operation (1MB101, 1MB151, 1MB161)
- Ex tc IIIB acc. to IEC/EN 60079-31 [1] for Zone 22
  - Version for Zone 22 for non-conductive dust (IP55) for line operation (1MB102, 1MB152, 1MB162)
- For design for Zone 21/22 for converter operation see Catalog D 81.1 · January 2012

The 1MB1 motors are modified for this purpose for use in zones subject to dust explosion hazards. The surface temperature is ≤ 120 °C [4] at rated duty.

An external grounding terminal and a metal external fan are fitted to the motors.

Pole-changing versions are not possible for Zone 21 – they are possible for Zone 22 on request.

Certification:

- Zone 21: EC type-examination certificate (ATEX) and EC Declaration of Conformity
- Zone 22: conformity declaration and EC Declaration of Conformity

Identification on the rating plate:

- Zone 21: Ⓔx II 2D Ex tb IIIC T120 °C Db [4]
- Zone 22: Ⓔx II 3D Ex tc IIIB T120 °C Dc [4]

Ambient temperature –20 °C to +60 °C, whereby derating applies from 40 °C upwards. Other temperatures are available on request.

Type of protection Ex nA/Ex tc for use in Zone 2/22

The motors must be ordered with:

- Design for Zone 2 and 22 for non-conductive dust for line operation – Order code **B30**

Zone 2/22: Ⓔx II 3G Ex nA IIC T3 Gc
Ⓔx II 3D Ex tc IIIB T120 °C Dc [4]

Converter operation

See Catalog D 81.1 · January 2012.

[1] Zone 21 only up to frame size 315 L.
[2] Zone 21 includes conductive and non-conductive dust.
[3] Not possible for 1MB1.
[4] IE1: T140 °C
IE2: T120 °C (except T130 °C for 1MB1.11-1AD5, 1MB1.11-3AD6, 1MB1.21-1AD5 and 1MB1.21-3AD6)
IE3: T120 °C

© Siemens AG 2015

Technical specifications (continued)

VIK version

VIK = Verband der Industriellen Energie- und Kraftwirtschaft e.V. (German Association of the Energy and Power Supply Industry)

- **VIK standard version** – 1LE1 + order code **C02**
  "VIK" identification on rating plate.
  ➔ Product spectrum catalog section 2.
- **VIK-Ex n version** – 1MB1.3 + order code **C02**
  "VIK" and "Ex nA IIC T3 Gc" marking on the rating plate according to Directive 94/9/EC (ATEX).
  ➔ Product spectrum in this catalog section.

Both versions include technology for Zone 2 to type of protection Ex nA IIC T3 Gc. Motors up to frame size 355 can be supplied in accordance with the technical requirements of the VIK recommendation.

Minimum efficiency class:

- VIK standard version:
  IE3 from 7.5 kW in accordance with legal requirements.
- VIK Ex n version:
  At least IE2 in accordance with March 2011 edition of VIK recommendation.

Notes:

- 8-pole motors or all motors < 0.75 kW are still possible as these motors are outside the output range specified for IE stamping.
- Please inquire about converter operation in all cases.
- Motors in VIK design with mounted technology (brake, rotary pulse encoder and separately driven fan) are not compatible with Zone 2. Designs for Zone 21/22 are not possible.
- VIK motors 1LA/1LG: See Catalog D 81.1 · January 2012.

Ex certification EAC for the Eurasian customs union (Russia, Belarus and Kazakhstan)

EAC = Eurasian Conformity

For the import and commissioning of explosion-proof motors in the Eurasian customs union, approval is required from a named Russian testing authority.

"Ex certificate EAC for the Eurasian customs union"
Order code **D35**

The explosion-proof motors in this catalog section all have Eurasian ex certification except for the following:

- 1MB10, frame sizes 80 and 90
- 1MB15/6, frame sizes 225 to 315, in type of protection Ex tb

When motors are ordered with order code **D35**, they are fitted with an extra rating plate displaying the logo "EAC Ex" and the Russian Ex marking.

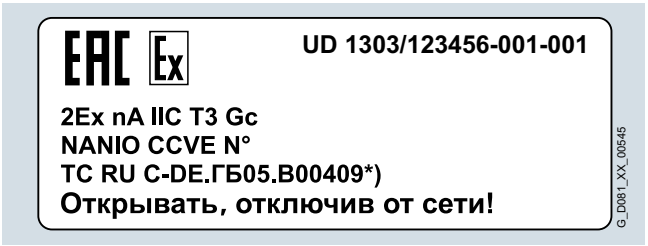

Example: Extra rating plate

The logo "EAC Ex" is also displayed on the packaging sticker. The motor must have an "EAC Ex certificate", although the certificate does not generally have to be shipped with the motor. The customs authorities use the motor article number to check the motor certification.
A copy of the EAC Ex certificate must be in the client's possession before the motor is commissioned.
The certificates are available in the SIOS (Siemens Industry Online Support) and the Drive Technology Configurator (DT Configurator).

Coolant temperature

Coolant temperature –40 to +40 °C for explosion-proof motor

For all 1MB10 motors, frame sizes 100 to 160 and 1MB15/6, frame sizes 100 to 315 in explosion protection types Ex nA or Ex t (Zone 21/22), the operating ambient temperature range can be optionally increased to –40 °C. Extensive technical measures are necessary in this case.

Order code **D03**

Order code **D03** is not possible in combination with order code **H02** "Vibration-proof version".

© Siemens AG 2015

Article number code

Selection and ordering data

The article number consists of a combination of digits and letters and is divided into three hyphenated blocks to provide a better overview, e.g.:
1MB1511-1DB22-2AB4-Z
R10

The first block (positions 1 to 7) identifies the motor type; the second block (positions 8 to 12) defines the motor frame size and length, the number of poles and in some cases the frequency/output; and in the third block (positions 13 to 16), the frequency/output, type of construction and other design features are encoded.

For deviations in the second and third block from the catalog codes, either **Z** or **90** should be used as appropriate.

Ordering data:

- Complete Article No. and order code(s) or plain text
- If a quotation has been requested, please specify the quotation number in addition to the Article No.
- When ordering a complete motor as a spare part, please specify the works serial No. for the previously supplied motor as well as the Article No.

Structure of the Article No.:			Position:	1	2	3	4	5	6	7	-	8	9	10	11	12	-	13	14	15	16	
Positions 1 to 4: Digit, letter, letter, digit	Explosion-proof – Self-ventilated by fan mounted on and driven by rotor			**1**	**M**	**B**	**1**															
Position 5: Digit	Aluminum housing							**0**														
	Cast-iron housing Basic Line							**5**														
	Cast-iron housing Performance Line							**6**														
Positions 6 to 7: 2 digits	Ex tb IIIC (Ex Zone 21)	Motors with IE2 High Efficiency							**1**	**1**												
		Motors with IE1 Standard Efficiency							**1**	**2**												
		Motors with IE3 Premium Efficiency							**1**	**3**												
	Ex tc IIIB (Ex Zone 22)	Motors with IE2 High Efficiency							**2**	**1**												
		Motors with IE1 Standard Efficiency							**2**	**2**												
		Motors with IE3 Premium Efficiency							**2**	**3**												
	Ex nA IIC T3 (Ex Zone 2)	Motors with IE2 High Efficiency							**3**	**1**												
		Motors with IE1 Standard Efficiency							**3**	**2**												
		Motors with IE3 Premium Efficiency							**3**	**3**												
Positions 8, 9 and 11: Digit, letter, digit	**Motor frame size** (frame size as a combination of shaft height and overall length, encoded)											**0** ... **3**	**A** ... **E**		**0** ... **6**							
Position 10: Letter	**No. of poles** A: 2-pole, B: 4-pole, C: 6-pole, D: 8-pole													**A** ... **D**								
Positions 12 and 13: 2 digits	**Voltage, circuit and frequency** (encoded with two digits, 9-0 requires order code M.. (e. g. M1Y))															**0** ... **9**		**0** ... **7**				
Position 14: Letter	**Type of construction** (encoded with A ... V)																		**A** ... **V**			
Position 15: Letter	**Motor protection** (encoded with A ... J)																			**A** ... **J**		
Position 16: Digit	**Terminal box position** 4: Terminal box top, 5: Terminal box right, 6: Terminal box left, 7: Terminal box below																				**4** ... **7**	
	Special order versions: encoded – additional order code required not encoded – additional plain text required																					**- Z**

Ordering example

Selection criteria	Requirement	Structure of the Article No.
Motor type 1MB1	Self-ventilated motor with explosion protection of type Ex tb IIIC (Ex Zone 21), cast-iron version, with IE2 High Efficiency, IP55 degree of protection	1MB1511-■■■■■-■■■■
Motor frame size/No. of poles/Speed	160 M/4-pole/1500 rpm	1MB1511-1DB2■-■■■■
Rated output	11 kW	
Voltage and frequency	230 VΔ/400 VY, 50 Hz	1MB1511-1DB22-2■■■
Type of construction with special version	IM B3	1MB1511-1DB22-2A■■
Motor protection	Motor protection with PTC thermistor with 3 embedded temperature sensors for tripping	1MB1511-1DB22-2AB■
Terminal box position	Terminal box at top	1MB1511-1DB22-2AB4
Special version	Rotation of the terminal box through 90°, entry from DE	1MB1511-1DB22-2AB4-Z R10

© Siemens AG 2015

Selection and ordering data

P_{rated}, 50 Hz	P_{rated}, 60 Hz	Frame size	Operating values at rated output: n_{rated}, 50 Hz	T_{rated}, 50 Hz	IE class		η_{rated}, 50 Hz, 4/4	η_{rated}, 50 Hz, 3/4	η_{rated}, 50 Hz, 2/4	cos φ_{rated}, 50 Hz, 4/4	I_{rated}, 50 Hz, 400 V	T_{LR}/T_{rated}	I_{LR}/I_{rated}	T_B/T_{rated}	L_{pfA}, 50 Hz	L_{WA}, 50 Hz	**Aluminum series** **1MB1** – *IE1 version in accordance with IEC 60034-30* Article No.	$m_{IM\ B3}$	J	Torque class
kW	kW	FS	rpm	Nm	50 Hz	60 Hz	%	%	%		A				dB(A)	dB(A)		kg	kgm²	CL
• Cooling: self-ventilated (IC411) • Efficiency: IE1 Standard Efficiency • Insulation: thermal class 155 (temperature class F), IP55 degree of protection, utilization in accordance with thermal class 130 (temperature class B)																				
2-pole: 3000 rpm at 50 Hz, 3600 rpm at 60 Hz [1]																				
3	**3.45**	**100 L**	2835	10	IE1	IE1	81.5	82	81	0.87	6.1	3.2	6.2	2.9	67	79	**1MB10■2-1AA4■-■■■■**	20	0.0034	16
4	**4.55**	**112 M**	2930	13	IE1	IE1	83.1	83.8	82.2	0.86	8.1	2.7	7.3	3.7	69	81	**1MB10■2-1BA2■-■■■■**	25	0.0067	16
5.5	**6.3**	**132 S**	2905	18	IE1	IE1	84.7	85.7	85	0.89	10.5	1.9	5.6	2.5	68	80	**1MB10■2-1CA0■-■■■■**	35	0.013	16
7.5	**8.6**	**132 S**	2925	24	IE1	IE1	86	86.9	85.8	0.87	14.5	2.1	6.3	3.2	68	80	**1MB10■2-1CA1■-■■■■**	40	0.016	16
11	**12.6**	**160 M**	2925	36	IE1	IE1	87.6	87.6	86.1	0.85	21.5	2	5.8	2.6	70	82	**1MB10■2-1DA2■-■■■■**	60	0.03	16
15	**17.3**	**160 M**	2930	49	IE1	IE1	88.7	89	88	0.84	29	2.5	6.1	3.1	70	82	**1MB10■2-1DA3■-■■■■**	68	0.036	16
18.5	**21.3**	**160 L**	2935	60	IE1	IE1	89.3	90	89.7	0.86	35	2.5	7	3.2	70	82	**1MB10■2-1DA4■-■■■■**	78	0.044	16
4-pole: 1500 rpm at 50 Hz, 1800 rpm at 60 Hz [1]																				
2.2	**2.55**	**100 L**	1425	15	IE1	IE1	79.7	80.5	78.5	0.81	4.9	2.2	5.1	2.3	60	72	**1MB10■2-1AB4■-■■■■**	18	0.0059	16
3	**3.45**	**100 L**	1425	20	IE1	IE1	81.5	83	82.3	0.85	6.3	2.4	5.4	2.6	60	72	**1MB10■2-1AB5■-■■■■**	22	0.0078	16
4	**4.55**	**112 M**	1435	27	IE1	IE1	83.1	84.5	84	0.85	8.2	2.2	5.3	2.6	58	70	**1MB10■2-1BB2■-■■■■**	27	0.010	16
5.5	**6.3**	**132 S**	1450	36	IE1	IE1	84.7	85.7	84.9	0.82	11.2	2.3	5.7	2.7	64	76	**1MB10■2-1CB0■-■■■■**	38	0.019	16
7.5	**8.6**	**132 M**	1450	49	IE1	IE1	86	86.9	86.3	0.82	15.2	2.6	6.6	3.1	64	76	**1MB10■2-1CB2■-■■■■**	44	0.024	16
11	**12.6**	**160 M**	1460	72	IE1	IE1	87.6	88	86.6	0.82	22	2.3	6.4	3.1	65	77	**1MB10■2-1DB2■-■■■■**	62	0.044	16
15	**17.3**	**160 L**	1460	98	IE1	IE1	88.7	89.3	88.3	0.82	30	2.5	7	3.4	65	77	**1MB10■2-1DB4■-■■■■**	73	0.056	16

Zones																				
Zone 21 (occasionally conductive and non-conductive dust) Ex tb IIIC																		1		
Zone 22 (rarely conductive or temporarily non-conductive dust) Ex tc IIIB																		2		
Zone 2 (rarely explosive or temporarily explosive gases) Ex nA IIC																		3		
Voltages					No. of poles	Frame size	Motor type	Version									Order code(s)			
50 Hz	230 VΔ/400 VY	60 Hz [1]	460 VY		2, 4	100 L ... 160 L	1MB10 . 2-1A ... -1D	**Standard**									–	2	2	
50 Hz	400 VΔ/690 VY	60 Hz [1]	460 VΔ		2, 4	100 L ... 160 L	1MB10 . 2-1A ... -1D	**Standard**									–	3	4	
50 Hz	500 VY				2, 4	100 L ... 160 L	1MB10 . 2-1A ... -1D	Without add. charge									–	2	7	
50 Hz	500 VΔ				2, 4	100 L ... 160 L	1MB10 . 2-1A ... -1D	Without add. charge									–	4	0	
Further voltages [1]					For price information, code numbers, order codes and descriptions, see from Page 4/21												. . .	9	0	
Types of construction					No. of poles	Frame size	Motor type	Version									Order code(s)			
Without flange		IM B3 [2]			2, 4	100 L ... 160 L	1MB10 . 2-1A ... -1D	**Standard**									–	A		
With flange		IM B5 [2]			2, 4	100 L ... 160 L	1MB10 . 2-1A ... -1D	With additional charge									–	F		
With standard flange		IM B14 [2]			2, 4	100 L ... 160 L	1MB10 . 2-1A ... -1D	With additional charge									–	K		
Further types of construction					For price information, code letters and descriptions, see from Page 4/23												. . .	■		
Motor protection					No. of poles	Frame size	Motor type	Version									Order code(s)			
Without					2, 4	100 L ... 160 L	1MB10 . 2-1A ... -1D	**Standard**									–	A		
PTC thermistor with 3 temperature sensors					2, 4	100 L ... 160 L	1MB10 . 2-1A ... -1D	With additional charge									–	B		
Further motor protection					For price information, code letters and descriptions, see from Page 4/27												. . .	■		
Terminal box position					No. of poles	Frame size	Motor type	Version									Order code(s)			
Terminal box at top					2, 4	100 L ... 160 L	1MB10 . 2-1A ... -1D	**Standard**									–			4
Further terminal box positions					For price information, code numbers and descriptions, see from Page 4/29															
Special versions					No. of poles	Frame size	Motor type										Order code(s)			
Options					For price information, order codes and descriptions, see from Page 4/31			**1MB10■2-. . . . ■-■■■■-Z**									. . .+. . .+. . .+. . .			

[1] Operating values at rated output for 60 Hz are stored in the Drive Technology (DT) Configurator.

[2] Types derived from IM B3 (IM B6/7/8, IM V6 and IM V5), from IM B5 (IM V3 and IM V1) and from IM B14 (IM V19 and IM V18) are possible, provided that no requirements exist for condensation drainage holes (**H03**) and stamping of the type on the rating plate. The basic type IM B3, IM B5 or IM B14 is stamped as standard on the rating plate. When ordering with condensation drainage holes (**H03**), the type must be specified.

© Siemens AG 2015

Selection and ordering data (continued)

P_{rated}, 50 Hz	P_{rated}, 60 Hz	Frame size	Operating values at rated output: n_{rated}, 50 Hz	T_{rated}, 50 Hz	IE class		η_{rated}, 50 Hz, 4/4	η_{rated}, 50 Hz, 3/4	η_{rated}, 50 Hz, 2/4	cos φ_{rated}, 50 Hz, 4/4	I_{rated}, 50 Hz, 400 V	T_{LR}/T_{rated}	I_{LR}/I_{rated}	T_B/T_{rated}	L_{pfA}, 50 Hz	L_{WA}, 50 Hz	**Aluminum series** **1MB1** – *IE1 version in accordance with IEC 60034-30* Article No.	$m_{IM\ B3}$	J	Torque class
kW	kW	FS	rpm	Nm	50 Hz	60 Hz	%	%	%		A				dB(A)	dB(A)		kg	kgm²	CL
• Cooling: self-ventilated (IC411) • Efficiency: IE1 Standard Efficiency • Insulation: thermal class 155 (temperature class F), IP55 degree of protection, utilization in accordance with thermal class 130 (temperature class B)																				
6-pole: 1000 rpm at 50 Hz, 1200 rpm at 60 Hz [1]																				
1.5	**1.75**	**100 L**	940	15	IE1	IE1	75.2	76	72.4	0.74	3.9	2	4	2.2	59	71	**1MB10■2-1AC4■-■■■■**	19	0.0065	16
2.2	**2.55**	**112 M**	930	23	IE1	IE1	77.7	78.8	76.9	0.75	5.4	2.3	4.1	2.5	57	69	**1MB10■2-1BC2■-■■■■**	25	0.0092	16
3	**3.45**	**132 S**	955	30	IE1	IE1	79.7	80.2	77.7	0.74	7.3	2	4.6	2.6	63	75	**1MB10■2-1CC0■-■■■■**	34	0.017	16
4	**4.55**	**132 M**	950	40	IE1	IE1	81.4	82.9	82.1	0.76	9.3	2.1	4.7	2.5	63	75	**1MB10■2-1CC2■-■■■■**	39	0.021	16
5.5	**6.3**	**132 M**	950	55	IE1	IE1	83.1	84.6	84	0.75	12.7	2.5	5.2	2.8	63	75	**1MB10■2-1CC3■-■■■■**	48	0.027	16
7.5	**8.6**	**160 M**	970	74	IE1	IE1	84.7	85.4	84	0.73	17.5	2.1	5.5	2.9	67	79	**1MB10■2-1DC2■-■■■■**	72	0.056	16
11	**12.6**	**160 L**	965	109	IE1	IE1	86.4	86.4	85.4	0.77	24	1.9	5.9	2.7	67	79	**1MB10■2-1DC4■-■■■■**	92	0.078	16
8-pole: 750 rpm at 50 Hz, 900 rpm at 60 Hz [1]																				
0.75	**0.86**	**100 L**	705	10.17	–	–	62.6	60.8	53.9	0.62	3.01	1.9	3	2.2	60	72	**1MB10■2-1AD4■-■■■■**	17	0.0056	16
1.1	**1.27**	**100 L**	705	15	–	–	65.5	64.2	60	0.63	3.85	2	3.2	2.3	60	72	**1MB10■2-1AD5■-■■■■**	22	0.0078	16
1.5	**1.75**	**112 M**	700	20	–	–	71.6	72.2	68.5	0.65	4.65	1.6	3.3	1.9	63	75	**1MB10■2-1BD2■-■■■■**	29	0.0094	13
2.2	**2.55**	**132 S**	715	29	–	–	76.8	77.4	75.2	0.66	6.3	1.7	3.9	2.4	63	75	**1MB10■2-1CD0■-■■■■**	37	0.019	13
3	**3.45**	**132 M**	710	40	–	–	76.6	77.8	75.8	0.66	8.6	1.8	3.9	2.2	63	75	**1MB10■2-1CD2■-■■■■**	44	0.024	13
4	**4.55**	**160 M**	720	53	–	–	78.3	78.5	75.6	0.69	10.7	1.7	3.8	2.3	63	75	**1MB10■2-1DD2■-■■■■**	60	0.044	13
5.5	**6.3**	**160 M**	720	73	–	–	81.7	82.5	81.4	0.7	13.9	1.6	4	2.2	63	75	**1MB10■2-1DD3■-■■■■**	72	0.056	13
7.5	**8.6**	**160 L**	715	100	–	–	83.5	84.5	83.6	0.7	18.5	1.7	3.8	2.2	63	75	**1MB10■2-1DD4■-■■■■**	91	0.077	13

Zones																				
Zone 21 (occasionally conductive and non-conductive dust) Ex tb IIIC																		1		
Zone 22 (rarely conductive or temporarily non-conductive dust) Ex tc IIIB																		2		
Zone 2 (rarely explosive or temporarily explosive gases) Ex nA IIC																		3		
Voltages					No. of poles	Frame size		Motor type			Version								Order code(s)	
50 Hz	230 VΔ/400 VY	60 Hz [1]	460 VY		6, 8	100 L ... 160 L		1MB10 . 2-1A ... -1D			**Standard**							2	2	–
50 Hz	400 VΔ/690 VY	60 Hz [1]	460 VΔ		6, 8	100 L ... 160 L		1MB10 . 2-1A ... -1D			**Standard**							3	4	–
50 Hz	500 VY				6, 8	100 L ... 160 L		1MB10 . 2-1A ... -1D			Without add. charge							2	7	–
50 Hz	500 VΔ				6, 8	100 L ... 160 L		1MB10 . 2-1A ... -1D			Without add. charge							4	0	–
Further voltages [1]					For price information, code numbers, order codes and descriptions, see from Page 4/21													9	0	. . .
Types of construction					No. of poles	Frame size		Motor type			Version								Order code(s)	
Without flange		IM B3 [2]			6, 8	100 L ... 160 L		1MB10 . 2-1A ... -1D			**Standard**								A	–
With flange		IM B5 [2]			6, 8	100 L ... 160 L		1MB10 . 2-1A ... -1D			With additional charge								F	–
With standard flange		IM B14 [2]			6, 8	100 L ... 160 L		1MB10 . 2-1A ... -1D			With additional charge								K	–
Further types of construction					For price information, code letters and descriptions, see from Page 4/23														■	. . .
Motor protection					No. of poles	Frame size		Motor type			Version								Order code(s)	
Without					6, 8	100 L ... 160 L		1MB10 . 2-1A ... -1D			**Standard**								A	–
PTC thermistor with 3 temperature sensors					6, 8	100 L ... 160 L		1MB10 . 2-1A ... -1D			With additional charge								B	–
Further motor protection					For price information, code letters and descriptions, see from Page 4/27														■	. . .
Terminal box position					No. of poles	Frame size		Motor type			Version								Order code(s)	
Terminal box at top					6, 8	100 L ... 160 L		1MB10 . 2-1A ... -1D			**Standard**									4 –
Further terminal box positions					For price information, code numbers and descriptions, see from Page 4/29															
Special versions					No. of poles	Frame size		Motor type											Order code(s)	
Options					For price information, order codes and descriptions, see from Page 4/31												**1MB10■2-. . . . ■-■■■■-Z**				. . .+. . .+. . .+. . .

[1] Operating values at rated output for 60 Hz are stored in the Drive Technology (DT) Configurator.

[2] Types derived from IM B3 (IM B6/7/8, IM V6 and IM V5), from IM B5 (IM V3 and IM V1) and from IM B14 (IM V19 and IM V18) are possible, provided that no requirements exist for condensation drainage holes (**H03**) and stamping of the type on the rating plate. The basic type IM B3, IM B5 or IM B14 is stamped as standard on the rating plate. When ordering with condensation drainage holes (**H03**), the type must be specified.

© Siemens AG 2015

Selection and ordering data (continued)

P_{rated}, 50 Hz	P_{rated}, 60 Hz	Frame size	Operating values at rated output: n_{rated}, 50 Hz	T_{rated}, 50 Hz	IE class		η_{rated}, 50 Hz, 4/4	η_{rated}, 50 Hz, 3/4	η_{rated}, 50 Hz, 2/4	cos φ_{rated}, 50 Hz, 4/4	I_{rated}, 50 Hz, 400 V	T_{LR}/T_{rated}	I_{LR}/I_{rated}	T_B/T_{rated}	L_{pfA}, 50 Hz	L_{WA}, 50 Hz	**Aluminum series 1MB1** – *IE2 version in accordance with IEC 60034-30* Article No.	$m_{IM\ B3}$	J	Torque class
kW	kW	FS	rpm	Nm	50 Hz	60 Hz	%	%	%		A				dB(A)	dB(A)		kg	kgm^2	CL
• Cooling: self-ventilated (IC411) • Efficiency: IE2 High Efficiency • Insulation: thermal class 155 (temperature class F), IP55 degree of protection, utilization in accordance with thermal class 130 (temperature class B)																				
2-pole: 3000 rpm at 50 Hz, 3600 rpm at 60 Hz [1]																				
0.75	**0.86**	**80 M**	2805	2.6	IE2	IE2	77.4	77.9	74.4	0.84	1.67	1.9	4.9	2.3	60	71	**1MB10■1-0DA2■-■■■■**	9	0.0008	16
1.1	**1.27**	**80 M**	2835	3.7	IE2	IE2	79.6	79.6	78.6	0.83	2.4	2.7	6	3.1	60	71	**1MB10■1-0DA3■-■■■■**	11	0.0011	16
1.5	**1.75**	**90 S**	2885	5	IE2	IE2	81.3	81.3	80.3	0.84	3.15	2.7	6.9	3.6	65	77	**1MB10■1-0EA0■-■■■■**	13	0.0017	16
2.2	**2.55**	**90 L**	2890	7.3	IE2	IE2	83.2	83.2	82.2	0.85	4.5	2.5	7.1	3.7	65	77	**1MB10■1-0EA4■-■■■■**	15	0.0021	16
3	**3.45**	**100 L**	2905	9.9	IE2	IE2	84.6	84.6	83.6	0.84	6.1	2.3	7	3.3	67	79	**1MB10■1-1AA4■-■■■■**	21	0.0044	16
4	**4.55**	**112 M**	2945	13	IE2	IE2	85.8	86.2	85.1	0.85	7.9	2.1	8	3.6	69	81	**1MB10■1-1BA2■-■■■■**	27	0.0092	16
5.5	**6.3**	**132 S**	2950	18	IE2	IE2	87	87	86	0.87	10.5	1.8	6.6	2.9	68	80	**1MB10■1-1CA0■-■■■■**	39	0.02	16
7.5	**8.6**	**132 S**	2950	24	IE2	IE2	88.1	88.1	87.1	0.87	14.1	2.2	7.5	3.1	68	80	**1MB10■1-1CA1■-■■■■**	43	0.024	16
11	**12.6**	**160 M**	2955	36	IE2	IE2	89.4	89.4	88.4	0.87	20.5	2.1	7.4	3.2	70	82	**1MB10■1-1DA2■-■■■■**	67	0.045	16
15	**17.3**	**160 M**	2955	48	IE2	IE2	90.3	90.3	89.3	0.88	27	2.4	7.6	3.4	70	82	**1MB10■1-1DA3■-■■■■**	75	0.053	16
18.5	**21.3**	**160 L**	2955	60	IE2	IE2	90.9	90.9	89.9	0.88	33.5	2.9	7.9	3.6	70	82	**1MB10■1-1DA4■-■■■■**	84	0.061	16
4-pole: 1500 rpm at 50 Hz, 1800 rpm at 60 Hz [1]																				
0.55	**0.63**	**80 M**	1440	3.6	–	–	78.1	78.6	75.6	0.74	1.37	2.2	5.3	3.1	53	64	**1MB10■1-0DB2■-■■■■**	10	0.0017	16
0.75	**0.86**	**80 M**	1440	5	IE2	IE2	79.6	79.6	78.6	0.76	1.79	2.2	5.6	3.1	53	64	**1MB10■1-0DB3■-■■■■**	11	0.0021	16
1.1	**1.27**	**90 S**	1425	7.4	IE2	IE2	81.4	81.4	80.4	0.78	2.5	2.3	5.6	2.9	56	68	**1MB10■1-0EB0■-■■■■**	13	0.0028	16
1.5	**1.75**	**90 L**	1435	10	IE2	IE2	82.8	82.8	81.8	0.79	3.3	2.6	6.4	3.4	56	68	**1MB10■1-0EB4■-■■■■**	16	0.0036	16
2.2	**2.55**	**100 L**	1455	14	IE2	IE2	84.3	84.3	83.3	0.81	4.65	2.1	6.9	3.3	60	72	**1MB10■1-1AB4■-■■■■**	21	0.0086	16
3	**3.45**	**100 L**	1455	20	IE2	IE2	85.5	85.5	84.5	0.82	6.2	2	6.9	3.1	60	72	**1MB10■1-1AB5■-■■■■**	25	0.011	16
4	**4.55**	**112 M**	1460	26	IE2	IE2	86.6	86.6	85.6	0.81	8.2	2.5	7.1	3.2	58	70	**1MB10■1-1BB2■-■■■■**	29	0.014	16
5.5	**6.3**	**132 S**	1465	36	IE2	IE2	87.7	87.7	86.7	0.8	11.3	2.3	6.9	2.9	64	76	**1MB10■1-1CB0■-■■■■**	42	0.027	16
7.5	**8.6**	**132 M**	1465	49	IE2	IE2	88.7	88.7	87.7	0.83	14.7	2.3	6.9	2.9	64	76	**1MB10■1-1CB2■-■■■■**	49	0.034	16
11	**12.6**	**160 M**	1470	71	IE2	IE2	89.8	89.8	88.8	0.85	21	2.1	6.7	2.8	65	77	**1MB10■1-1DB2■-■■■■**	71	0.065	16
15	**17.3**	**160 L**	1475	97	IE2	IE2	90.6	90.6	89.6	0.85	28	2.3	7.3	3	65	77	**1MB10■1-1DB4■-■■■■**	83	0.083	16

| **Zones** | | | | | | | | | | | | | | | | | | |

© Siemens AG 2015

Selection and ordering data (continued)

P_{rated}, 50 Hz	P_{rated}, 60 Hz	Frame size	Operating values at rated output: n_{rated}, 50 Hz	T_{rated}, 50 Hz	IE class		η_{rated}, 50 Hz, 4/4	η_{rated}, 50 Hz, 3/4	η_{rated}, 50 Hz, 2/4	cos φ_{rated}, 50 Hz, 4/4	I_{rated}, 50 Hz, 400 V	T_{LR}/T_{rated}	I_{LR}/I_{rated}	T_B/T_{rated}	L_{pfA}, 50 Hz	L_{WA}, 50 Hz	**Aluminum series 1MB1** – *IE2 version in accordance with IEC 60034-30* Article No.	$m_{IM\ B3}$	J	Torque class
kW	kW	FS	rpm	Nm	50 Hz	60 Hz	%	%	%		A				dB(A)	dB(A)		kg	kgm²	CL
• Cooling: self-ventilated (IC411) • Efficiency: IE2 High Efficiency • Insulation: thermal class 155 (temperature class F), IP55 degree of protection, utilization in accordance with thermal class 130 (temperature class B)																				
6-pole: 1000 rpm at 50 Hz, 1200 rpm at 60 Hz [1]																				
0.37	**0.43**	**80 M**	925	3.85	–	–	71.4	71.5	66.5	0.69	1.09	2.1	4	2.4	42	53	**1MB10■1-0DC2■-■■■■**	9	0.0017	16
0.55	**0.63**	**80 M**	935	5.6	–	–	74	74	70.5	0.66	1.63	2.5	4.4	2.9	42	53	**1MB10■1-0DC3■-■■■■**	12	0.0025	16
0.75	**0.86**	**90 S**	925	7.7	IE2	IE2	75.9	76	73	0.7	2.05	2	4.1	2.5	43	55	**1MB10■1-0EC0■-■■■■**	13	0.003	16
1.1	**1.27**	**90 L**	935	11	IE2	IE1	78.1	78.5	75	0.7	2.9	2.2	4.4	2.6	43	55	**1MB10■1-0EC4■-■■■■**	16	0.004	16
1.5	**1.75**	**100 L**	970	15	IE2	IE2	79.8	80.5	79	0.73	3.7	2	5.4	2.8	59	71	**1MB10■1-1AC4■-■■■■**	25	0.011	16
2.2	**2.55**	**112 M**	965	22	IE2	IE2	81.8	82.6	81.4	0.75	5.2	2	5	2.8	62	74	**1MB10■1-1BC2■-■■■■**	29	0.014	16
3	**3.45**	**132 S**	970	30	IE2	IE2	83.3	83.4	80.9	0.72	7.2	1.6	5	2.5	63	75	**1MB10■1-1CC0■-■■■■**	38	0.024	13
4	**4.55**	**132 M**	970	39	IE2	IE2	84.6	85.5	84.5	0.75	9.1	1.6	5	2.3	63	75	**1MB10■1-1CC2■-■■■■**	43	0.029	13
5.5	**6.3**	**132 M**	970	54	IE2	IE2	86	87	86.5	0.76	12.1	1.9	5.6	2.6	63	75	**1MB10■1-1CC3■-■■■■**	52	0.037	16
7.5	**8.6**	**160 M**	975	73	IE2	IE2	87.2	88	87.3	0.74	16.8	1.9	4.7	2.2	67	79	**1MB10■1-1DC2■-■■■■**	77	0.075	16
11	**12.6**	**160 L**	975	108	IE2	IE2	88.7	89.6	89.2	0.76	23.5	1.9	4.8	2.2	67	79	**1MB10■1-1DC4■-■■■■**	93	0.098	16
8-pole: 750 rpm at 50 Hz, 900 rpm at 60 Hz [1]																				
0.75	**0.86**	**100 L**	705	10	IE2	IE2	66.2	66.2	62	0.61	2.7	1.5	3.2	2.1	60	72	**1MB10■1-1AD4■-■■■■**	21	0.0086	13
1.1	**1.27**	**100 L**	695	15	IE2	IE2	70.8	72.3	70.2	0.65	3.45	1.4	3.2	1.9	60	72	**1MB10■1-1AD5■-■■■■**	25	0.011	13
1.5	**1.75**	**112 M**	725	20	IE2	IE2	74.1	74.1	71	0.63	4.65	1.6	4	2.4	63	75	**1MB10■1-1BD2■-■■■■**	34	0.017	13
2.2	**2.55**	**132 S**	725	29	IE2	IE2	77.6	78.2	76.6	0.62	6.6	1.4	3.5	2	63	75	**1MB10■1-1CD0■-■■■■**	46	0.034	10
3	**3.45**	**132 M**	720	40	IE2	IE1	80	80.7	79.2	0.62	8.7	1.4	3.7	2	63	75	**1MB10■1-1CD2■-■■■■**	52	0.037	10
4	**4.55**	**160 M**	730	52	IE2	IE2	81.9	82.6	81.7	0.67	10.5	1.6	3.7	1.9	63	75	**1MB10■1-1DD2■-■■■■**	69	0.065	13
5.5	**6.3**	**160 M**	730	72	IE2	IE2	83.8	84.3	83.1	0.67	14.1	1.7	3.9	2	63	75	**1MB10■1-1DD3■-■■■■**	82	0.083	13
7.5	**8.6**	**160 L**	725	99	IE2	IE2	85.3	86.5	86.1	0.7	18.1	1.6	3.8	1.9	63	75	**1MB10■1-1DD4■-■■■■**	94	0.098	13

| **Zones** | | | | | | | | | | | | | | | | | | |

© Siemens AG 2015

Selection and ordering data

P_{rated}, 50 Hz	P_{rated}, 60 Hz	Frame size	Operating values at rated output: n_{rated}, 50 Hz	T_{rated}, 50 Hz	IE class		η_{rated}, 50 Hz, 4/4	η_{rated}, 50 Hz, 3/4	η_{rated}, 50 Hz, 2/4	cos φ_{rated}, 50 Hz, 4/4	I_{rated}, 50 Hz, 400 V	T_{LR}/T_{rated}	I_{LR}/I_{rated}	T_B/T_{rated}	L_{pfA}, 50 Hz	L_{WA}, 50 Hz	**Cast-iron series** **1MB15.1** – *Basic Line* **1MB16.1** – *Performance Line* *IE2 version acc. to IEC 60034-30* Article No.	$m_{IM\ B3}$	J	Torque class
kW	kW	FS	rpm	Nm	50 Hz	60 Hz	%	%	%		A				dB(A)	dB(A)		kg	kgm²	CL
• Cooling: self-ventilated (IC411) • Efficiency: IE2 High Efficiency • Insulation: thermal class 155 (temperature class F), IP55 degree of protection, utilization in accordance with thermal class 130 (temperature class B)																				
2-pole: 3000 rpm at 50 Hz, 3600 rpm at 60 Hz [1]																				
3	**3.45**	**100 L**	2905	9.9	IE2	IE2	84.6	84.6	83.6	0.84	6.1	2.3	7	3.3	67	79	**1MB1■■1-1AA4■-■■■■**	32	0.0044	16
4	**4.55**	**112 M**	2945	13	IE2	IE2	85.8	86.2	85.1	0.85	7.9	2.1	8	3.6	69	81	**1MB1■■1-1BA2■-■■■■**	39	0.0092	16
5.5	**6.3**	**132 S**	2950	18	IE2	IE2	87	87	86	0.87	10.5	1.8	6.6	2.9	68	80	**1MB1■■1-1CA0■-■■■■**	57	0.02	16
7.5	**8.6**	**132 S**	2950	24	IE2	IE2	88.1	88.1	87.1	0.87	14.1	2.2	7.5	3.1	68	80	**1MB1■■1-1CA1■-■■■■**	61	0.024	16
11	**12.6**	**160 M**	2955	36	IE2	IE2	89.4	89.4	88.4	0.87	20.5	2.1	7.4	3.2	70	82	**1MB1■■1-1DA2■-■■■■**	96	0.045	16
15	**17.3**	**160 M**	2955	48	IE2	IE2	90.3	90.3	89.3	0.88	27	2.4	7.6	3.4	70	82	**1MB1■■1-1DA3■-■■■■**	104	0.053	16
18.5	**21.3**	**160 L**	2955	60	IE2	IE2	90.9	90.9	89.9	0.88	33.5	2.9	7.9	3.6	70	82	**1MB1■■1-1DA4■-■■■■**	113	0.061	16
22	**24.5**	**180 M**	2940	71	IE2	IE2	91.3	91.8	91.4	0.87	40	2.7	7.4	3.6	77	84	**1MB1■■1-1EA2■-■■■■**	145	0.069	16
30	**33.5**	**200 L**	2960	97	IE2	IE2	92	92.3	91.7	0.87	54	2.5	6.9	3.3	78	85	**1MB1■■1-2AA4■-■■■■**	200	0.13	16
37	**41.5**	**200 L**	2960	119	IE2	IE2	92.5	92.8	92.3	0.88	66	2.7	7.4	3.5	78	85	**1MB1■■1-2AA5■-■■■■**	225	0.15	16
45	**51**	**225 M**	2965	145	IE2	IE2	92.9	93.1	92.5	0.88	79	2.7	7.8	3.7	76	89	**1MB1■■1-2BA2■-■■■■**	295	0.23	16
55	**62**	**250 M**	2970	177	IE2	IE2	93.2	93.3	92.4	0.88	97	2.3	6.8	3.1	76	89	**1MB1■■1-2CA2■-■■■■**	360	0.4	13
75	**84**	**280 S**	2978	240	IE2	IE2	93.8	93.6	92.4	0.86	134	2.5	7.2	3.2	76	89	**1MB1■■1-2DA0■-■■■■**	490	0.71	13
90	**101**	**280 M**	2975	289	IE2	IE2	94.1	94.2	93.5	0.88	157	2.5	7.1	3.1	76	89	**1MB1■■1-2DA2■-■■■■**	530	0.83	13
110	**123**	**315 S**	2982	352	IE2	IE2	94.3	94.2	93.3	0.9	187	2.4	7.3	3	77	91	**1MB1■■1-3AA0■-■■■■**	720	1.3	13
132	**148**	**315 M**	2982	423	IE2	IE2	94.6	94.7	94.1	0.91	220	2.4	7.2	3.1	77	91	**1MB1■■1-3AA2■-■■■■**	880	1.6	13
160	**180**	**315 L**	2982	512	IE2	IE2	94.8	94.9	94.3	0.92	265	2.3	7	3.1	80	95	**1MB1■■1-3AA4■-■■■■**	930	1.8	13
200	**224**	**315 L**	2982	640	IE2	IE2	95	95.2	94.8	0.92	330	2.5	7.3	3	80	95	**1MB1■■1-3AA5■-■■■■**	1130	2.2	13

	Relubrication	Motor protection	Fan cover	Bearing size	Warranty	
Basic Line	Optional (standard from FS 280 upwards)	Optional	Steel	62 (63 from FS 280 upwards)	12 months	5
Performance Line	Standard from FS 160 (optional for FS 100 to 132)	Standard PTC	Steel	63	36 months	6

Zones	
Zone 21 (occasionally conductive and non-conductive dust) Ex tb IIIC	1
Zone 22 (rarely conductive or temporarily non-conductive dust) Ex tc IIIB	2
Zone 2 (rarely explosive or temporarily explosive gases) Ex nA IIC	3

Voltages [1]				No. of poles	Frame size	Motor type	Version			Order code(s)
50 Hz	230 VΔ/400 VY	60 Hz [2]	460 VY	2	100 L ... 315 L	1MB1■■1-1A ... -3A	**Standard**	2	2	–
50 Hz	400 VΔ/690 VY	60 Hz [2]	460 VΔ	2	100 L ... 315 L	1MB1■■1-1A ... -3A	**Standard**	3	4	–
50 Hz	500 VY			2	100 L ... 315 L	1MB1■■1-1A ... -3A	Without add. charge	2	7	–
50 Hz	500 VΔ			2	100 L ... 315 L	1MB1■■1-1A ... -3A	Without add. charge	4	0	–
Further voltages [2]		For price information, code numbers, code letters and descriptions, see from Page 4/22						9	0	. . .

Types of construction			No. of poles	Frame size	Motor type	Version		Order code(s)
Without flange	IM B3 [3]		2	100 L ... 315 L	1MB1■■1-1A ... -3A	**Standard**	A	–
With flange	IM B5 [3]		2	100 L ... 315 M	1MB1■■1-1A ... -3A	With add. charge	F	–
With standard flange	IM B14 [3]		2	100 L ... 160 L	1MB1■■1-1A ... -1D	With add. charge	K	–
Further types of construction		For price information, code letters and descriptions, see from Page 4/25					■	. . .

Motor protection	Line	No. of poles	Frame size	Motor type	Version		Order code(s)
Without	Only possible for **Basic Line**	2	100 L ... 315 L	1MB15■1-1A ... -3A	**Standard**	A	–
PTC thermistor with 3 temperature sensors	**Basic Line**	2	100 L ... 315 L	1MB15■1-1A ... -3A	With additional charge	B	–
	Performance Line	2	100 L ... 315 L	1MB16■1-1A ... -3A	**Standard**	B	–
Further motor protection	For price information, code letters and descriptions, see from Page 4/28					■	. . .

Terminal box position	No. of poles	Frame size	Motor type	Version		Order code(s)
Terminal box at top	2	100 L ... 315 L	1MB1■■1-1A ... -3A	**Standard**	4	–
Further terminal box positions	For price information, code numbers and descriptions, see from Page 4/30					

Special versions	No. of poles	Frame size	Motor type		Order code(s)
Options	For price information, order codes and descriptions, see from Page 4/34		**1MB1■■1-. . . .■-■■■■**	**-Z**	. . .+. . .+. . .+. . .

[1] Parallel supply lines are required in the case of connection to ≤ 240 V. For frame size 315 with connection to ≤ 240 V, due to the high current, a drilled, removable entry plate (Order code **R52**) or a larger terminal box (Order code **R50**) can be used. Order codes **R52** and **R50** alter the motor dimensions.

[2] Operating values at rated output for 60 Hz are stored in the Drive Technology (DT) Configurator.

[3] Types derived from IM B3 (IM B6/7/8, IM V6 and IM V5), from IM B5 (IM V3 and IM V1) and from IM B14 (IM V19 and IM V18) are possible, provided that no requirements exist for condensation drainage holes (**H03**) and stamping of the type on the rating plate. The basic type IM B3, IM B5 or IM B14 is stamped as standard on the rating plate. When ordering with condensation drainage holes (**H03**), the type must be specified.

© Siemens AG 2015

Selection and ordering data (continued)

P_{rated}, 50 Hz	P_{rated}, 60 Hz	Frame size	Operating values at rated output: n_{rated}, 50 Hz	T_{rated}, 50 Hz	IE class		η_{rated}, 50 Hz, 4/4	η_{rated}, 50 Hz, 3/4	η_{rated}, 50 Hz, 2/4	cos φ_{rated}, 50 Hz, 4/4	I_{rated}, 50 Hz, 400 V	T_{LR}/T_{rated}	I_{LR}/I_{rated}	T_B/T_{rated}	L_{pfA}, 50 Hz	L_{WA}, 50 Hz	Cast-iron series 1MB15.1 – *Basic Line* 1MB16.1 – *Performance Line* *IE2 version acc. to IEC 60034-30* Article No.	$m_{IM\ B3}$	J	Torque class
kW	kW	FS	rpm	Nm	50 Hz	60 Hz	%	%	%		A				dB(A)	dB(A)		kg	kgm^2	CL
• Cooling: self-ventilated (IC411) • Efficiency: IE2 High Efficiency • Insulation: thermal class 155 (temperature class F), IP55 degree of protection, utilization in accordance with thermal class 130 (temperature class B)																				
4-pole: 1500 rpm at 50 Hz, 1800 rpm at 60 Hz [1]																				
2.2	2.55	100 L	1455	14	IE2	IE2	84.3	84.3	83.3	0.81	4.65	2.1	6.9	3.3	60	72	1MB1■■1-1AB4■-■■■■	32	0.0086	16
3	3.45	100 L	1455	20	IE2	IE2	85.5	85.5	84.5	0.82	6.2	2	6.9	3.1	60	72	1MB1■■1-1AB5■-■■■■	37	0.011	16
4	4.55	112 M	1460	26	IE2	IE2	86.6	86.6	85.6	0.81	8.2	2.5	7.1	3.2	58	70	1MB1■■1-1BB2■-■■■■	46	0.014	16
5.5	6.3	132 S	1465	36	IE2	IE2	87.7	87.7	86.7	0.8	11.3	2.3	6.9	2.9	64	76	1MB1■■1-1CB0■-■■■■	61	0.027	16
7.5	8.6	132 M	1465	49	IE2	IE2	88.7	88.7	87.7	0.83	14.7	2.3	6.9	2.9	64	76	1MB1■■1-1CB2■-■■■■	75	0.034	16
11	12.6	160 M	1470	71	IE2	IE2	89.8	89.8	88.8	0.85	21	2.1	6.7	2.8	65	77	1MB1■■1-1DB2■-■■■■	96	0.065	16
15	17.3	160 L	1475	97	IE2	IE2	90.6	90.6	89.6	0.85	28	2.3	7.3	3	65	77	1MB1■■1-1DB4■-■■■■	104	0.083	16
18.5	21.3	180 M	1465	121	IE2	IE2	91.2	92	91.9	0.84	35	2.5	7.2	3.4	61	74	1MB1■■1-1EB2■-■■■■	160	0.12	16
22	25.3	180 L	1465	143	IE2	IE2	91.6	92.2	91.9	0.84	41.5	2.6	7.3	3.5	69	76	1MB1■■1-1EB4■-■■■■	170	0.13	16
30	34.5	200 L	1470	195	IE2	IE2	92.3	92.8	92.6	0.84	56	2.5	6.7	3.3	70	77	1MB1■■1-2AB5■-■■■■	230	0.2	16
37	42.5	225 S	1470	240	IE2	IE2	92.7	93.5	93.5	0.88	65	2.3	6.6	2.9	66	79	1MB1■■1-2BB0■-■■■■	280	0.42	16
45	52	225 M	1475	291	IE2	IE2	93.1	93.8	93.7	0.87	80	2.5	6.9	3.1	66	79	1MB1■■1-2BB2■-■■■■	305	0.46	16
55	63	250 M	1480	355	IE2	IE2	93.5	93.9	93.5	0.85	100	2.7	6.8	3	66	79	1MB1■■1-2CB2■-■■■■	385	0.75	16
75	86	280 S	1485	482	IE2	IE2	94	94.2	93.8	0.87	132	2.5	6.8	3	71	85	1MB1■■1-2DB0■-■■■■	550	1.3	16
90	104	280 M	1486	578	IE2	IE2	94.2	94.3	93.6	0.87	159	2.6	7.3	3.1	71	85	1MB1■■1-2DB2■-■■■■	570	1.4	16
110	127	315 S	1490	705	IE2	IE2	94.5	94.6	94	0.86	195	2.7	7.4	3	72	86	1MB1■■1-3AB0■-■■■■	740	2	16
132	152	315 M	1490	846	IE2	IE2	94.7	94.9	94.6	0.87	230	2.7	7.1	2.9	75	89	1MB1■■1-3AB2■-■■■■	870	2.3	16
160	184	315 L	1490	1025	IE2	IE2	94.9	95	94.5	0.87	280	2.8	7.2	3.1	76	91	1MB1■■1-3AB4■-■■■■	940	2.8	16
200	230	315 L	1490	1282	IE2	IE2	95.1	95.3	94.7	0.87	350	3.1	7.5	3.2	77	92	1MB1■■1-3AB5■-■■■■	1140	3.5	16

	Relubrication	Motor protection	Fan cover	Bearing size	Warranty		
Basic Line	Optional (standard from FS 280 upwards)	Optional	Steel	62 (63 from FS 280 upwards)	12 months	5	
Performance Line	Standard from FS 160 (optional for FS 100 to 132)	Standard PTC	Steel	63	36 months	6	

Zones	
Zone 21 (occasionally conductive and non-conductive dust) Ex tb IIIC	1
Zone 22 (rarely conductive or temporarily non-conductive dust) Ex tc IIIB	2
Zone 2 (rarely explosive or temporarily explosive gases) Ex nA IIC	3

Voltages [1]				No. of poles	Frame size	Motor type	Version			Order code(s)
50 Hz	230 VΔ/400 VY	60 Hz [2]	460 VY	4	100 L ... 315 L	1MB1■■1-1A … -3A	**Standard**	2	2	–
50 Hz	400 VΔ/690 VY	60 Hz [2]	460 VΔ	4	100 L ... 315 L	1MB1■■1-1A … -3A	**Standard**	3	4	–
50 Hz	500 VY			4	100 L ... 315 L	1MB1■■1-1A … -3A	Without add. charge	2	7	–
50 Hz	500 VΔ			4	100 L ... 315 L	1MB1■■1-1A … -3A	Without add. charge	4	0	–
Further voltages [2]		For price information, code numbers, order codes and descriptions, see from Page 4/22						9	0	. . .

Types of construction		No. of poles	Frame size	Motor type	Version		Order code(s)
Without flange	IM B3 [3]	4	100 L ... 315 L	1MB1■■1-1A … -3A	**Standard**	A	–
With flange	IM B5 [3]	4	100 L ... 315 M	1MB1■■1-1A … -3A	With add. charge	F	–
With standard flange	IM B14 [3]	4	100 L ... 160 L	1MB1■■1-1A … -1D	With add. charge	K	–
Further types of construction	For price information, code letters and descriptions, see from Page 4/25					■	. . .

Motor protection	Line	No. of poles	Frame size	Motor type	Version		Order code(s)
Without	Only possible for **Basic Line**	4	100 L ... 315 L	1MB15■1-1A … -3A	**Standard**	A	–
TC thermistor with 3 temperature sensors	**Basic Line**	4	100 L ... 315 L	1MB15■1-1A … -3A	With additional charge	B	–
	Performance Line	4	100 L ... 315 L	1MB16■1-1A … -3A	**Standard**	B	–
Further motor protection	For price information, code letters and descriptions, see from Page 4/28					■	. . .

Terminal box position	No. of poles	Frame size	Motor type	Version		Order code(s)
Terminal box at top	4	100 L ... 315 L	1MB1■■1-1A … -3A	**Standard**	4	–
Further terminal box positions	For price information, code numbers and descriptions, see from Page 4/30					

Special versions	No. of poles	Frame size	Motor type		Order code(s)
Options	For price information, order codes and descriptions, see from Page 4/34		1MB1■■1-. . . .	■-■■■■-Z	. . .+. . .+. . .+. . .

1) Parallel supply lines are required in the case of connection to ≤ 240 V. For frame size 315 with connection to ≤ 240 V, due to the high current, a drilled, removable entry plate (Order code **R52**) or a larger terminal box (Order code **R50**) can be used. Order codes **R52** and **R50** alter the motor dimensions.

2) Operating values at rated output for 60 Hz are stored in the Drive Technology (DT) Configurator.

3) Types derived from IM B3 (IM B6/7/8, IM V6 and IM V5), from IM B5 (IM V3 and IM V1) and from IM B14 (IM V19 and IM V18) are possible, provided that no requirements exist for condensation drainage holes (**H03**) and stamping of the type on the rating plate. The basic type IM B3, IM B5 or IM B14 is stamped as standard on the rating plate. When ordering with condensation drainage holes (**H03**), the type must be specified.

© Siemens AG 2015

Selection and ordering data (continued)

P_{rated}, 50 Hz	P_{rated}, 60 Hz	Frame size	Operating values at rated output: n_{rated},	T_{rated},	IE class		η_{rated}, 50 Hz, 4/4	η_{rated}, 50 Hz, 3/4	η_{rated}, 50 Hz, 2/4	cos φ_{rated}, 50 Hz, 4/4	I_{rated}, 50 Hz, 400 V	T_{LR}/T_{rated}	I_{LR}/I_{rated}	T_B/T_{rated}	L_{pfA}, 50 Hz	L_{WA}, 50 Hz	Cast-iron series **1MB15.1** – *Basic Line* **1MB16.1** – *Performance Line* *IE2 version acc. to IEC 60034-30* Article No.	$m_{IM\ B3}$	J	Torque class
kW	kW	FS	rpm	Nm	50 Hz	60 Hz	%	%	%		A				dB(A)	dB(A)		kg	kgm^2	CL
• Cooling: self-ventilated (IC411) • Efficiency: IE2 High Efficiency • Insulation: thermal class 155 (temperature class F), IP55 degree of protection, utilization in accordance with thermal class 130 (temperature class B)																				
6-pole: 1000 rpm at 50 Hz, 1200 rpm at 60 Hz [1]																				
1.5	1.75	100 L	970	15	IE2	IE2	79.8	80.5	79	0.73	3.7	2	5.4	2.8	59	71	1MB1■■1-1AC4■-■■■■	36	0.011	16
2.2	2.55	112 M	965	22	IE2	IE2	81.8	82.6	81.4	0.75	5.2	2	5	2.8	62	74	1MB1■■1-1BC2■-■■■■	41	0.014	16
3	3.45	132 S	970	30	IE2	IE2	83.3	83.4	80.9	0.72	7.2	1.6	5	2.5	63	75	1MB1■■1-1CC0■-■■■■	56	0.024	13
4	4.55	132 M	970	39	IE2	IE2	84.6	85.5	84.5	0.75	9.1	1.6	5	2.3	63	75	1MB1■■1-1CC2■-■■■■	61	0.029	13
5.5	6.3	132 M	970	54	IE2	IE2	86	87	86.5	0.76	12.1	1.9	5.6	2.6	63	75	1MB1■■1-1CC3■-■■■■	70	0.037	16
7.5	8.6	160 M	975	73	IE2	IE2	87.2	88	87.3	0.74	16.8	1.9	4.7	2.2	67	79	1MB1■■1-1DC2■-■■■■	106	0.075	16
11	12.6	160 L	975	108	IE2	IE2	88.7	89.6	89.2	0.76	23.5	1.9	4.8	2.2	67	79	1MB1■■1-1DC4■-■■■■	122	0.098	16
15	18	180 L	975	147	IE2	IE2	89.7	90.1	89.5	0.78	31	2.5	6	3.1	63	70	1MB1■■1-1EC4■-■■■■	155	0.17	16
18.5	22	200 L	978	181	IE2	IE1	90.4	91.3	91.2	0.82	36	2.4	5.8	2.6	66	73	1MB1■■1-2AC4■-■■■■	200	0.25	16
22	26.5	200 L	978	215	IE2	IE1	90.9	91.6	91.2	0.82	42.5	2.5	6.2	2.6	65	72	1MB1■■1-2AC5■-■■■■	220	0.3	16
30	36	225 M	980	292	IE2	IE1	91.7	92.5	92.3	0.83	57	2.5	5.6	2.7	65	78	1MB1■■1-2BC2■-■■■■	300	0.58	16
37	44.5	250 M	982	360	IE2	IE1	92.2	93.1	93.1	0.83	70	2.8	6	2.5	62	77	1MB1■■1-2CC2■-■■■■	370	0.86	16
45	54	280 S	985	436	IE2	IE1	92.7	93.4	93.2	0.84	83	2.7	6.3	2.6	65	79	1MB1■■1-2DC0■-■■■■	460	1.1	16
55	66	280 M	985	533	IE2	IE1	93.1	93.9	94	0.86	99	2.5	6.4	2.6	65	79	1MB1■■1-2DC2■-■■■■	510	1.37	16
75	90	315 S	988	725	IE2	IE1	93.7	94	93.6	0.84	138	2.5	6.7	2.8	65	79	1MB1■■1-3AC0■-■■■■	660	2.1	16
90	108	315 M	988	870	IE2	IE1	94	94.3	93.6	0.84	165	2.6	6.9	2.8	65	79	1MB1■■1-3AC2■-■■■■	730	2.5	16
110	132	315 L	988	1063	IE2	IE1	94.3	94.6	94.5	0.86	196	2.7	7	2.8	68	82	1MB1■■1-3AC4■-■■■■	940	3.6	16
132	158	315 L	988	1276	IE2	IE2	94.6	94.9	94.7	0.86	235	3	7.5	2.9	69	84	1MB1■■1-3AC5■-■■■■	990	4.02	16
160	192	315 L	988	1546	IE2	IE2	94.8	94.7	94.4	0.86	285	3.1	7.7	3.3	69	84	1MB1■■1-3AC6■-■■■■	1160	4.7	16

	Relubrication	Motor protection	Fan cover	Bearing size	Warranty		
Basic Line	Optional (standard from FS 280 upwards)	Optional	Steel	62 (63 from FS 280 upwards)	12 months	5	
Performance Line	Standard from FS 160 (optional for FS 100 to 132)	Standard PTC	Steel	63	36 months	6	

Zones	
Zone 21 (occasionally conductive and non-conductive dust) Ex tb IIIC	1
Zone 22 (rarely conductive or temporarily non-conductive dust) Ex tc IIIB	2
Zone 2 (rarely explosive or temporarily explosive gases) Ex nA IIC	3

Voltages [1]				No. of poles	Frame size	Motor type	Version			Order code(s)
50 Hz	230 VΔ/400 VY	60 Hz [2]	460 VY	6	100 L ... 315 L	1MB1■■1-1A ... -3A	**Standard**	2	2	–
50 Hz	400 VΔ/690 VY	60 Hz [2]	460 VΔ	6	100 L ... 315 L	1MB1■■1-1A ... -3A	**Standard**	3	4	–
50 Hz	500 VY			6	100 L ... 315 L	1MB1■■1-1A ... -3A	Without add. charge	2	7	–
50 Hz	500 VΔ			6	100 L ... 315 L	1MB1■■1-1A ... -3A	Without add. charge	4	0	–
Further voltages [2]		For price information, code numbers, code letters and descriptions, see from Page 4/22						9	0	...

Types of construction			No. of poles	Frame size	Motor type	Version		Order code(s)
Without flange	IM B3 [2]		6	100 L ... 315 L	1MB1■■1-1A ... -3A	**Standard**	A	–
With flange	IM B5 [2]		6	100 L ... 315 M	1MB1■■1-1A ... -3A	With add. charge	F	–
With standard flange	IM B14 [2]		6	100 L ... 160 L	1MB1■■1-1A ... -1D	With add. charge	K	–
Further types of construction		For price information, code letters and descriptions, see from Page 4/25					■	...

Motor protection	Line	No. of poles	Frame size	Motor type	Version		Order code(s)
Without	Only possible for **Basic Line**	6	100 L ... 315 L	1MB15■1-1A ... -3A	**Standard**	A	–
PTC thermistor with 3 temperature sensors	**Basic Line**	6	100 L ... 315 L	1MB15■1-1A ... -3A	With additional charge	B	–
	Performance Line	6	100 L ... 315 L	1MB16■1-1A ... -3A	**Standard**	B	–
Further motor protection	For price information, code letters and descriptions, see from Page 4/28					■	...

Terminal box position	No. of poles	Frame size	Motor type	Version		Order code(s)
Terminal box at top	6	100 L ... 315 L	1MB1■■1-1A ... -3A	**Standard**	4	–
Further terminal box positions	For price information, code numbers and descriptions, see from Page 4/30					

Special versions	No. of poles	Frame size	Motor type		Order code(s)
Options	For price information, order codes and descriptions, see from Page 4/34		1MB1■■1-.... ■-■■■■	-Z	...+...+...+...

1) Parallel supply lines are required in the case of connection to ≤ 240 V. For frame size 315 with connection to ≤ 240 V, due to the high current, a drilled, removable entry plate (Order code **R52**) or a larger terminal box (Order code **R50**) can be used. Order codes **R52** and **R50** alter the motor dimensions.

2) Operating values at rated output for 60 Hz are stored in the Drive Technology (DT) Configurator.

3) Types derived from IM B3 (IM B6/7/8, IM V6 and IM V5), from IM B5 (IM V3 and IM V1) and from IM B14 (IM V19 and IM V18) are possible, provided that no requirements exist for condensation drainage holes (**H03**) and stamping of the type on the rating plate. The basic type IM B3, IM B5 or IM B14 is stamped as standard on the rating plate. When ordering with condensation drainage holes (**H03**), the type must be specified.

© Siemens AG 2015

Selection and ordering data (continued)

Operating values at rated output																	Cast-iron series **1MB15.1** – *Basic Line* **1MB16.1** – *Performance Line* *IE2 version acc. to IEC 60034-30* Article No.	$m_{IM\ B3}$	J	Torque class
P_{rated}, 50 Hz	P_{rated}, 60 Hz	Frame size	n_{rated}, 50 Hz	T_{rated}, 50 Hz	IE class		η_{rated}, 50 Hz, 4/4	η_{rated}, 50 Hz, 3/4	η_{rated}, 50 Hz, 2/4	cos φ_{rated}, 50 Hz, 4/4	I_{rated}, 50 Hz, 400 V	T_{LR}/T_{rated}	I_{LR}/I_{rated}	T_B/T_{rated}	L_{pfA}, 50 Hz	L_{WA}, 50 Hz				
kW	kW	FS	rpm	Nm	50 Hz	60 Hz	%	%	%		A				dB(A)	dB(A)		kg	kgm²	CL
• **Cooling: self-ventilated (IC411)** • **Efficiency: IE2 High Efficiency** • **Insulation: thermal class 155 (temperature class F), IP55 degree of protection, utilization in accordance with thermal class 130 (temperature class B)**																				
8-pole: 750 rpm at 50 Hz, 900 rpm at 60 Hz [1]																				
0.75	**0.86**	**100 L**	705	10	IE2	IE2	66.2	66.2	62	0.61	2.7	1.5	3.2	2.1	60	72	**1MB1■■1-1AD4■-■■■■**	32	0.0086	13
1.1	**1.27**	**100 L**	695	15	IE2	IE2	70.8	72.3	70.2	0.65	3.45	1.4	3.2	1.9	60	72	**1MB1■■1-1AD5■-■■■■**	36	0.011	13
1.5	**1.75**	**112 M**	725	20	IE2	IE2	74.1	74.1	71	0.63	4.65	1.6	4	2.4	63	75	**1MB1■■1-1BD2■-■■■■**	53	0.017	13
2.2	**2.55**	**132 S**	725	29	IE2	IE2	77.6	78.2	76.6	0.62	6.6	1.4	3.5	2	63	75	**1MB1■■1-1CD0■-■■■■**	64	0.034	10
3	**3.45**	**132 M**	720	40	IE2	IE1	80	80.7	79.2	0.62	8.7	1.4	3.7	2	63	75	**1MB1■■1-1CD2■-■■■■**	67	0.037	10
4	**4.55**	**160 M**	730	52	IE2	IE2	81.9	82.6	81.7	0.67	10.5	1.6	3.7	1.9	63	75	**1MB1■■1-1DD2■-■■■■**	98	0.065	13
5.5	**6.3**	**160 M**	730	72	IE2	IE2	83.8	84.3	83.1	0.67	14.1	1.7	3.9	2	63	75	**1MB1■■1-1DD3■-■■■■**	111	0.083	13
7.5	**8.6**	**160 L**	725	99	IE2	IE2	85.3	86.5	86.1	0.7	18.1	1.6	3.8	1.9	63	75	**1MB1■■1-1DD4■-■■■■**	123	0.098	13
11	**13.2**	**180 L**	720	146	–	–	86.6	87.6	87.1	0.7	26	2.3	4.9	2.6	72	80	**1MB1■■1-1ED4■-■■■■**	155	0.195	13
15	**18**	**200 L**	718	200	–	–	88.9	90.8	91.2	0.76	32	2.4	5.4	2.8	58	65	**1MB1■■1-2AD5■-■■■■**	220	0.344	13
18.5	**22**	**225 S**	730	242	–	–	89	89.9	89.5	0.78	38.5	2.2	5.4	2.7	59	72	**1MB1■■1-2BD0■-■■■■**	250	0.43	13
22	**26.5**	**225 M**	730	288	–	–	90.3	91.3	91.1	0.8	44	2.3	5.5	2.7	58	71	**1MB1■■1-2BD2■-■■■■**	270	0.5	13
30	**36**	**250 M**	732	391	–	–	91.3	92.2	92	0.8	59	2.4	5.6	2.7	60	73	**1MB1■■1-2CD2■-■■■■**	370	0.86	13
37	**44.5**	**280 S**	736	480	–	–	91.9	92.5	92.1	0.78	75	2.3	5.4	2.4	63	77	**1MB1■■1-2DD0■-■■■■**	460	1.1	13
45	**54**	**280 M**	738	582	–	–	92.4	92.8	92.4	0.79	89	2.5	5.7	2.5	66	80	**1MB1■■1-2DD2■-■■■■**	510	1.4	13
55	**66**	**315 S**	740	710	–	–	92.9	93.3	92.9	0.8	107	2.2	5.8	2.6	69	83	**1MB1■■1-3AD0■-■■■■**	640	2	13
75	**90**	**315 M**	738	971	–	–	93.5	94.4	94.5	0.81	143	2.3	5.9	2.7	69	84	**1MB1■■1-3AD2■-■■■■**	720	2.5	13
90	**108**	**315 L**	740	1161	–	–	93.5	94.3	94.4	0.83	167	2.2	5.8	2.5	69	84	**1MB1■■1-3AD4■-■■■■**	860	3.1	13
110	**132**	**315 L**	740	1419	–	–	94.2	95	95.1	0.82	205	2.7	6.7	2.9	74	88	**1MB1■■1-3AD5■-■■■■**	980	3.9	13
132	**158**	**315 L**	740	1703	–	–	94.4	94.8	94.4	0.81	250	2.9	7.2	3.3	76	90	**1MB1■■1-3AD6■-■■■■**	1070	4.5	16

	Relubrication	Motor protection	Fan cover	Bearing size	Warranty	
Basic Line	Optional (standard from FS 280 upwards)	Optional	Steel	62 (63 from FS 280 upwards)	12 months	5
Performance Line	Standard from FS 160 (optional for FS 100 to 132)	Standard PTC	Steel	63	36 months	6

Zones	
Zone 21 (occasionally conductive and non-conductive dust) Ex tb IIIC	1
Zone 22 (rarely conductive or temporarily non-conductive dust) Ex tc IIIB	2
Zone 2 (rarely explosive or temporarily explosive gases) Ex nA IIC	3

Voltages [1]				No. of poles	Frame size	Motor type	Version			Order code(s)
50 Hz	230 VΔ/400 VY	60 Hz [2]	460 VY	8	100 L ... 315 L	1MB1■■1-1A ... -3A	**Standard**	2	2	–
50 Hz	400 VΔ/690 VY	60 Hz [2]	460 VΔ	8	100 L ... 315 L	1MB1■■1-1A ... -3A	**Standard**	3	4	–
50 Hz	500 VY			8	100 L ... 315 L	1MB1■■1-1A ... -3A	Without add. charge	2	7	–
50 Hz	500 VΔ			8	100 L ... 315 L	1MB1■■1-1A ... -3A	Without add. charge	4	0	–
Further voltages [2]		For price information, code numbers, code letters and descriptions, see from Page 4/22						9	0	. . .

Types of construction			No. of poles	Frame size	Motor type	Version		Order code(s)
Without flange	IM B3 [3]		8	100 L ... 315 L	1MB1■■1-1A ... -3A	**Standard**	A	–
With flange	IM B5 [3]		8	100 L ... 315 M	1MB1■■1-1A ... -3A	With add. charge	F	–
With standard flange	IM B14 [3]		8	100 L ... 160 L	1MB1■■1-1A ... -1D	With add. charge	K	–
Further types of construction		For price information, code letters and descriptions, see from Page 4/25					■	. . .

Motor protection	Line	No. of poles	Frame size	Motor type	Version		Order code(s)
Without	Only possible for **Basic Line**	8	100 L ... 315 L	1MB15■1-1A ... -3A	**Standard**	A	–
PTC thermistor with 3 temperature sensors	**Basic Line**	8	100 L ... 315 L	1MB15■1-1A ... -3A	With additional charge	B	–
	Performance Line	8	100 L ... 315 L	1MB16■1-1A ... -3A	**Standard**	B	–
Further motor protection	For price information, code letters and descriptions, see from Page 4/28					■	. . .

Terminal box position	No. of poles	Frame size	Motor type	Version		Order code(s)
Terminal box at top	8	100 L ... 315 L	1MB1■■1-1A ... -3A	**Standard**	4	–
Further terminal box positions	For price information, code numbers and descriptions, see from Page 4/30					

Special versions	No. of poles	Frame size	Motor type	Order code(s)
Options	For price information, order codes and descriptions, see from Page 4/34		**1MB1■■1-. . . . ■-■■■■-Z**	. . .+. . .+. . .+. . .

[1] Parallel supply lines are required in the case of connection to ≤ 240 V. For frame size 315 with connection to ≤ 240 V, due to the high current, a drilled, removable entry plate (Order code **R52**) or a larger terminal box (Order code **R50**) can be used. Order codes **R52** and **R50** alter the motor dimensions.

[2] Operating values at rated output for 60 Hz are stored in the Drive Technology (DT) Configurator.

[3] Types derived from IM B3 (IM B6/7/8, IM V6 and IM V5), from IM B5 (IM V3 and IM V1) and from IM B14 (IM V19 and IM V18) are possible, provided that no requirements exist for condensation drainage holes (**H03**) and stamping of the type on the rating plate. The basic type IM B3, IM B5 or IM B14 is stamped as standard on the rating plate. When ordering with condensation drainage holes (**H03**), the type must be specified.

© Siemens AG 2015

Selection and ordering data

P_{rated}, 50 Hz	P_{rated}, 60 Hz	Frame size	Operating values at rated output: n_{rated}, 50 Hz	T_{rated}, 50 Hz	IE class		η_{rated}, 50 Hz, 4/4	η_{rated}, 50 Hz, 3/4	η_{rated}, 50 Hz, 2/4	cos φ_{rated}, 50 Hz, 4/4	I_{rated}, 50 Hz, 400 V	T_{LR}/T_{rated}	I_{LR}/I_{rated}	T_B/T_{rated}	L_{pfA}, 50 Hz	L_{WA}, 50 Hz	**Aluminum series** **1MB1** – *IE3 version in accordance with IEC 60034-30* Article No.	$m_{IM\ B3}$	J	Torque class
kW	kW	FS	rpm	Nm	50 Hz	60 Hz	%	%	%		A				dB(A)	dB(A)		kg	kgm²	CL
• **Cooling: self-ventilated (IC411)** • **Efficiency: IE3 Premium Efficiency** • **Insulation: thermal class 155 (temperature class F), IP55 degree of protection, utilization in accordance with thermal class 130 (temperature class B)**																				
2-pole: 3000 rpm at 50 Hz, 3600 rpm at 60 Hz [1]																				
0.75	**0.86**	**80 M**	2850	2.5	IE3	IE3	80.7	82	81.5	0.86	1.56	2.6	6.2	3	60	71	**1MB10■3-0DA2■-■■■■**	11	0.0011	16
1.1	**1.27**	**80 M**	2885	3.6	IE3	IE3	82.7	82.7	81.7	0.85	2.25	2.8	7.4	3.8	60	71	**1MB10■3-0DA3■-■■■■**	12	0.0013	16
1.5	**1.75**	**90 S**	2910	4.9	IE3	IE3	84.2	84.5	83.5	0.86	3	2.7	8.1	4.2	65	77	**1MB10■3-0EA0■-■■■■**	15	0.0021	16
2.2	**2.55**	**90 L**	2910	7.2	IE3	IE3	85.9	86.8	86.1	0.88	4.2	2.6	8.3	4	65	77	**1MB10■3-0EA4■-■■■■**	19	0.0031	16
3	**3.45**	**100 L**	2920	9.8	IE3	IE3	87.1	87.1	86.1	0.88	5.6	3.2	8.1	4.6	67	79	**1MB10■3-1AA4■-■■■■**	26	0.0054	16
4	**4.55**	**112 M**	2955	13	IE3	IE3	88.1	88.1	87.1	0.89	7.4	2.9	8	4.4	69	81	**1MB10■3-1BA2■-■■■■**	34	0.012	16
5.5	**6.3**	**132 S**	2950	18	IE3	IE3	89.2	89.2	88.2	0.9	9.9	1.9	7.3	3.7	68	80	**1MB10■3-1CA0■-■■■■**	43	0.024	16
7.5	**8.6**	**132 S**	2950	24	IE3	IE3	90.1	90.1	89.1	0.92	13.1	2.1	8.3	4	68	80	**1MB10■3-1CA1■-■■■■**	57	0.031	16
11	**12.6**	**160 M**	2955	36	IE3	IE3	91.2	91.2	90.2	0.87	20	2.5	7.6	3.8	70	82	**1MB10■3-1DA2■-■■■■**	75	0.053	16
15	**17.3**	**160 M**	2960	48	IE3	IE3	91.9	91.9	90.9	0.87	27	2.8	8.8	4.3	70	82	**1MB10■3-1DA3■-■■■■**	84	0.061	16
18.5	**21.3**	**160 L**	2955	60	IE3	IE3	92.4	92.4	91.4	0.9	32	2.8	8.3	3.9	70	82	**1MB10■3-1DA4■-■■■■**	94	0.068	16
4-pole: 1500 rpm at 50 Hz, 1800 rpm at 60 Hz [1]																				
0.55	**0.63**	**80 M**	1440	3.6	–	–	81.3	82	80.2	0.78	1.25	2.1	5.9	3.1	53	64	**1MB10■3-0DB2■-■■■■**	11	0.0021	16
0.75	**0.86**	**80 M**	1450	4.9	IE3	IE3	82.5	82.3	80	0.75	1.75	2.7	7.1	3.9	53	64	**1MB10■3-0DB3■-■■■■**	14	0.0029	16
1.1	**1.27**	**90 S**	1440	7.3	IE3	IE3	84.1	84.6	83.5	0.78	2.4	2.9	6.9	3.6	56	68	**1MB10■3-0EB0■-■■■■**	16	0.0036	16
1.5	**1.75**	**90 L**	1445	9.9	IE3	IE3	85.3	85.9	84.9	0.8	3.15	2.6	7.2	2.7	56	68	**1MB10■3-0EB4■-■■■■**	19	0.0049	16
2.2	**2.55**	**100 L**	1465	14	IE3	IE3	86.7	86.7	85.7	0.83	4.4	3.2	8.4	4.4	60	72	**1MB10■3-1AB4■-■■■■**	30	0.014	16
3	**3.45**	**100 L**	1460	20	IE3	IE3	87.7	87.7	86.7	0.83	5.9	2.5	8.3	3.9	60	72	**1MB10■3-1AB5■-■■■■**	30	0.014	16
4	**4.55**	**112 M**	1460	26	IE3	IE3	88.6	88.6	87.6	0.82	7.9	2.4	7.1	3.7	58	70	**1MB10■3-1BB2■-■■■■**	34	0.017	16
5.5	**6.3**	**132 S**	1475	36	IE3	IE3	89.6	89.6	88.6	0.84	10.5	2.8	8.2	3.9	64	76	**1MB10■3-1CB0■-■■■■**	64	0.046	16
7.5	**8.6**	**132 M**	1465	49	IE3	IE3	90.4	90.4	89.4	0.84	14.3	2.6	8.2	3.7	64	76	**1MB10■3-1CB2■-■■■■**	64	0.046	16
11	**12.6**	**160 M**	1475	71	IE3	IE3	91.4	91.4	90.4	0.84	20.5	2.6	7.6	3.4	65	77	**1MB10■3-1DB2■-■■■■**	83	0.083	16
15	**17.3**	**160 L**	1475	97	IE3	IE3	92.1	92.1	91.1	0.82	28.5	2.5	8.5	3.8	65	77	**1MB10■3-1DB4■-■■■■**	100	0.099	16
6-pole: 1000 rpm at 50 Hz, 1200 rpm at 60 Hz [1]																				
0.37	**0.43**	**80 M**	940	3.8	–	–	74.8	74.3	70.5	0.66	1.08	2.3	4.2	2.7	42	53	**1MB10■3-0DC2■-■■■■**	12	0.0025	13
0.55	**0.63**	**80 M**	935	5.6	–	–	77.2	77.2	75.5	0.67	1.53	2.5	4.5	2.8	42	53	**1MB10■3-0DC3■-■■■■**	14	0.0031	13
0.75	**0.86**	**90 S**	945	7.6	IE3	IE3	78.9	80	78.5	0.7	1.96	2.2	4.6	2.6	43	55	**1MB10■3-0EC0■-■■■■**	16	0.004	13
1.1	**1.27**	**90 L**	940	11	IE3	IE1	81	81	79.5	0.69	2.85	2.3	4.6	2.7	43	55	**1MB10■3-0EC4■-■■■■**	19	0.0048	13
1.5	**1.75**	**100 L**	970	15	IE3	IE2	82.5	82.5	81.5	0.76	3.45	1.9	6.9	3	59	71	**1MB10■3-1AC4■-■■■■**	30	0.014	13
2.2	**2.55**	**112 M**	970	22	IE3	IE2	84.3	84.3	83.3	0.8	4.7	2.3	6.8	3.4	65	71	**1MB10■3-1BC2■-■■■■**	39	0.014	13
3	**3.45**	**132 S**	970	30	IE3	IE3	85.6	85.6	84.6	0.77	6.6	1.7	5.2	2.6	63	75	**1MB10■3-1CC0■-■■■■**	43	0.029	13
4	**4.55**	**132 M**	970	39	IE3	IE3	86.8	86.8	85.8	0.77	8.6	1.9	5.7	2.9	63	75	**1MB10■3-1CC2■-■■■■**	52	0.037	13
5.5	**6.3**	**132 M**	970	54	IE3	IE3	88	88	87	0.78	11.6	1.9	5.9	2.9	63	75	**1MB10■3-1CC3■-■■■■**	52	0.037	13
7.5	**8.6**	**160 M**	975	73	IE3	IE3	89.1	89.9	89.3	0.76	16	1.9	4.9	2.3	67	79	**1MB10■3-1DC2■-■■■■**	93	0.098	13
11	**12.6**	**160 L**	975	108	IE3	IE3	90.3	91.9	90.7	0.77	23	1.9	5	2.3	67	79	**1MB10■3-1DC4■-■■■■**	115	0.12	13

| **Zones** | | | | | | | | | | | | | | | | | | |

© Siemens AG 2015

Selection and ordering data

P_{rated}, 50 Hz	P_{rated}, 60 Hz	Frame size	Operating values at rated output: n_{rated}, 50 Hz	T_{rated}, 50 Hz	IE class		η_{rated}, 50 Hz, 4/4	η_{rated}, 50 Hz, 3/4	η_{rated}, 50 Hz, 2/4	cos φ_{rated}, 50 Hz, 4/4	I_{rated}, 50 Hz, 400 V	T_{LR}/T_{rated}	I_{LR}/I_{rated}	T_B/T_{rated}	L_{pfA}, 50 Hz	L_{WA}, 50 Hz	Cast-iron series **1MB15.3** – *Basic Line* **1MB16.3** – *Performance Line* *IE3 version acc. to IEC 60034-30* Article No.	$m_{IM\ B3}$	J	Torque class
kW	kW	FS	rpm	Nm	50 Hz	60 Hz	%	%	%		A				dB(A)	dB(A)		kg	kgm^2	CL
• Cooling: self-ventilated (IC411) • Efficiency: High Efficiency IE3 • Insulation: thermal class 155 (temperature class F), IP55 degree of protection, utilization in accordance with thermal class 130 (temperature class B)																				
2-pole: 3000 rpm at 50 Hz, 3600 rpm at 60 Hz [1]																				
3	**3.45**	**100 L**	2920	10	IE3	IE3	87.1	87.1	86.1	0.88	5.6	3.2	8.1	4.6	67	79	**1MB1■■3-1AA4■-■■■■**	36	0.0054	16
4	**4.55**	**112 M**	2955	13	IE3	IE3	88.1	88.1	87.1	0.89	7.4	2.9	8	4.4	69	81	**1MB1■■3-1BA2■-■■■■**	45	0.012	16
5.5	**6.3**	**132 S**	2950	18	IE3	IE3	89.2	89.2	88.2	0.9	9.9	1.9	7.3	3.7	68	80	**1MB1■■3-1CA0■-■■■■**	58	0.024	16
7.5	**8.6**	**132 S**	2950	24	IE3	IE3	90.1	90.1	89.1	0.92	13.1	2.1	8.3	4	68	80	**1MB1■■3-1CA1■-■■■■**	73	0.031	16
11	**12.6**	**160 M**	2955	36	IE3	IE3	91.2	91.2	90.2	0.87	20	2.5	7.6	3.8	70	82	**1MB1■■3-1DA2■-■■■■**	100	0.053	16
15	**17.3**	**160 M**	2960	48	IE3	IE3	91.9	91.9	90.9	0.87	27	2.8	8.8	4.3	70	82	**1MB1■■3-1DA3■-■■■■**	110	0.061	16
18.5	**21.3**	**160 L**	2955	60	IE3	IE3	92.4	92.4	91.4	0.9	32	2.8	8.3	3.9	70	82	**1MB1■■3-1DA4■-■■■■**	127	0.068	16
22	**24.5**	**180 M**	2950	71	IE3	IE3	92.7	93	92.4	0.89	38.5	2.3	7.5	3.5	73	80	**1MB1■■3-1EA2■-■■■■**	160	0.08	16
30	**33.5**	**200 L**	2955	97	IE3	IE3	93.3	93.7	93.3	0.87	53	2.5	7	3.3	73	80	**1MB1■■3-2AA4■-■■■■**	225	0.134	16
37	**41.5**	**200 L**	2955	120	IE3	IE3	93.7	94.1	93.8	0.88	65	2.5	7.1	3.2	74	81	**1MB1■■3-2AA5■-■■■■**	250	0.158	16
45	**51**	**225 M**	2960	145	IE3	IE3	94	94.5	94.4	0.89	78	2.4	6.9	3.3	73	87	**1MB1■■3-2BA2■-■■■■**	315	0.26	16
55	**62**	**250 M**	2975	177	IE3	IE3	94.3	94.5	93.9	0.89	95	2.3	6.7	3.1	73	87	**1MB1■■3-2CA2■-■■■■**	385	0.46	13
75	**84**	**280 S**	2975	241	IE3	IE2	94.7	94.8	94.1	0.89	128	2.4	6.8	3	74	88	**1MB1■■3-2DA0■-■■■■**	510	0.77	13
90	**101**	**280 M**	2975	289	IE3	IE2	95	95.1	94.6	0.9	152	2.4	7.2	3.1	74	88	**1MB1■■3-2DA2■-■■■■**	590	0.94	13
110	**123**	**315 S**	2982	352	IE3	IE3	95.2	95.4	94.9	0.91	183	2.4	7.1	3.1	75	89	**1MB1■■3-3AA0■-■■■■**	750	1.39	13
132	**148**	**315 M**	2982	423	IE3	IE3	95.4	95.5	95.2	0.91	220	2.5	7.2	3.1	75	89	**1MB1■■3-3AA2■-■■■■**	880	1.6	13
160	**180**	**315 L**	2982	512	IE3	IE2	95.6	95.7	95.2	0.92	265	2.8	7.8	3.3	77	91	**1MB1■■3-3AA4■-■■■■**	980	1.9	13
200	**224**	**315 L**	2982	640	IE3	IE3	95.8	95.9	95.5	0.92	330	2.5	7.2	3	77	91	**1MB1■■3-3AA5■-■■■■**	1150	2.3	13

	Relubrication	Motor protection	Fan cover	Bearing size	Warranty	
Basic Line	Optional (standard from FS 280 upwards)	Optional	Steel	62 (63 from FS 280 upwards)	12 months	5
Performance Line	Standard from FS 160 (optional for FS 100 to 132)	Standard PTC	Steel	63	36 months	6

Zones	
Zone 21 (occasionally conductive and non-conductive dust) Ex tb IIIC	1
Zone 22 (rarely conductive or temporarily non-conductive dust) Ex tc IIIB	2
Zone 2 (rarely explosive or temporarily explosive gases) Ex nA IIC	3

Voltages [1]				No. of poles	Frame size	Motor type	Version			Order code(s)
50 Hz	230 VΔ/400 VY	60 Hz [2]	460 VY	2	100 L ... 315 L	1MB1■■3-1A ... -3A	**Standard**	2	2	–
50 Hz	400 VΔ/690 VY	60 Hz [2]	460 VΔ	2	100 L ... 315 L	1MB1■■3-1A ... -3A	**Standard**	3	4	–
50 Hz	500 VY			2	100 L ... 315 L	1MB1■■3-1A ... -3A	Without add. charge	2	7	–
50 Hz	500 VΔ			2	100 L ... 315 L	1MB1■■3-1A ... -3A	Without add. charge	4	0	–
Further voltages [2]		For price information, code numbers, order codes and descriptions, see from Page 4/22						9	0	. . .

Types of construction		No. of poles	Frame size	Motor type	Version		Order code(s)
Without flange	IM B3 [3]	2	100 L ... 315 L	1MB1■■3-1A ... -3A	**Standard**	A	–
With flange	IM B5 [3]	2	100 L ... 315 M	1MB1■■3-1A ... -3A	With add. charge	F	–
With standard flange	IM B14 [3]	2	100 L ... 160 L	1MB1■■3-1A ... -1D	With add. charge	K	–
Further types of construction	For price information, code letters and descriptions, see from Page 4/25					■	. . .

Motor protection	Line	No. of poles	Frame size	Motor type	Version		Order code(s)
Without	Only possible for **Basic Line**	2	100 L ... 315 L	1MB15■3-1A ... -3A	**Standard**	A	–
PTC thermistor with 3 temperature sensors	**Basic Line**	2	100 L ... 315 L	1MB15■3-1A ... -3A	With additional charge	B	–
	Performance Line	2	100 L ... 315 L	1MB16■3-1A ... -3A	**Standard**	B	–
Further motor protection	For price information, code letters and descriptions, see from Page 4/28					■	. . .

Terminal box position	No. of poles	Frame size	Motor type	Version		Order code(s)
Terminal box at top	2	100 L ... 315 L	1MB1■■3-1A ... -3A	**Standard**	4	–
Further terminal box positions	For price information, code numbers and descriptions, see from Page 4/30					

Special versions	No. of poles	Frame size	Motor type		Order code(s)
Options	For price information, order codes and descriptions, see from Page 4/34		**1MB1■■3-. . . . ■-■■■■**	**-Z**	. . .+. . .+. . .+. . .

[1] Parallel supply lines are required in the case of connection to ≤ 240 V. For frame size 315 with connection to ≤ 240 V, due to the high current, a drilled, removable entry plate (Order code **R52**) or a larger terminal box (Order code **R50**) can be used. Order codes **R52** and **R50** alter the motor dimensions.

[2] Operating values at rated output for 60 Hz are stored in the Drive Technology (DT) Configurator.

[3] Types derived from IM B3 (IM B6/7/8, IM V6 and IM V5), from IM B5 (IM V3 and IM V1) and from IM B14 (IM V19 and IM V18) are possible, provided that no requirements exist for condensation drainage holes (**H03**) and stamping of the type on the rating plate. The basic type IM B3, IM B5 or IM B14 is stamped as standard on the rating plate. When ordering with condensation drainage holes (**H03**), the type must be specified.

© Siemens AG 2015

Selection and ordering data (continued)

P_{rated}, 50 Hz	P_{rated}, 60 Hz	Frame size	Operating values at rated output: n_{rated}, 50 Hz	T_{rated}, 50 Hz	IE class		η_{rated}, 50 Hz, 4/4	η_{rated}, 50 Hz, 3/4	η_{rated}, 50 Hz, 2/4	cos φ_{rated}, 50 Hz, 4/4	I_{rated}, 50 Hz, 400 V	T_{LR}/T_{rated}	I_{LR}/I_{rated}	T_B/T_{rated}	L_{pfA}, 50 Hz	L_{WA}, 50 Hz	Cast-iron series 1MB15.3 – *Basic Line* 1MB16.3 – *Performance Line* *IE3 version acc. to IEC 60034-30* Article No.	$m_{IM\ B3}$	J	Torque class
kW	kW	FS	rpm	Nm	50 Hz	60 Hz	%	%	%		A				dB(A)	dB(A)		kg	kgm^2	CL
• Cooling: self-ventilated (IC411) • Efficiency: High Efficiency IE3 • Insulation: thermal class 155 (temperature class F), IP55 degree of protection, utilization in accordance with thermal class 130 (temperature class B)																				
4-pole: 1500 rpm at 50 Hz, 1800 rpm at 60 Hz [1]																				
2.2	2.55	100 L	1465	14	IE3	IE3	86.7	86.7	85.7	0.83	4.4	3.2	8.4	4.4	60	72	1MB1■■3-1AB4■-■■■■	40	0.014	16
3	3.45	100 L	1460	20	IE3	IE3	87.7	87.7	86.7	0.83	5.9	2.5	8.3	3.9	60	72	1MB1■■3-1AB5■-■■■■	40	0.014	16
4	4.55	112 M	1460	26	IE3	IE3	88.6	88.6	87.6	0.82	7.9	2.4	7.1	3.7	58	70	1MB1■■3-1BB2■-■■■■	46	0.017	16
5.5	6.3	132 S	1475	36	IE3	IE3	89.6	89.6	88.6	0.84	10.5	2.8	8.2	3.9	64	76	1MB1■■3-1CB0■-■■■■	74	0.046	16
7.5	8.6	132 M	1465	49	IE3	IE3	90.4	90.4	89.4	0.84	14.3	2.6	8.2	3.7	64	76	1MB1■■3-1CB2■-■■■■	80	0.046	16
11	12.6	160 M	1475	71	IE3	IE3	91.4	91.4	90.4	0.84	20.5	2.6	7.6	3.4	65	77	1MB1■■3-1DB2■-■■■■	109	0.083	16
15	17.3	160 L	1475	97	IE3	IE3	92.1	92.1	91.1	0.82	28.5	2.5	8.5	3.8	65	77	1MB1■■3-1DB4■-■■■■	127	0.099	16
18.5	21.3	180 M	1470	120	IE3	IE3	92.6	93.2	93.2	0.82	35	2.5	7.2	3.3	66	73	1MB1■■3-1EB2■-■■■■	165	0.13	16
22	25.3	180 L	1470	143	IE3	IE3	93	93.7	93.7	0.83	41	2.3	6.8	3.3	68	75	1MB1■■3-1EB4■-■■■■	170	0.14	16
30	34.5	200 L	1470	195	IE3	IE2	93.6	94.3	94.4	0.84	55	2.6	7.3	3.1	65	72	1MB1■■3-2AB5■-■■■■	240	0.22	16
37	42.5	225 S	1478	239	IE3	IE2	93.9	94.5	94.4	0.86	66	2.5	6.4	2.7	65	78	1MB1■■3-2BB0■-■■■■	285	0.42	16
45	52	225 M	1478	291	IE3	IE2	94.2	94.9	95.1	0.86	80	2.6	6.4	2.7	65	78	1MB1■■3-2BB2■-■■■■	320	0.47	16
55	63	250 M	1482	354	IE3	IE2	94.6	95.1	95	0.87	96	2.5	6.8	2.9	66	79	1MB1■■3-2CB2■-■■■■	420	0.85	16
75	86	280 S	1485	482	IE3	IE2	95	95.3	95	0.86	133	2.5	6.9	3	69	83	1MB1■■3-2DB0■-■■■■	570	1.39	16
90	104	280 M	1485	579	IE3	IE2	95.2	95.5	95.3	0.87	157	2.6	7.2	3	70	84	1MB1■■3-2DB2■-■■■■	670	1.7	16
110	127	315 S	1488	706	IE3	IE3	95.4	95.8	95.5	0.87	191	2.6	6.8	2.9	70	84	1MB1■■3-3AB0■-■■■■	760	2.2	16
132	152	315 M	1490	846	IE3	IE3	95.6	95.9	95.9	0.87	230	2.8	7.3	3	73	87	1MB1■■3-3AB2■-■■■■	960	2.9	16
160	184	315 L	1490	1025	IE3	IE3	95.8	96.1	96.1	0.87	275	2.9	7.3	3.1	73	87	1MB1■■3-3AB4■-■■■■	990	3.1	16
200	230	315 L	1488	1284	IE3	IE2	96	96.3	96.1	0.88	340	3.2	7.4	3	73	87	1MB1■■3-3AB5■-■■■■	1190	3.7	16

	Relubrication	Motor protection	Fan cover	Bearing size	Warranty		
Basic Line	Optional (standard from FS 280 upwards)	Optional	Steel	62 (63 from FS 280 upwards)	12 months	5	
Performance Line	Standard from FS 160 (optional for FS 100 to 132)	Standard PTC	Steel	63	36 months	6	

Zones	
Zone 21 (occasionally conductive and non-conductive dust) Ex tb IIIC	1
Zone 22 (rarely conductive or temporarily non-conductive dust) Ex tc IIIB	2
Zone 2 (rarely explosive or temporarily explosive gases) Ex nA IIC	3

Voltages [1]				No. of poles	Frame size	Motor type	Version			Order code(s)
50 Hz	230 VΔ/400 VY	60 Hz [2]	460 VY	4	100 L ... 315 L	1MB1■■3-1A ... -3A	**Standard**	2	2	–
50 Hz	400 VΔ/690 VY	60 Hz [2]	460 VΔ	4	100 L ... 315 L	1MB1■■3-1A ... -3A	**Standard**	3	4	–
50 Hz	500 VY			4	100 L ... 315 L	1MB1■■3-1A ... -3A	Without add. charge	2	7	–
50 Hz	500 VΔ			4	100 L ... 315 L	1MB1■■3-1A ... -3A	Without add. charge	4	0	–
Further voltages [2]		For price information, code numbers, order codes and descriptions, see from Page 4/22						9	0	. . .

Types of construction			No. of poles	Frame size	Motor type	Version		Order code(s)
Without flange	IM B3 [3]		4	100 L ... 315 L	1MB1■■3-1A ... -3A	**Standard**	A	–
With flange	IM B5 [3]		4	100 L ... 315 M	1MB1■■3-1A ... -3A	With add. charge	F	–
With standard flange	IM B14 [3]		4	100 L ... 160 L	1MB1■■3-1A ... -1D	With add. charge	K	–
Further types of construction		For price information, code letters and descriptions, see from Page 4/25					■	. . .

Motor protection	Line	No. of poles	Frame size	Motor type	Version		Order code(s)
Without	Only possible for **Basic Line**	4	100 L ... 315 L	1MB15■3-1A ... -3A	**Standard**	A	–
PTC thermistor with 3 temperature sensors	**Basic Line**	4	100 L ... 315 L	1MB15■3-1A ... -3A	With additional charge	B	–
	Performance Line	4	100 L ... 315 L	1MB16■3-1A ... -3A	**Standard**	B	–
Further motor protection	For price information, code letters and descriptions, see from Page 4/28					■	. . .

Terminal box position	No. of poles	Frame size	Motor type	Version		Order code(s)
Terminal box at top	4	100 L ... 315 L	1MB1■■3-1A ... -3A	**Standard**	4	–
Further terminal box positions	For price information, code numbers and descriptions, see from Page Page 4/30					

Special versions	No. of poles	Frame size	Motor type		Order code(s)
Options	For price information, order codes and descriptions, see from Page 4/34		**1MB1■■3-. . . . ■-■■■■**	-Z	. . .+. . .+. . .+. . .

1) Parallel supply lines are required in the case of connection to ≤ 240 V. For frame size 315 with connection to ≤ 240 V, due to the high current, a drilled, removable entry plate (Order code **R52**) or a larger terminal box (Order code **R50**) can be used. Order codes **R52** and **R50** alter the motor dimensions.

2) Operating values at rated output for 60 Hz are stored in the Drive Technology (DT) Configurator.

3) Types derived from IM B3 (IM B6/7/8, IM V6 and IM V5), from IM B5 (IM V3 and IM V1) and from IM B14 (IM V19 and IM V18) are possible, provided that no requirements exist for condensation drainage holes (**H03**) and stamping of the type on the rating plate. The basic type IM B3, IM B5 or IM B14 is stamped as standard on the rating plate. When ordering with condensation drainage holes (**H03**), the type must be specified.

© Siemens AG 2015

Selection and ordering data (continued)

P_{rated}, 50 Hz	P_{rated}, 60 Hz	Frame size	Operating values at rated output: n_{rated},	T_{rated},	IE class		η_{rated}, 50 Hz, 4/4	η_{rated}, 50 Hz, 3/4	η_{rated}, 50 Hz, 2/4	cos φ_{rated}, 50 Hz, 4/4	I_{rated}, 50 Hz, 400 V	T_{LR}/T_{rated}	I_{LR}/I_{rated}	T_B/T_{rated}	L_{pfA}, 50 Hz	L_{WA}, 50 Hz	Cast-iron series **1MB15.3** – *Basic Line* **1MB16.3** – *Performance Line* *IE3 version acc. to IEC 60034-30* Article No.	$m_{IM\ B3}$	J	Torque class
kW	kW	FS	rpm	Nm	50 Hz	60 Hz	%	%	%		A				dB(A)	dB(A)		kg	kgm^2	CL
• Cooling: self-ventilated (IC411) • Efficiency: High Efficiency IE3 • Insulation: thermal class 155 (temperature class F), IP55 degree of protection, utilization in accordance with thermal class 130 (temperature class B)																				
6-pole: 1000 rpm at 50 Hz, 1200 rpm at 60 Hz [1]																				
1.5	1.75	100 L	970	15	IE2	IE2	82.5	83.1	81.7	0.73	3.6	1.9	5.2	2.8	59	71	1MB1■■3-1AC4■-■■■■	36	0.011	13
2.2	2.55	112 M	970	22	IE2	IE2	84.3	85.1	83.8	0.75	5	2.2	5.6	2.8	65	74	1MB1■■3-1BC2■-■■■■	53	0.017	13
3	3.45	132 S	970	30	IE3	IE3	85.6	85.6	84.6	0.78	6.5	1.8	6.5	3	63	75	1MB1■■3-1CC0■-■■■■	70	0.037	13
4	4.55	132 M	970	39	IE3	IE3	86.8	86.8	85.8	0.79	8.4	1.9	6.6	3	63	75	1MB1■■3-1CC2■-■■■■	70	0.037	13
5.5	6.3	132 M	970	54	IE3	IE3	88	88	87	0.78	11.6	2	6.6	3.1	63	75	1MB1■■3-1CC3■-■■■■	83	0.037	13
7.5	8.6	160 M	975	73	IE3	IE3	89.1	89.1	88.1	0.8	15.2	1.6	6.3	2.8	67	79	1MB1■■3-1DC2■-■■■■	122	0.098	13
11	12.6	160 L	975	108	IE3	IE3	90.3	90.3	89.3	0.8	22	1.8	6.6	3	67	79	1MB1■■3-1DC4■-■■■■	147	0.12	13
15	18	180 L	975	147	IE3	IE2	91.2	91.9	91.9	0.8	29.5	2.3	5.9	2.8	61	68	1MB1■■3-1EC4■-■■■■	180	0.19	16
18.5	22	200 L	978	181	IE3	IE2	91.7	92.5	92.5	0.79	37	2.5	5.6	2.6	64	71	1MB1■■3-2AC4■-■■■■	215	0.28	16
22	26.5	200 L	978	215	IE3	IE2	92.2	93	92.9	0.79	43.5	2.5	5.6	2.6	61	68	1MB1■■3-2AC5■-■■■■	230	0.32	16
30	36	225 M	982	292	IE3	IE2	92.9	93.6	93.5	0.83	56	2.6	6.6	3	64	77	1MB1■■3-2BC2■-■■■■	325	0.67	16
37	44.5	250 M	985	359	IE3	IE2	93.3	94	94	0.85	67	2.7	7	2.9	62	75	1MB1■■3-2CC2■-■■■■	405	1	16
45	54	280 S	988	435	IE3	IE2	93.7	94.3	94.2	0.85	82	3	6.8	2.8	60	74	1MB1■■3-2DC0■-■■■■	510	1.4	16
55	66	280 M	988	532	IE3	IE2	94.1	94.6	94.4	0.85	99	3.2	7.2	3	60	74	1MB1■■3-2DC2■-■■■■	560	1.6	16
75	90	315 S	990	723	IE3	IE3	94.6	94.9	94.4	0.84	136	2.6	7.5	3.1	63	78	1MB1■■3-3AC0■-■■■■	750	2.6	16
90	108	315 M	991	867	IE3	IE2	94.9	95.3	95	0.85	161	2.5	6.7	2.8	63	78	1MB1■■3-3AC2■-■■■■	890	3.1	16
110	132	315 L	991	1060	IE3	IE2	95.1	95.5	95.3	0.84	199	2.8	7.2	3	63	78	1MB1■■3-3AC4■-■■■■	990	3.9	16
132	158	315 L	991	1272	IE3	IE2	95.4	95.9	95.8	0.84	240	2.7	7.2	3	67	82	1MB1■■3-3AC5■-■■■■	1110	4.4	16
160	192	315 L	991	1542	IE3	IE2	95.6	95.8	95.4	0.83	290	3.3	7.7	3.5	67	82	1MB1■■3-3AC6■-■■■■	1160	4.6	16

	Relubrication	Motor protection	Fan cover	Bearing size	Warranty					
Basic Line	Optional (standard from FS 280 upwards)	Optional	Steel	62 (63 from FS 280 upwards)	12 months	5				
Performance Line	Standard from FS 160 (optional for FS 100 to 132)	Standard PTC	Steel	63	36 months	6				

Zones										
Zone 21 (occasionally conductive and non-conductive dust) Ex tb IIIC						1				
Zone 22 (rarely conductive or temporarily non-conductive dust) Ex tc IIIB						2				
Zone 2 (rarely explosive or temporarily explosive gases) Ex nA IIC						3				

Voltages [1]				No. of poles	Frame size	Motor type	Version				Order code(s)
50 Hz	230 VΔ/400 VY	60 Hz [2]	460 VY	6	100 L ... 315 L	1MB1■■3-1A ... -3A	**Standard**	2	2		–
50 Hz	400 VΔ/690 VY	60 Hz [2]	460 VΔ	6	100 L ... 315 L	1MB1■■3-1A ... -3A	**Standard**	3	4		–
50 Hz	500 VY			6	100 L ... 315 L	1MB1■■3-1A ... -3A	Without add. charge	2	7		–
50 Hz	500 VΔ			6	100 L ... 315 L	1MB1■■3-1A ... -3A	Without add. charge	4	0		–
Further voltages [2]		For price information, code numbers, order codes and descriptions, see from Page 4/22						9	0		...

Types of construction			No. of poles	Frame size	Motor type	Version				Order code(s)
Without flange	IM B3 [3]		6	100 L ... 315 L	1MB1■■3-1A ... -3A	**Standard**			A	–
With flange	IM B5 [3]		6	100 L ... 315 M	1MB1■■3-1A ... -3A	With add. charge			F	–
With standard flange	IM B14 [3]		6	100 L ... 160 L	1MB1■■3-1A ... -1D	With add. charge			K	–
Further types of construction		For price information, code letters and descriptions, see from Page 4/25							■	...

Motor protection	Line	No. of poles	Frame size	Motor type	Version					Order code(s)
Without	Only possible for **Basic Line**	6	100 L ... 315 L	1MB15■3-1A ... -3A	**Standard**				A	–
PTC thermistor with 3 temperature sensors	**Basic Line**	6	100 L ... 315 L	1MB15■3-1A ... -3A	With additional charge				B	–
	Performance Line	6	100 L ... 315 L	1MB16■3-1A ... -3A	**Standard**				B	–
Further motor protection	For price information, code letters and descriptions, see from Page 4/28								■	...

Terminal box position		No. of poles	Frame size	Motor type	Version					Order code(s)
Terminal box at top		6	100 L ... 315 L	1MB1■■3-1A ... -3A	**Standard**				4	–
Further terminal box positions	For price information, code numbers and descriptions, see from Page Page 4/30									

Special versions		No. of poles	Frame size	Motor type						Order code(s)
Options	For price information, order codes and descriptions, see from Page 4/34			**1MB1■■3-....■-■■■■**					-Z	...+...+...+...

[1] Parallel supply lines are required in the case of connection to ≤ 240 V. For frame size 315 with connection to ≤ 240 V, due to the high current, a drilled, removable entry plate (Order code **R52**) or a larger terminal box (Order code **R50**) can be used. Order codes **R52** and **R50** alter the motor dimensions.

[2] Operating values at rated output for 60 Hz are stored in the Drive Technology (DT) Configurator.

[3] Types derived from IM B3 (IM B6/7/8, IM V6 and IM V5), from IM B5 (IM V3 and IM V1) and from IM B14 (IM V19 and IM V18) are possible, provided that no requirements exist for condensation drainage holes (**H03**) and stamping of the type on the rating plate. The basic type IM B3, IM B5 or IM B14 is stamped as standard on the rating plate. When ordering with condensation drainage holes (**H03**), the type must be specified.

© Siemens AG 2015

Selection and ordering data

Voltages	Voltage code 12th and 13th position of the Article No.		Additional identification code with order code and plain text if required	Motor category							
				Motor version	**Motor type (alum.)**	**Motor type – Frame size**					
						80	**90**	**100**	**112**	**132**	**160**
				Ex t (Zone 21/22) Ex n (Zone 2) IE1 Standard Efficiency	1MB10.2	**1MB10.2**					
				Ex t (Zone 21/22) Ex n (Zone 2) IE2 High Efficiency	1MB10.1	**1MB10.1**					
				Ex t (Zone 21/22) Ex n (Zone 2) IE3 Premium Efficiency	1MB10.3	**1MB10.3**					
1MB10 . . - . . . . ■ - ■ . . .			Order code	Motor version	Motor type	Frame size 80	90	100	112	132	160
Voltage at 50 Hz or 60 Hz (50 Hz output)											
50 Hz 230 VΔ/400 VY, 60 Hz 460 VY	**2**	**2**	–	All	All	□	□	□	□	□	□
50 Hz 400 VΔ/690 VY, 60 Hz 460 VΔ	**3**	**4**	–	All	All	□	□	□	□	□	□
50 Hz 500 VY	**2**	**7**	–	All	All	○	○	○	○	○	○
50 Hz 500 VΔ	**4**	**0**	–	All	All	–	–	○	○	○	○
50 Hz 220 VΔ/380 VY, 60 Hz 440 VY	**2**	**1**	–	All	All	✓	✓	✓	✓	✓	✓
50 Hz 380 VΔ/660 VY, 60 Hz 440 VΔ	**3**	**3**	–	All	All	✓	✓	✓	✓	✓	✓
50 Hz 240 VΔ/415 VY, 60 Hz 480 VY	**2**	**3**	–	All	All	✓	✓	✓	✓	✓	✓
50 Hz 415 VΔ, 60 Hz 480 VΔ	**3**	**5**	–	All	All	✓	✓	✓	✓	✓	✓
50 Hz 400 VY	**0**	**2**	–	All	All	○	○	○	○	○	○
50 Hz 400 VΔ	**0**	**4**	–	All	All	○	○	○	○	○	○
Voltage at 60 Hz (50 Hz output)											
220 VΔ/380 VY; 50 Hz output [1]	**9**	**0**	**M2A**	All	All	✓	✓	✓	✓	✓	✓
220 VΔ/380 VY; 60 Hz output	**9**	**0**	**M1A**	All	All	✓	✓	✓	✓	✓	✓
380 VΔ/660 VY; 50 Hz output [1]	**9**	**0**	**M2B**	All	All	✓	✓	✓	✓	✓	✓
380 VΔ/660 VY; 60 Hz output	**9**	**0**	**M1B**	All	All	✓	✓	✓	✓	✓	✓
440 VY; 50 Hz output [1]	**9**	**0**	**M2C**	All	All	✓	✓	✓	✓	✓	✓
440 VY; 60 Hz output	**9**	**0**	**M1C**	All	All	✓	✓	✓	✓	✓	✓
440 VΔ; 50 Hz output [1]	**9**	**0**	**M2D**	All	All	✓	✓	✓	✓	✓	✓
440 VΔ; 60 Hz output	**9**	**0**	**M1D**	All	All	✓	✓	✓	✓	✓	✓
460 VY; 50 Hz output [1]	**9**	**0**	**M2E**	All	All	✓	✓	✓	✓	✓	✓
460 VY; 60 Hz output	**9**	**0**	**M1E**	All	All	○	○	○	○	○	○
460 VΔ; 50 Hz output [1]	**9**	**0**	**M2F**	All	All	✓	✓	✓	✓	✓	✓
460 VΔ; 60 Hz output	**9**	**0**	**M1F**	All	All	○	○	○	○	○	○
575 VY; 50 Hz output [1]	**9**	**0**	**M2G**	All	All	✓	✓	✓	✓	✓	✓
575 VY; 60 Hz output	**9**	**0**	**M1G**	All	All	✓	✓	✓	✓	✓	✓
575 VΔ; 50 Hz output [1]	**9**	**0**	**M2H**	All	All	✓	✓	✓	✓	✓	✓
575 VΔ; 60 Hz output	**9**	**0**	**M1H**	All	All	✓	✓	✓	✓	✓	✓
Non-standard voltage and/or frequencies											
Non-standard winding [2]	**9**	**0**	**M1Y** • and customer specifications	All	All	✓	✓	✓	✓	✓	✓

□ Standard version
○ Without additional charge
• This order code only determines the price of the version – Additional plain text is required.
✓ With additional charge
– Not possible

[1] An output of 3.7 kW is stamped on the rating plate for versions 1MB1... - 1BA2, 1MB1... - 1BB2, 1MB1... - 1CC2 and 1MB1... - 1DD2 at 60 Hz with 50 Hz output in accordance with the international efficiency classification to IEC 60034-30.

[2] Plain text must be specified in the order: Voltage between 200 and 690 V (voltages outside this range are available on request), frequency, circuit, for 60 Hz additionally required rated output in kW.

© Siemens AG 2015

Voltages · Cast-iron series 1MB15 Basic Line, 1MB16 Performance Line

Selection and ordering data

Voltages	Voltage code 12th and 13th position of the Article No.		Additional identification code with order code and plain text if required	Motor category										
				Motor version	**Motor type (cast-iron)**	**Motor type – Frame size**								
						100	**112**	**132**	**160**	**180**	**200**	**225**	**250**	**280**	**315**
				Ex t (Zone 21/22) Ex n (Zone 2) IE2 High Efficiency	1MB15.1	**1MB15.1 Basic Line**									
					1MB16.1	**1MB16.1 Performance Line**									
				Ex t (Zone 21/22) Ex n (Zone 2) IE3 Premium Efficiency	1MB15.3	**1MB15.3 Basic Line**									
					1MB16.3	**1MB16.3 Performance Line**									
1MB15 . . - . . . . ■ - ■ . . .				Motor version	Motor type	Frame size									
1MB16 . . - . . . . ■ - ■ . . .			Order code			100	112	132	160	180	200	225	250	280	315
Voltage at 50 Hz or 60 Hz															
50 Hz 230 VΔ/400 VY, 60 Hz 460 VY	**2**	**2**	–	All	All	□	□	□	□	□	□	□	□	□	□
50 Hz 400 VΔ/60 VY, 60 Hz 460 VΔ	**3**	**4**	–	All	All	□	□	□	□	□	□	□	□	□	□
50 Hz 500 VY	**2**	**7**	–	All	All	○	○	○	○	○	○	○	○	○	○
50 Hz 500 VΔ	**4**	**0**	–	All	All	○	○	○	○	○	○	○	○	○	○
50 Hz 220 VΔ/380 VY, 60 Hz 440 VY	**2**	**1**	–	All	All	✓	✓	✓	✓	✓	✓	✓	✓	✓	✓
50 Hz 380 VΔ/660 VY, 60 Hz 440 VΔ	**3**	**3**	–	All	All	✓	✓	✓	✓	✓	✓	✓	✓	✓	✓
50 Hz 240 VΔ/415 VY, 60 Hz 480 VY	**2**	**3**	–	All	All	✓	✓	✓	✓	✓	✓	✓	✓	✓	✓
50 Hz 415 VΔ, 60 Hz 480 VΔ	**3**	**5**	–	All	All	✓	✓	✓	✓	✓	✓	✓	✓	✓	✓
50 Hz 400 VY	**0**	**2**	–	All	All	○	○	○	○	○	○	○	○	○	○
50 Hz 400 VΔ	**0**	**4**	–	All	All	○	○	○	○	○	○	○	○	○	○
Voltage at 60 Hz and required output															
220 VΔ/380 VY; 50 Hz output [1]	**9**	**0**	**M2A**	All	All	✓	✓	✓	✓	✓	✓	✓	✓	✓	✓
220 VΔ/380 VY; 60 Hz output	**9**	**0**	**M1A**	All	All	✓	✓	✓	✓	✓	✓	✓	✓	✓	✓
380 VΔ/660 VY; 50 Hz output [1]	**9**	**0**	**M2B**	All	All	✓	✓	✓	✓	✓	✓	✓	✓	✓	✓
380 VΔ/660 VY; 60 Hz output	**9**	**0**	**M1B**	All	All	✓	✓	✓	✓	✓	✓	✓	✓	✓	✓
440 VY; 50 Hz output [1]	**9**	**0**	**M2C**	All	All	✓	✓	✓	✓	✓	✓	✓	✓	✓	✓
440 VY; 60 Hz output	**9**	**0**	**M1C**	All	All	✓	✓	✓	✓	✓	✓	✓	✓	✓	✓
440 VΔ; 50 Hz output [1]	**9**	**0**	**M2D**	All	All	✓	✓	✓	✓	✓	✓	✓	✓	✓	✓
440 VΔ; 60 Hz output	**9**	**0**	**M1D**	All	All	✓	✓	✓	✓	✓	✓	✓	✓	✓	✓
460 VY; 50 Hz output [1]	**9**	**0**	**M2E**	All	All	✓	✓	✓	✓	✓	✓	✓	✓	✓	✓
460 VY; 60 Hz output	**9**	**0**	**M1E**	All	All	○	○	○	○	○	○	○	○	○	○
460 VΔ; 50 Hz output [1]	**9**	**0**	**M2F**	All	All	✓	✓	✓	✓	✓	✓	✓	✓	✓	✓
460 VΔ; 60 Hz output	**9**	**0**	**M1F**	All	All	○	○	○	○	○	○	○	○	○	○
575 VY; 50 Hz output [1]	**9**	**0**	**M2G**	All	All	✓	✓	✓	✓	✓	✓	✓	✓	✓	✓
575 VY; 60 Hz output	**9**	**0**	**M1G**	All	All	✓	✓	✓	✓	✓	✓	✓	✓	✓	✓
575 VΔ; 50 Hz output [1]	**9**	**0**	**M2H**	All	All	✓	✓	✓	✓	✓	✓	✓	✓	✓	✓
575 VΔ; 60 Hz output	**9**	**0**	**M1H**	All	All	✓	✓	✓	✓	✓	✓	✓	✓	✓	✓
Non-standard voltage and/or frequencies															
Non-standard winding [2]	**9**	**0**	**M1Y** • and customer specifications	All	All	✓	✓	✓	✓	✓	✓	✓	✓	✓	✓

□ Standard version
○ Without additional charge
• This order code only determines the price of the version – Additional plain text is required.
✓ With additional charge
– Not possible

[1] An output of 3.7 kW is stamped on the rating plate for versions 1MB1... - 1BA2, 1MB1... - 1BB2, 1MB1... - 1CC2 and 1MB1... - 1DD2 at 60 Hz with 50 Hz output in accordance with the international efficiency classification to IEC 60034-30.

[2] Plain text must be specified in the order: Voltage between 200 and 690 V (voltages outside this range are available on request), frequency, circuit, for 60 Hz additionally required rated output in kW.

© Siemens AG 2015

Selection and ordering data

Types of construction		Type of construc. letter 14th position of the Article No.	For types of construction with order code(s) Article No. with additional identification code **-Z**	Motor category							
				Motor version	**Motor type (alum.)**	**Motor type – Frame size**					
						80	**90**	**100**	**112**	**132**	**160**
				Ex t (Zone 21/22) Ex n (Zone 2) IE1 Standard Efficiency	1MB10.2	**1MB10.2**					
				Ex t (Zone 21/22) Ex n (Zone 2) IE2 High Efficiency	1MB10.1	**1MB10.1**					
				Ex t (Zone 21/22) Ex n (Zone 2) IE3 Premium Efficiency	1MB10.3	**1MB10.3**					
1MB10 . . - . . . . . - . ■ . . (-Z)			Order code	Motor version	Motor type	Frame size 80	90	100	112	132	160
Without flange											
IM B3	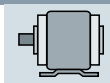	**A**	**–**	All	All	□	□	□	□	□	□
IM B6 [1]	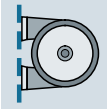	**T**	**–**	All	All	□	□	□	□	□	□
IM B7 [1]	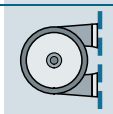	**U**	**–**	All	All	□	□	□	□	□	□
IM B8 [1]		**V**	**–**	All	All	□	□	□	□	□	□
IM V6 [1]	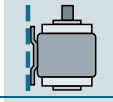	**D**	**–**	All	All	□	□	□	□	□	□
IM V5 with protective cover [1]	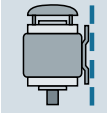	**C**	**H00**	All	All	✓	✓	✓	✓	✓	✓
With flange		**acc. to EN 50347 acc. to DIN 42 948**				**FF165 A 200**	**FF165 A 200**	**FF215 A 250**	**FF215 A 250**	**FF265 A 300**	**FF300 A 350**
IM B5	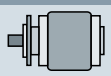	**F**	**–**	All	All	✓	✓	✓	✓	✓	✓
IM V1 with protective cover [1] [2]	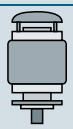	**G**	**H00**	All	All	✓	✓	✓	✓	✓	✓
IM V3 [1]		**H**	**–**	All	All	✓	✓	✓	✓	✓	✓
IM B35	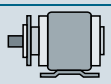	**J**	**–**	All	All	✓	✓	✓	✓	✓	✓

For legends and footnotes, see Page 4/24.

© Siemens AG 2015

Types of construction · Aluminum series 1MB10

Types of construction		Type of construc. letter 14th position of the Article No.	For types of construction with order code(s) Article No. with additional identification code **-Z**	Motor category							
				Motor version	**Motor type (alum.)**	**Motor type – Frame size**					
						80	**90**	**100**	**112**	**132**	**160**
				Ex t (Zone 21/22) Ex n (Zone 2) IE1 Standard Efficiency	1MB10.2	**1MB10.2**					
				Ex t (Zone 21/22) Ex n (Zone 2) IE2 High Efficiency	1MB10.1	**1MB10.1**					
				Ex t (Zone 21/22) Ex n (Zone 2) IE3 Premium Efficiency	1MB10.3	**1MB10.3**					
1MB10 . . - . . . . . - . ■ . . (-Z)		Order code		Motor version	Motor type	Frame size					
						80	90	100	112	132	160
With standard flange		**acc. to EN 50347 acc. to DIN 42 948**				**FT100 C 120**	**FT115 C 140**	**FT130 C 160**	**FT130 C 160**	**FT165 C 200**	**FT215 C 250**
IM B14 [1]	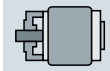	**K**	**–**	All	All	✓	✓	✓	✓	✓	✓
IM V19 [1]	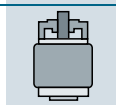	**L**	**–**	All	All	✓	✓	✓	✓	✓	✓
IM V18 with protective cover [1]	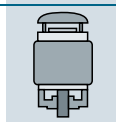	**M**	**H00**	All	All	✓	✓	✓	✓	✓	✓
IM B34	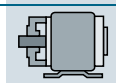	**N**	**–**	All	All	✓	✓	✓	✓	✓	✓
With special flange next larger		**acc. to EN 50347 acc. to DIN 42 948**				**FT130 C 160**	**FT130 C 160**	**FT165 C 200**	**FT165 C 200**	**FT215 C 250**	**FT265 C 300**
IM B14 [1]	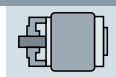	**K**	**P01**	All	All	✓	✓	✓	✓	✓	–
IM V19 [1]	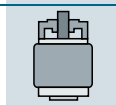	**L**	**P01**	All	All	–	–	✓	✓	✓	–
IM V18 with protective cover [1]	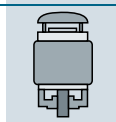	**M**	**P01+H00**	All	All	–	–	✓	✓	✓	–
IM B34	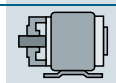	**N**	**P01**	All	All	–	–	✓	✓	✓	–

□ Standard version
✓ With additional charge
– Not possible

[1] The following applies for explosion-proof motors: in the case of the types of construction with shaft extension down, the version "with protective cover" is required. For types of construction with shaft extension pointing upwards, a suitable cover must be implemented to prevent small parts from falling into the fan cover (see the standard IEC/EN 60079-0). The cover must not block the cooling air flow.

[2] The "Standard cylindrical shaft extension" option order code **L05** is not possible.

© Siemens AG 2015

Selection and ordering data

Types of construction		Type of construction letter 14th pos. of Article No.	For types of construction with order code(s) Article No. with additional identification code **-Z**	Motor category											
				Motor version	**Motor type (cast-iron)**	**Motor type – Frame size**									
						100	**112**	**132**	**160**	**180**	**200**	**225**	**250**	**280**	**315 S/M**	**315 L**
				Ex t (Zone 21/22) Ex n (Zone 2) IE2 High Efficiency	1MB15.1	**1MB15.1 Basic Line**										
					1MB16.1	**1MB16.1 Performance Line**										
				Ex t (Zone 21/22) Ex n (Zone 2) IE3 Premium Efficiency	1MB15.3	**1MB15.3 Basic Line**										
					1MB16.3	**1MB16.3 Performance Line**										
1MB15 . . - . . . . . - . ■ . . (-Z)				Motor version	Motor type	Frame size										
1MB16 . . - . . . . . - . ■ . . (-Z)			Order code			100	112	132	160	180	200	225	250	280	315 S/M	315 L
Without flange																
IM B3	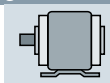	**A**	–	All	All	□	□	□	□	□	□	□	□	□	□	□
IM B6 [1]	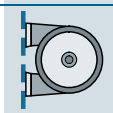	**T**	–	All	All	□	□	□	□	□	□	□	□	□	□	□
IM B7 [1]	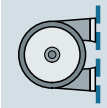	**U**	–	All	All	□	□	□	□	□	□	□	□	□	□	□
IM B8 [1]	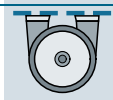	**V**	–	All	All	□	□	□	□	□	□	□	□	□	□	□
IM V6 [1]	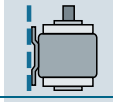	**D**	–	All	All	□	□	□	□	□	□	□	□	□	□	□
IM V5 with protective cover [1]	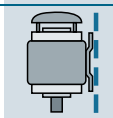	**C**	**H00**	All	All	✓	✓	✓	✓	✓	✓	✓	✓	✓	✓	✓
With flange		**acc. to EN 50347 acc. to DIN 42 948**				**FF215 A 250**	**FF215 A 250**	**FF265 A 300**	**FF300 A 350**	**FF300 A 350**	**FF350 A 400**	**FF400 A 450**	**FF500 A 550**	**FF500 A 550**	**FF600 A 660**	**FF600 A 660**
IM B5	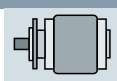	**F**	–	All	All	✓	✓	✓	✓	✓	✓	✓	✓	✓	✓	–
IM V1 with protective cover [1] [2]	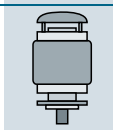	**G**	**H00**	All	All	✓	✓	✓	✓	✓	✓	✓	✓	✓	✓	✓
IM V3 [1]		**H**	–	All	All	✓	✓	✓	✓	✓	✓	✓	✓	✓	✓	–
IM B35 [1]	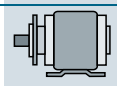	**J**	–	All	All	✓	✓	✓	✓	✓	✓	✓	✓	✓	✓	✓

For legends and footnotes, see Page 4/26.

© Siemens AG 2015

Supplements to article numbers and special versions
SIMOTICS XP 1MB1 Explosion-Proof Motors

Types of construction · Cast-iron series 1MB15 Basic Line, 1MB16 Performance Line

Types of construction		Type of construc. letter 14th pos. of Article No.	For types of construction with order code(s) Article No. with additional identification code **-Z**	Motor category											
				Motor version	**Motor type (cast-iron)**	**Motor type – Frame size** 100	112	132	160	180	200	225	250	280	315 S/M	315 L
				Ex t (Zone 21/22) Ex n (Zone 2) IE2 High Efficiency	1MB15.1	**1MB15.1 Basic Line**										
					1MB16.1	**1MB16.1 Performance Line**										
				Ex t (Zone 21/22) Ex n (Zone 2) IE3 Premium Efficiency	1MB15.3	**1MB15.3 Basic Line**										
					1MB16.3	**1MB16.3 Performance Line**										
1MB15 . . - . . . . . - . ■ . . (-Z)				Motor version	Motor type	Frame size 100	112	132	160	180	200	225	250	280	315 S/M	315 L
1MB16 . . - . . . . . - . ■ . . (-Z)			Order code													
With standard flange		**acc. to EN 50347 acc. to DIN 42 948**				**FT130 C 160**	**FT130 C 160**	**FT165 C 200**	**FT215 C 250**	– –	– –	– –	– –	– –	– –	– –
IM B14 [1]	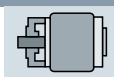	**K**	**–**	All	All	✓	✓	✓	✓	–	–	–	–	–	–	–
IM V19 [1]	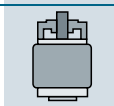	**L**	**–**	All	All	✓	✓	✓	✓	–	–	–	–	–	–	–
IM V18 with protective cover [1] [2]	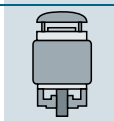	**M**	**H00**	All	All	✓	✓	✓	✓	–	–	–	–	–	–	–
IM B34	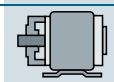	**N**	**–**	All	All	✓	✓	✓	✓	–	–	–	–	–	–	–
With special flange next larger		**acc. to EN 50347 acc. to DIN 42 948**				**FT165 C 200**	**FT165 C 200**	**FT215 C 250**	– –	– –	– –	– –	– –	– –	– –	– –
IM B14 [1]	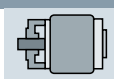	**K**	**P01**	All	All	✓	✓	✓	–	–	–	–	–	–	–	–
IM V19 [1]	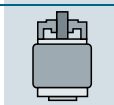	**L**	**P01**	All	All	✓	✓	✓	–	–	–	–	–	–	–	–
IM V18 with protective cover [1] [2]	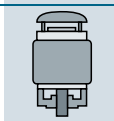	**M**	**P01+ H00**	All	All	✓	✓	✓	–	–	–	–	–	–	–	–
IM B34	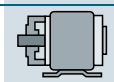	**N**	**P01**	All	All	✓	✓	✓	–	–	–	–	–	–	–	–

□ Standard version
✓ With additional charge
– Not possible

[1] The following applies for explosion-proof motors: in the case of the types of construction with shaft extension down, the version "with protective cover" is required. For types of construction with shaft extension pointing upwards, a suitable cover must be implemented to prevent small parts from falling into the fan cover (see the standard IEC/EN 60079-0). The cover must not block the cooling air flow.

[2] The "Standard cylindrical shaft extension" option order code **L05** is not possible.

© Siemens AG 2015

Selection and ordering data

Motor protection	Motor protection letter 15th position of the Article No.	Additional identification code with order code and plain text if required	Motor category							
			Motor version	**Motor type (alum.)**	**Motor type – Frame size**					
					80	**90**	**100**	**112**	**132**	**160**
			Ex t (Zone 21/22) Ex n (Zone 2) IE1 Standard Efficiency	1MB10.2	**1MB10.2**					
			Ex t (Zone 21/22) Ex n (Zone 2) IE2 High Efficiency	1MB10.1	**1MB10.1**					
			Ex t (Zone 21/22) Ex n (Zone 2) IE3 Premium Efficiency	1MB10.3	**1MB10.3**					
1MB10 . . - . . . . . - . . ■ .		Order code	Motor version	Motor type	Frame size 80	90	100	112	132	160
Motor protection (winding protection)										
Without motor protection	**A**	–	All	All	□	□	□	□	□	□
Motor protection with PTC thermistors with 3 embedded temperature sensors for tripping [1]	**B**	–	All	All	✓	✓	✓	✓	✓	✓
Motor protection with PTC thermistors with 6 embedded temperature sensors for alarm and tripping [1]	**C**	–	All	All	✓	✓	✓	✓	✓	✓
Motor temperature detection with embedded temperature sensor KTY 84-130 [1]	**F**	–	All	All	✓	✓	✓	✓	✓	✓
Motor temperature detection with embedded temperature sensor 2 × KTY 84-130 [1]	**G**	–	All	All	✓	✓	✓	✓	✓	✓
Installation of 3 external Pt100 resistance thermometers [1] [2]	**H**	–	All	All	–	–	✓	✓	✓	✓

□ Standard version
✓ With additional charge

[1] Evaluation with appropriate tripping unit (see Catalog IC 10) is recommended.

[2] Order codes **Q02** and **Q03** are not possible for frame sizes 100 to 160 in combination with 15th position of Article No. "**H**". It can only be supplied with a star or delta winding for direct switch-on (3 terminals).

© Siemens AG 2015

Selection and ordering data

Motor protection	Motor protection letter 15th position of the Article No.	Additional identification code with order code and plain text if required	Motor category										
			Motor version	**Motor type (cast-iron)**	**Motor type – Frame size**								
					100	**112**	**132**	**160**	**180**	**200**	**225**	**250**	**280**	**315**
			Ex t (Zone 21/22) Ex n (Zone 2) IE2 High Standard	1MB15.1	**1MB15.1 Basic Line**									
				1MB16.1	**1MB16.1 Performance Line**									
			Ex t (Zone 21/22) Ex n (Zone 2) IE3 Premium Efficiency	1MB15.3	**1MB15.3 Basic Line**									
				1MB16.3	**1MB16.3 Performance Line**									
1MB15 . . - . . . . . - . . ■ .			Motor version	Motor type	Frame size									
1MB16 . . - . . . . . - . . ■ .		Order code			100	112	132	160	180	200	225	250	280	315
Motor protection (winding protection)														
Without motor protection	A	–	All except 1MB16.. Performance Line		□	□	□	□	□	□	□	□	□	□
Motor protection with PTC thermistors with 3 embedded temperature sensors for tripping [1) 2)]	B	–	All	All	✓	✓	✓	✓	✓	✓	✓	✓	✓	✓
Motor protection with PTC thermistors with 6 embedded temperature sensors for alarm and tripping [2)]	C	–	All, standard version for Performance Line		✓	✓	✓	✓	✓	✓	✓	✓	✓	✓
Motor temperature detection with embedded temperature sensor KTY 84-130 [2)]	F	–	All	All	✓	✓	✓	✓	✓	✓	✓	✓	✓	✓
Motor temperature detection with embedded temperature sensor 2 x KTY 84-130 [2)]	G	–	All	All	✓	✓	✓	✓	✓	✓	✓	✓	✓	✓
Installation of 3 external Pt100 resistance thermometers [2) 3)]	H	–	All	All	✓	✓	✓	✓	✓	✓	✓	✓	✓	✓
Installation of 6 external Pt100 resistance thermometers in stator winding [2)]	J	–	All	All	–	–	–	–	✓	✓	✓	✓	✓	✓

□ Standard version
✓ With additional charge
– Not possible

4

1) For the Performance Line, motor protection by means of PTC thermistors with 3 built-in temperature sensors for tripping (motor protection code B) is already included in the basic price. For the Performance Line, the option "without motor protection" (motor protection code A) is not possible.

2) Evaluation with appropriate tripping unit (see Catalog IC 10) is recommended.

3) Order codes **Q02** and **Q03** are not possible for frame sizes 100 to 160 in combination with 15th position of Article No. "**H**". It can only be supplied with a star or delta winding for direct switch-on (3 terminals).

© Siemens AG 2015

Selection and ordering data

Terminal box position		Terminal box position identification code 16th position of the Article No.	Additional identification code with order code and plain text if required	Motor category							
				Motor version	**Motor type (alum.)**	**Motor type – Frame size**					
						80	**90**	**100**	**112**	**132**	**160**
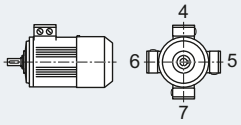				Ex t (Zone 21/22) Ex n (Zone 2) IE1 Standard Efficiency	1MB10.2	**1MB10.2**					
				Ex t (Zone 21/22) Ex n (Zone 2) IE2 High Efficiency	1MB10.1	**1MB10.1**					
				Ex t (Zone 21/22) Ex n (Zone 2) IE3 Premium Efficiency	1MB10.3	**1MB10.3**					
1MB10 . . - . . . . . - . . . ■			Order code	Motor version	Motor type	Frame size					
						80	90	100	112	132	160
Terminal box position											
Terminal box top [1]	4		–	All	All	□	□	□	□	□	□
Terminal box on RHS [2]	5		–	All	All	✓	✓	✓	✓	✓	✓
Terminal box on LHS [2]	6		–	All	All	✓	✓	✓	✓	✓	✓
Terminal box at bottom [2] [3]	7		–	All	All	–	–	✓	✓	✓	✓

□ Standard version
✓ With additional charge

1) For types of construction with feet, cast feet are standard.
2) For types of construction with feet, screwed-on feet are standard.
3) Not generally possible for motors with feet.

© Siemens AG 2015

Terminal box position · Cast-iron series 1MB15 Basic Line, 1MB16 Performance Line

Selection and ordering data

Terminal box position	Terminal box position identification code 16th position of the Article No.	Additional identification code with order code and plain text if required	Motor category										
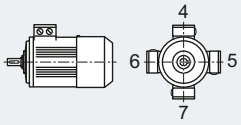			**Motor version**	**Motor type (cast-iron)**	**Motor type – Frame size**									
					100	**112**	**132**	**160**	**180**	**200**	**225**	**250**	**280**	**315**
			Ex t (Zone 21/22) Ex n (Zone 2) IE2 High Efficiency	1MB15.1	**1MB15.1 Basic Line**									
				1MB16.1	**1MB16.1 Performance Line**									
			Ex t (Zone 21/22) Ex n (Zone 2) IE3 Premium Efficiency	1MB15.3	**1MB15.3 Basic Line**									
				1MB16.3	**1MB16.3 Performance Line**									
1MB15 . . - . . . . . - . . . ■ **1MB16 . . - . . . . . - . . .** ■		Order code	Motor version	Motor type	Frame size									
					100	112	132	160	180	200	225	250	280	315
Terminal box position														
Terminal box top [1]	4	–	All	All	□	□	□	□	□	□	□	□	□	□
Terminal box on RHS [2]	5	–	All	All	✓	✓	✓	✓	✓	✓	✓	✓	✓	✓
Terminal box on LHS [2]	6	–	All	All	✓	✓	✓	✓	✓	✓	✓	✓	✓	✓
Terminal box at bottom [3]	7	–	All	All	✓	✓	✓	✓	–	–	–	–	–	–

□ Standard version
✓ With additional charge
– Not possible

1) For types of construction with feet, cast feet are standard.
2) For types of construction with feet, screwed-on feet are standard.
3) Not generally possible for motors with feet.

© Siemens AG 2015

Selection and ordering data

Special versions	Additional identification code **-Z** with order code and plain text if required	Motor category							
		Motor version	**Motor type (alum.)**	**Motor type – Frame size**					
				80	**90**	**100**	**112**	**132**	**160**
		Ex t (Zone 21/22) Ex n (Zone 2) IE1 Standard Efficiency	1MB10.2	**1MB10.2**					
		Ex t (Zone 21/22) Ex n (Zone 2) IE2 High Efficiency	1MB10.1	**1MB10.1**					
		Ex t (Zone 21/22) Ex n (Zone 2) IE3 Premium Efficiency	1MB10.3	**1MB10.3**					
1MB10 . . - . . . . . - . . . . -Z	Order code	Motor version	Motor type	Frame size					
				80	90	100	112	132	160
Design for Zones according to ATEX									
Version (IP55) for Zones 2 and 22, for non-conductive dust [1]	**B30**	Zone 2 Ex n	1MB103	✓	✓	✓	✓	✓	✓
Version for Zone 2 in Ex nA IIB T3 Gc	**B31**	Zone 2 Ex n	1MB103	○	○	○	○	○	○
VIK version	**C02**	Zone 2 Ex n IE2 High Efficiency IE3 Premium Efficiency	1MB1031 1MB1033	✓	✓	✓	✓	✓	✓
Motor connection and terminal box									
External grounding		All	All	◘	◘	◘	◘	◘	◘
Rotation of the terminal box through 90°, entry from DE	**R10**	All	All	○	○	○	○	○	○
Rotation of the terminal box through 90°, entry from NDE	**R11**	All	All	○	○	○	○	○	○
Rotation of the terminal box through 180°	**R12**	All	All	○	○	○	○	○	○
Cable gland, maximum configuration, certified according to ATEX	**R18**	All	All	✓	✓	✓	✓	✓	✓
Larger terminal box	**R50**	All	All	◘	◘	–	–	–	–
Windings and insulation									
Temperature class 155 (F), utilized acc. to 130 (B), coolant temperature 45 °C, derating approx. 4 % [2]	**N05**	All	All	✓	✓	✓	✓	✓	✓
Temperature class 155 (F), utilized acc. to 130 (B), coolant temperature 50 °C, derating approx. 8 % [2]	**N06**	All	All	✓	✓	✓	✓	✓	✓
Temperature class 155 (F), utilized acc. to 130 (B), coolant temperature 55 °C, derating approx. 13 % [2]	**N07**	All	All	✓	✓	✓	✓	✓	✓
Temperature class 155 (F), utilized acc. to 130 (B), coolant temperature 60 °C, derating approx. 18 %	**N08**	All	All	✓	✓	✓	✓	✓	✓
Increased air humidity/temperature with 30 to 60 g water per m^3 of air	**N20**	All	All	✓	✓	✓	✓	✓	✓
Increased air humidity/temperature with 60 to 100 g water per m^3 of air	**N21**	All	All	✓	✓	✓	✓	✓	✓
Temperature class 155 (F), utilized acc. to 130 (B), with higher coolant temperature and/or installation altitude	**Y50** • and specified output, CT .. °C or IA …. m above sea level	All	All	✓	✓	✓	✓	✓	✓
Colors and paint finish									
Special finish in RAL 7030 stone gray		All	All	○	○	◘	◘	◘	◘
Unpainted (only cast-iron parts primed)	**S00**	All	All	○	○	○	○	○	○
Unpainted, only primed	**S01**	All	All	✓	✓	✓	✓	✓	✓
Special finish sea air resistant	**S03**	All	All	✓	✓	✓	✓	✓	✓
Top coat polyurethane [12]	**S06** *New!*	All	1MB103	✓	✓	✓	✓	✓	✓
Finish in other standard RAL colors: RAL 1002, 1013, 1015, 1019, 2003, 2004, 3000, 3007, 5007, 5009, 5010, 5012, 5015, 5017, 5018, 5019, 6011, 6019, 6021, 7000, 7001, 7004, 7011, 7016, 7022, 7031, 7032, 7033, 7035, 9001, 9002, 9005 (see Catalog Section 1 "Introduction")	**Y53** • *New!* and finish RAL ….	All	All	✓	✓	✓	✓	✓	✓
Finish in special RAL colors: For RAL colors, see "Special finish in special RAL colors" (see Catalog 1 "Introduction")	**Y56** • *New!* and finish RAL ….	All	All	✓	✓	✓	✓	✓	✓

For legends and footnotes, see Page 4/33.

© Siemens AG 2015

Supplements to article numbers and special versions
SIMOTICS XP 1MB1 Explosion-Proof Motors

Options · Aluminum series 1MB10

Special versions	Additional identification code **-Z** with order code and plain text if required	Motor category							
		Motor version	**Motor type (alum.)**	**Motor type – Frame size**					
				80	**90**	**100**	**112**	**132**	**160**
		Ex t (Zone 21/22) Ex n (Zone 2) IE1 Standard Efficiency	1MB10.2	**1MB10.2**					
		Ex t (Zone 21/22) Ex n (Zone 2) IE2 High Efficiency	1MB10.1	**1MB10.1**					
		Ex t (Zone 21/22) Ex n (Zone 2) IE3 Premium Efficiency	1MB10.3	**1MB10.3**					
1MB10 . . - . . . . . - . . . . -Z	Order code	Motor version	Motor type	Frame size					
				80	90	100	112	132	160
Mechanical design and degrees of protection									
Low-noise version for 2-pole motors with clockwise direction of rotation	**F77**	All	All	–	–	–	–	✓	✓
Low-noise version for 2-pole motors with counter-clockwise direction of rotation	**F78**	All	All	–	–	–	–	✓	✓
Protective cover	**H00**	All	All	✓	✓	✓	✓	✓	✓
Vibration-proof version; vibration resistance to Class 3M4 according to IEC 60721-3-3	**H02**	All	All	✓	✓	✓	✓	✓	✓
Condensation drainage holes sealed [6]	**H03**	All	All	✓	✓	✓	✓	✓	✓
Rust-resistant screws (externally)	**H07**	All	All	✓	✓	✓	✓	✓	✓
IP65 degree of protection [4]	**H20**	Ex n (Zone 2)	1MB103	✓	✓	✓	✓	✓	✓
IP56 degree of protection [5]	**H22**	Ex n (Zone 2)	1MB103	✓	✓	✓	✓	✓	✓
Drive-end seal for flange-mounting motors, oil-tight to 0.1 bar [3]	**H23**	All	All	✓	✓	✓	✓	✓	✓
Coolant temperature and installation altitude									
Coolant temperature –40 °C to +40 °C	**D03**	All	All	✓	✓	✓	✓	✓	✓
Designs in accordance with standards and specifications									
Ex certificate EAC for the Eurasian customs union	**D35** *New!*	All	All	–	–	✓	✓	✓	✓
IECEx certification	**D37**	All	All	✓	✓	–	–	–	–
Bearings and lubrication									
Located bearing DE	**L20**	All	All	✓	✓	✓	✓	✓	✓
Located bearing NDE	**L21**	All	All	✓	✓	✓	✓	✓	□
Bearing design for increased cantilever forces [13]	**L22**	All	All	–	–	✓	✓	✓	✓
Regreasing device	**L23**	All	All	–	–	✓	✓	✓	✓
Deep-groove bearings reinforced at both ends for DE and NDE, bearing size 63	**L25**	All	All	–	–	✓	✓	✓	✓
Measuring nipple for SPM shock pulse measurement for bearing inspection	**Q01**	All	All	–	–	✓	✓	✓	✓
Balance and vibration quantity									
Vibration quantity level A		All	All	□	□	□	□	□	□
Vibration quantity level B	**L00**	All	All	✓	✓	✓	✓	✓	✓
Half-key balancing		All	All	□	□	□	□	□	□
Balancing without key	**L01**	All	All	✓	✓	✓	✓	✓	✓
Full-key balancing	**L02**	All	All	✓	✓	✓	✓	✓	✓
Shaft and rotor									
Shaft extension with standard dimensions, without feather keyway	**L04**	All	All	–	–	✓	✓	✓	✓
Standard cylindrical shaft extension	**L05**	All	All	✓	✓	✓	✓	✓	✓
Standard shaft made of stainless steel (e.g. 1.4021)	**L06**	All	All	✓	✓	✓	✓	✓	✓
Concentricity of shaft extension in accordance with DIN 42955 Tolerance R	**L07**	All	All	✓	✓	✓	✓	✓	✓
Concentricity of shaft extension, coaxiality and linear movement in accordance with DIN 42955 Tolerance R for flange-mounting motors	**L08**	All	All	✓	✓	✓	✓	✓	✓
Non-standard cylindrical shaft extension DE 7)	**Y58** • and customer specifications	All	All	✓	✓	✓	✓	✓	✓
Non-standard cylindrical shaft extension NDE 7)	**Y59** • and customer specifications	All	All	✓	✓	✓	✓	✓	✓
Heating and ventilation									
Sheet metal fan cover		All	All	□	□	□	□	□	□
Metal external fan [8]	**F76**	Ex n (Zone 2)	1MB103	□	□	✓	✓	✓	✓
Anti-condensation heating for 230 V [9]	**Q02**	All	All	✓	✓	✓	✓	✓	✓
Anti-condensation heating for 115 V [9]	**Q03**	All	All	✓	✓	✓	✓	✓	✓

For legends and footnotes, see Page 4/33.

© Siemens AG 2015

Special versions	Additional identification code **-Z** with order code and plain text if required	Motor category							
		Motor version	**Motor type (alum.)**	**Motor type – Frame size**					
				80	**90**	**100**	**112**	**132**	**160**
		Ex t (Zone 21/22) Ex n (Zone 2) IE1 Standard Efficiency	1MB10.2	**1MB10.2**					
		Ex t (Zone 21/22) Ex n (Zone 2) IE2 High Efficiency	1MB10.1	**1MB10.1**					
		Ex t (Zone 21/22) Ex n (Zone 2) IE3 Premium Efficiency	1MB10.3	**1MB10.3**					
1MB10 . . - . . . . . - . . . . -Z	Order code	Motor version	Motor type	Frame size					
				80	90	100	112	132	160
Rating plate and extra rating plates									
Second rating plate, loose	**M10**	All	All	✓	✓	✓	✓	✓	✓
Rating plate, stainless steel	**M11**	All	All	✓	✓	✓	✓	✓	✓
Extra rating plate or rating plate with deviating rating plate data	**Y80** • and customer specifications	All	All	✓	✓	✓	✓	✓	✓
Extra rating plate with identification codes	**Y82** • and customer specifications	All	All	✓	✓	✓	✓	✓	✓
Additional information on rating plate and on package label (max. 20 characters)	**Y84** • and customer specifications	All	All	✓	✓	✓	✓	✓	✓
Packaging, safety notes, documentation and test certificates									
Printed Operating Instructions (Compact) for explosion-proof motors enclosed in English and German [11]		All	All	◘	◘	◘	◘	◘	◘
Acceptance test certificate 3.1 according to EN 10204 [10]	**B02**	All	All	✓	✓	✓	✓	✓	✓
Printed German/English operating instructions enclosed	**B04**	All	All	✓	✓	✓	✓	✓	✓
Type test with heat run for horizontal motors, with acceptance	**B83**	All	All	✓	✓	✓	✓	✓	✓
Wire-lattice pallet packaging	**B99**	All	All	○	○	○	○	○	○
Connected in star for dispatch	**M01**	All	All	–	–	✓	✓	✓	✓
Connected in delta for dispatch	**M02**	All	All	–	–	✓	✓	✓	✓
Printed Operating Instructions (Compact) for explosion-proof motors enclosed in other official EU languages [11]	**Y98** • and customer specifications	All	All	✓	✓	✓	✓	✓	✓

◘ Standard version
○ Without additional charge
• This order code only determines the price of the version – Additional plain text is required.
✓ With additional charge
– Not possible

1) Please inquire regarding combination with order codes **D03** and **C02**. Not possible in combination with order codes **H20** and **H22**.

2) There is no derating in combination with order codes **M2A**, **M2B**, **M2C**, **M2D**, **M2E**, **M2F**, **M2G**, **M2H**.

3) Not possible for type of construction IM V3.

4) For Zone 21, IP65 degree of protection is standard. Not possible for Zone 22, because only IP55 degree of protection is required.

5) Not admissible for Zone 21 (IP65 degree of protection) and Zone 22 (IP55 degree of protection).

6) Supplied with the condensation drainage holes sealed at the drive end DE and non-drive end NDE (IP55, IP56, IP65). If the condensation drainage holes are required for motors of the IM B6, IM B7 or IM B8 type of construction (feet on side or top), the motors must be ordered in the respective type of construction and with order code **H03**, so that the condensation drainage holes will be placed in the correct position.

7) When motors are ordered that have a longer or shorter shaft extension than normal, the required position and length of the feather keyway must be specified in a sketch. It must be ensured that only feather keys in accordance with DIN 6885, Form A are permitted to be used. The feather keyway is positioned centrally on the shaft extension. The length is defined by the manufacturer in accordance with the appropriate standard. Not valid for: Conical shafts, non-standard threaded journals, non-standard shaft tolerances, friction welded journals, extremely "thin" shafts, special geometry dimensions (e.g. square journals), hollow shafts. Valid for non-standard shaft extensions DE or NDE. The feather keys are supplied in every case. For order codes **Y58**, **Y59** and **L05**:
– Dimensions D and DA ≤ Inner diameter of roller bearing (see dimension tables under "Dimensions")
– Dimensions E and EA ≤ 2 × Length E (normal) of the shaft extension
For explanation of the order codes, see Section 1 "Introduction".

8) The metal external fan is not possible in combination with the low-noise version – order code **F77** or **F78**.

9) Order codes **Q02** and **Q03** are not possible for frame sizes 100 to 160 in combination with 15th position of Article No. "**H**".
It can only be supplied with a star or delta winding for direct switch-on (3 terminals).

10) The delivery time for the acceptance test certificate may differ from the delivery time for the motor.

11) The Operating Instructions (Compact) are available in PDF format for all official EU languages at
http://support.automation.siemens.com/WW/view/en/10803948/133300

12) Order code **S06** cannot be combined with order code **S00** and **S01**. It can be combined with **Y53** and **Y56** on request.

13) A minimum cantilever force F_{min} of 0.5 · F_{max} is required for NU bearings (cylindrical roller bearings) in contrast to bearings. Cylindrical roller bearings are not suitable for coupling output or for brief periods of no-load operation without cantilever force.

© Siemens AG 2015

Selection and ordering data

Special versions	Additional identification code **-Z** with order code and plain text if required	Motor category										
		Motor version	**Motor type (cast-iron)**	**Motor type – Frame size**								
				100	**112**	**132**	**160**	**180**	**200**	**225**	**250**	**280**	**315**
		Ex t (Zone 21/22) Ex n (Zone 2) IE2 High Efficiency	1MB15.1	**1MB15.1 Basic Line**									
			1MB16.1	**1MB16.1 Performance Line**									
		Ex t (Zone 21/22) Ex n (Zone 2) IE3 Premium Efficiency	1MB15.3	**1MB15.3 Basic Line**									
			1MB16.3	**1MB16.3 Performance Line**									
1MB15 . . - . . . . . - . . . . -Z		Motor version	Motor type	Frame size									
1MB16 . . - . . . . . - . . . . -Z	Order code			100	112	132	160	180	200	225	250	280	315
Design for Zones according to ATEX													
Version (IP55) for Zones 2 and 22, for non-conductive dust [1]	**B30**	Zone 2 Ex n	1MB1.3	✓	✓	✓	✓	✓	✓	✓	✓	✓	✓
Version for Zone 2 in Ex nA IIB T3 Gc	**B31**	Zone 2 Ex n	1MB1.3	○	○	○	○	○	○	○	○	○	○
VIK version	**C02** (1MB153 and 1MB163 with Ex n marking)	Zone 2 Ex n	1MB1.3	✓	✓	✓	✓	✓	✓	✓	✓	✓	✓
Motor protection (bearing protection)													
Installation of 2 Pt100 screw-in resistance thermometers in basic circuit for monitoring bearing temperature with rolling-contact bearings [2] [3]	**Q72**	All	All	–	–	–	–	✓	✓	✓	✓	✓	✓
Installation of 2 Pt100 screw-in resistance thermometers in 3-wire circuit for monitoring bearing temperature with rolling-contact bearings [2] [3]	**Q78**	All	All	–	–	–	–	✓	✓	✓	✓	✓	✓
Installation of 2 Pt100 double screw-in resistance thermometers in 3-wire circuit for monitoring bearing temperature with rolling-contact bearings [2] [3]	**Q79**	All	All	–	–	–	–	–	–	–	–	✓	✓
Motor connection and terminal box													
External grounding		All	All	◘	◘	◘	◘	◘	◘	◘	◘	◘	◘
Rotation of the terminal box through 90°, entry from DE	**R10**	All	All	○	○	○	○	✓	✓	✓	✓	✓	✓
Rotation of the terminal box through 90°, entry from NDE	**R11**	All	All	○	○	○	○	✓	✓	✓	✓	✓	✓
Rotation of the terminal box through 180°	**R12**	All	All	○	○	○	○	✓	✓	✓	✓	✓	✓
Stud terminals for cable connection, accessories pack (3 items)	**R17**	Zone 21 Ex tb Zone 22 Ex tc	1MB1.1 1MB1.2	–	–	–	–	–	–	–	✓	✓	✓
Cable gland, maximum configuration, certified according to ATEX	**R18**	All	All	✓	✓	✓	✓	✓	✓	✓	✓	✓	✓
Saddle terminals for connection without cable lug, accessories pack (6 items)	**R19**	Zone 21 Ex tb Zone 22 Ex tc	1MB1.1 1MB1.2	–	–	–	–	–	–	–	✓	✓	✓
		Zone 2 Ex n	1MB1.3	◘	◘	◘	◘	◘	◘	◘	◘	◘	◘
Larger terminal box	**R50**	All	All	✓	✓	✓	✓	✓	✓	✓	✓	✓	✓
Cast-iron auxiliary terminal box (small)	**R62**	All	All	–	–	–	–	✓	✓	✓	✓	✓	✓
Windings and insulation													
Temperature class 155 (F), utilized acc. to 130 (B), coolant temperature 45 °C, derating approx. 4 % [4]	**N05**	All	All	✓	✓	✓	✓	✓	✓	✓	✓	✓	✓
Temperature class 155 (F), utilized acc. to 130 (B), coolant temperature 50 °C, derating approx. 8 % [4]	**N06**	All	All	✓	✓	✓	✓	✓	✓	✓	✓	✓	✓
Temperature class 155 (F), utilized acc. to 130 (B), coolant temperature 55 °C, derating approx. 13 % [4]	**N07**	All	All	✓	✓	✓	✓	✓	✓	✓	✓	✓	✓
Temperature class 155 (F), utilized acc. to 130 (B), coolant temperature 60 °C, derating approx. 18 %	**N08**	All	All	✓	✓	✓	✓	✓	✓	✓	✓	✓	✓
Increased air humidity/temperature with 30 to 60 g water per m^3 of air	**N20**	All	All	✓	✓	✓	✓	✓	✓	✓	✓	✓	✓
Increased air humidity/temperature with 60 to 100 g water per m^3 of air	**N21**	All	All	✓	✓	✓	✓	✓	✓	✓	✓	✓	✓
Temperature class 155 (F), utilized acc. to 130 (B), with higher coolant temperature and/or installation altitude	**Y50** • and specified output, CT .. °C or IA .... m above sea level	All	All	✓	✓	✓	✓	✓	✓	✓	✓	✓	✓

For legends and footnotes, see Page 4/37.

© Siemens AG 2015

Special versions	Additional identification code **-Z** with order code and plain text if required	Motor category										
		Motor version	**Motor type (cast-iron)**	**Motor type – Frame size**								
				100	**112**	**132**	**160**	**180**	**200**	**225**	**250**	**280**	**315**
		Ex t (Zone 21/22) Ex n (Zone 2) IE2 High Efficiency	1MB15.1	**1MB15.1 Basic Line**									
			1MB16.1	**1MB16.1 Performance Line**									
		Ex t (Zone 21/22) Ex n (Zone 2) IE3 Premium Efficiency	1MB15.3	**1MB15.3 Basic Line**									
			1MB16.3	**1MB16.3 Performance Line**									
1MB15 . . - . . . . . - . . . . -Z **1MB16 . . - . . . . . - . . . . -Z**	Order code	Motor version	Motor type	Frame size 100	112	132	160	180	200	225	250	280	315
Colors and paint finish													
Standard finish in RAL 7030 stone gray		All	1MB15	◘	◘	◘	◘	◘	◘	◘	◘	◘	◘
Unpainted (only cast-iron parts primed)	**S00**	All	All	○	○	○	○	○	○	○	○	○	○
Unpainted, only primed	**S01**	All	All	✓	✓	✓	✓	✓	✓	✓	✓	✓	✓
Special finish	**S02** *New!*	All	1MB15	✓	✓	✓	✓	✓	✓	✓	✓	✓	✓
		All	1MB16	◘	◘	◘	◘	◘	◘	◘	◘	◘	◘
Special finish sea air resistant	**S03**	All	All	✓	✓	✓	✓	✓	✓	✓	✓	✓	✓
Special paint for use offshore	**S04**	All	All	✓	✓	✓	✓	✓	✓	✓	✓	✓	✓
Top coat polyurethane [12]	**S06** *New!*	All	1MB153 1MB163	✓	✓	✓	✓	✓	✓	✓	✓	✓	✓
Finish in other standard RAL colors: RAL 1002, 1013, 1015, 1019, 2003, 2004, 3000, 3007, 5007, 5009, 5010, 5012, 5015, 5017, 5018, 5019, 6011, 6019, 6021, 7000, 7001, 7004, 7011, 7016, 7022, 7031, 7032, 7033, 7035, 9001, 9002, 9005 (see Catalog Section 1 "Introduction")	**Y53 •** and finish in RAL ….	All	1MB15	–	–	–	–	✓	✓	✓	✓	✓	✓
Finish in special RAL colors: For RAL colors, see "Special finish in special RAL colors" (see Catalog Section 1 "Introduction")	**Y56 •** *New!* and finish RAL ….	All	All	✓	✓	✓	✓	✓	✓	✓	✓	✓	✓
Mechanical design and degrees of protection													
Low-noise version for 2-pole motors with clockwise direction of rotation	**F77**	All	All	–	–	✓	✓	✓	✓	✓	✓	✓	✓
Low-noise version for 2-pole motors with counter-clockwise direction of rotation	**F78**	All	All	–	–	✓	✓	✓	✓	✓	✓	✓	✓
Protective cover	**H00**	All	All	✓	✓	✓	✓	✓	✓	✓	✓	✓	✓
Vibration-proof version; vibration resistance to Class 3M4 according to IEC 60721-3-3	**H02**	All	All	✓	✓	✓	✓	✓	✓	✓	✓	◘	◘
Condensation drainage holes [7]		All	All	◘	◘	◘	◘	◘	◘	◘	◘	◘	◘
Rust-resistant screws (externally)	**H07**	All	All	✓	✓	✓	✓	✓	✓	✓	✓	✓	✓
IP65 degree of protection [5]	**H20**	Ex n (Zone 2)	1MB1.3	✓	✓	✓	✓	✓	✓	✓	✓	✓	✓
IP56 degree of protection [6]	**H22**	Ex n (Zone 2)	1MB1.3	✓	✓	✓	✓	✓	✓	✓	✓	✓	✓
Drive-end seal for flange-mounting motors, oil-tight to 0.1 bar Not possible for type of construction IM V3	**H23**	All	All	✓	✓	✓	✓	✓	✓	✓	✓	✓	✓
Coolant temperature and installation altitude													
Coolant temperature –40 °C to +40 °C	**D03**	All	All	✓	✓	✓	✓	✓	✓	✓	✓	✓	✓
Designs in accordance with standards and specifications													
Ex certificate EAC for the Eurasian customs union [13]	**D35** *New!*	All	All	✓	✓	✓	✓	✓	✓	✓	✓	✓	✓
IECEx certification	**D37**	All	All	✓	✓	✓	✓	✓	✓	✓	✓	✓	✓
Bearings and lubrication													
Regreasing device with M10X1 grease nipple according to DIN 71412-A	**L19** *New!*	All	All	–	–	–	–	✓	✓	✓	✓	○	○
Located bearing DE	**L20**	All	All	✓	✓	✓	✓	✓	✓	✓	✓	✓	✓
Located bearing NDE	**L21**	All	All	✓	✓	✓	◘	◘	◘	◘	◘	◘	◘
Bearing design for increased cantilever forces [14]	**L22**	All	All	✓	✓	✓	✓	✓	✓	✓	✓	✓	✓
Regreasing device	**L23**	All	1MB15	✓	✓	✓	✓	✓	✓	✓	✓	◘	◘
		All	1MB16	✓	✓	✓	◘	◘	◘	◘	◘	◘	◘
Deep-groove bearings reinforced at both ends for DE and NDE, bearing size 63	**L25**	All	1MB15	✓	✓	✓	✓	✓	✓	✓	✓	◘	◘
		All	1MB16	◘	◘	◘	◘	◘	◘	◘	◘	◘	◘
Measuring nipple for SPM shock pulse measurement for bearing inspection	**Q01**	All	All	✓	✓	✓	✓	✓	✓	✓	✓	✓	✓

For legends and footnotes, see Page 4/37.

© Siemens AG 2015

Options · Cast-iron series 1MB15 Basic Line, 1MB16 Performance Line

Special versions	Additional identification code **-Z** with order code and plain text if required	Motor category										
		Motor version	**Motor type (cast-iron)**	**Motor type – Frame size**								
				100	**112**	**132**	**160**	**180**	**200**	**225**	**250**	**280**	**315**
		Ex t (Zone 21/22) Ex n (Zone 2) IE2 High Efficiency	1MB15.1	**1MB15.1 Basic Line**									
			1MB16.1	**1MB16.1 Performance Line**									
		Ex t (Zone 21/22) Ex n (Zone 2) IE3 Premium Efficiency	1MB15.3	**1MB15.3 Basic Line**									
			1MB16.3	**1MB16.3 Performance Line**									
1MB15 . . - . . . . . - . . . . -Z		Motor version	Motor type	Frame size									
1MB16 . . - . . . . . - . . . . -Z	Order code			100	112	132	160	180	200	225	250	280	315
Balance and vibration quantity													
Vibration quantity level A		All	All	□	□	□	□	□	□	□	□	□	□
Vibration quantity level B	**L00**	All	All	✓	✓	✓	✓	✓	✓	✓	✓	✓	✓
Half-key balancing		All	All	□	□	□	□	□	□	□	□	□	□
Balancing without feather key, feather key is supplied	**L01**	All	All	✓	✓	✓	✓	✓	✓	✓	✓	✓	✓
Full-key balancing	**L02**	All	All	✓	✓	✓	✓	✓	✓	✓	✓	✓	✓
Shaft and rotor													
Shaft extension with standard dimensions, without feather keyway	**L04**	All	All	✓	✓	✓	✓	✓	✓	✓	✓	✓	✓
Standard cylindrical shaft extension	**L05**	All	All	✓	✓	✓	✓	✓	✓	✓	✓	✓	✓
Standard shaft made of stainless steel (e.g. 1.4021)	**L06**	All	All	✓	✓	✓	✓	✓	✓	✓	✓	✓	✓
Concentricity of shaft extension in accordance with DIN 42955 Tolerance R	**L07**	All	All	✓	✓	✓	✓	✓	✓	✓	✓	✓	✓
Concentricity of shaft extension, coaxiality and linear movement in accordance with DIN 42955 Tolerance R for flange-mounting motors	**L08**	All	All	✓	✓	✓	✓	✓	✓	✓	✓	✓	✓
Non-standard cylindrical shaft extension DE [8]	**Y58** • and customer specifications	All	All	✓	✓	✓	✓	✓	✓	✓	✓	✓	✓
Non-standard cylindrical shaft extension NDE [8]	**Y59** • and customer specifications	All	All	✓	✓	✓	✓	✓	✓	✓	✓	✓	✓
Heating and ventilation													
Sheet metal fan cover		All	All	□	□	□	□	□	□	□	□	□	□
Metal external fan [9]	**F76**	Ex n (Zone 2)	1MB1.3	✓	✓	✓	✓	✓	✓	✓	✓	✓	✓
Anti-condensation heating for 230 V [3]	**Q02**	All	All	✓	✓	✓	✓	✓	✓	✓	✓	✓	✓
Anti-condensation heating for 115 V [3]	**Q03**	All	All	✓	✓	✓	✓	✓	✓	✓	✓	✓	✓
Rating plate and extra rating plates													
Second rating plate, loose	**M10**	All	All	✓	✓	✓	✓	✓	✓	✓	✓	✓	✓
Rating plate, stainless steel	**M11**	All, Performance Line without additional charge		✓	✓	✓	✓	✓	✓	✓	✓	✓	✓
Extra rating plate or rating plate with deviating rating plate data	**Y80** • and customer specifications	All	All	✓	✓	✓	✓	✓	✓	✓	✓	✓	✓
Extra rating plate with identification codes	**Y82** • and customer specifications	All	All	✓	✓	✓	✓	✓	✓	✓	✓	✓	✓
Additional information on rating plate and on package label (max. 20 characters)	**Y84** • and customer specifications	All	All	✓	✓	✓	✓	✓	✓	✓	✓	✓	✓
Packaging, safety notes, documentation and test certificates													
Printed Operating Instructions (Compact) for explosion-proof motors enclosed in English and German [11]		All	All	□	□	□	□	□	□	□	□	□	□
Acceptance test certificate 3.1 according to EN 10204 [10]	**B02**	All	All	✓	✓	✓	✓	✓	✓	✓	✓	✓	✓
Printed German/English Operating Instructions enclosed	**B04**	All	All	✓	✓	✓	✓	✓	✓	✓	✓	✓	✓
Type test with heat run for horizontal motors, with acceptance	**B83**	All	All	✓	✓	✓	✓	✓	✓	✓	✓	✓	✓
Wire-lattice pallet packaging	**B99**	All	All	○	○	○	○	–	–	–	–	–	–
Connected in star for dispatch	**M01**	All	All	✓	✓	✓	✓	✓	✓	✓	✓	✓	✓
Connected in delta for dispatch	**M02**	All	All	✓	✓	✓	✓	✓	✓	□	□	□	□
Printed Operating Instructions (Compact) for explosion-proof motors enclosed in other official EU languages [11]	**Y98** • and customer specifications	All	All	✓	✓	✓	✓	✓	✓	✓	✓	✓	✓

For legends and footnotes, see Page 4/37.

© Siemens AG 2015

◘	Standard version
○	Without additional charge
•	This order code only determines the price of the version – Additional plain text is required.
✓	With additional charge
–	Not possible
Av. soon	Available soon

1) Please inquire regarding combination with order codes D03 and C02. Not possible in combination with order codes **H20** and **H22**.

2) Evaluation with appropriate tripping unit (see Catalog IC 10) is recommended. A certified tripping unit is necessary for use in hazardous areas.

3) Order codes **Q02** and **Q03** are not possible for frame sizes 100 to 160 in combination with 15th position of Article No. "**H**". It can only be supplied with a star or delta winding for direct switch-on (3 terminals).

4) There is no derating in combination with order codes **M2A**, **M2B**, **M2C**, **M2D**, **M2E**, **M2F**, **M2G**, **M2H**.

5) Order code **H20** (IP65 degree of protection) can only be ordered for Zone 2. For Zone 21, IP65 degree of protection is standard. Not possible for Zone 22, because only IP55 degree of protection is required.

6) Order code **H22** IP56 degree of protection is only possible for Zone 2. Degree of protection IP56 is not permissible for Zone 21 (IP65 degree of protection) and Zone 22 (IP55 degree of protection).

7) Supplied with the condensation drainage holes sealed at the drive end DE and non-drive end NDE (IP55, IP56, IP65). If the condensation drainage holes are required for motors of the IM B6, IM B7 or IM B8 type of construction (feet on side or top), the motors must be ordered in the respective type of construction and with order code **H03**, so that the condensation drainage holes will be placed in the correct position.

8) When motors are ordered that have a longer or shorter shaft extension than normal, the required position and length of the feather keyway must be specified in a sketch. It must be ensured that only feather keys in accordance with DIN 6885, Form A are permitted to be used. The feather keyway is positioned centrally on the shaft extension. The length is defined by the manufacturer in accordance with the appropriate standard. Not valid for: Conical shafts, non-standard threaded journals, non-standard shaft tolerances, friction welded journals, extremely "thin" shafts, special geometry dimensions (e.g. square journals), hollow shafts. Valid for non-standard shaft extensions DE or NDE. The feather keys are supplied in every case.
For order codes **Y58**, **Y59** and **L05**:
– Dimensions D and DA ≤ Inner diameter of roller bearing (see dimension tables under "Dimensions")
– Dimensions E and EA ≤ 2 × Length E (normal) of the shaft extension
For explanation of the order codes, see Section 1 "Introduction".

9) The metal external fan is not possible in combination with the low-noise version – order code **F77** or **F78**.

10) The delivery time for the factory test certificate may differ from the delivery time for the motor.

11) The Operating Instructions (Compact) are available in PDF format for all official EU languages at
http://support.automation.siemens.com/WW/view/en/10803948/133300

12) Order code **S06** cannot be combined with order code **S00**, **S01** and **S02**. It can be combined with **Y53** and **Y56** on request.

13) Not permissible for 1MB15/6 motors in type of protection Ex tb (Zone 21) for frame sizes > 200.

14) A minimum cantilever force F_{min} of 0.5 · F_{max} is required for NU bearings (cylindrical roller bearings) in contrast to bearings. Cylindrical roller bearings are not suitable for coupling output or for brief periods of no-load operation without cantilever force.

© Siemens AG 2015

Overview

Couplings for use in hazardous areas

The motor from Siemens is connected to the machine or gear unit through a coupling. Siemens is an important coupling manufacturer with a wide range of products.

For standard applications, Siemens recommends that flexible couplings, types N-EUPEX and RUPEX or torsionally rigid couplings, types ARPEX and ZAPEX are used. For special applications, FLUDEX and ELPEX-S couplings are recommended. These coupling types are suitable for use in areas subject to explosion hazards and are offered with declaration of conformity and type test certificate according to Directive 94/9/EC.

Available from:

Siemens contact partner - ordering from catalog
Siemens MD 10.1 "FLENDER Standard Couplings"

or

SIEMENS AG
Kupplungswerk Mussum
Industriepark Bocholt
Schlavenhorst 100
46395 Bocholt, Germany
Tel. +49 (2871) 922185
Fax +49 (2871) 922579

www.siemens.com
E-mail: flendercouplings@siemens.com

Taper pins to DIN 258 with threaded ends and constant taper lengths

Taper pins are used for components that are repeatedly removed. The drilled hole is ground conical using a conical reamer until the pin can be pushed in by hand until the cone shoulder lies approx. 3 to 4 mm above the rim of the hole.

It can then be driven in using a hammer until it is correctly seated. The pin is removed from the drilled hole by screwing on the nut and tightening it.

Standardized taper pins are available from general engineering suppliers.

Available from:

Otto Roth GmbH & Co. KG
Rutesheimer Strasse 22
70499 Stuttgart, Germany
Tel. +49 (711) 1388-0
Fax. +49 (711) 1388-233

www.ottoroth.de
E-mail: info@ottoroth.de

Foundation block acc. to DIN 799

The foundation blocks are inserted into the stone foundation and embedded in concrete. They are used for fixing machines of medium size, slide rails, pedestal bearings, baseframes, etc. After the fixing bolts have been unscrewed, the machine can be dragged without it having to be lifted.

When the machine is initially installed, the foundation block that is bolted to the machine (without washers) and fitted with taper pins is not embedded with concrete until the machine has been fully aligned. In this case, the machine is positioned 2 to 3 mm lower. The difference in shaft height is compensated by inserting shims on final installation. The taper pins safeguard the exact position of the machine when it is repeatedly removed and replaced without the need for realignment.

Available from:

Lütgert & Co. GmbH
Postfach 42 51
33276 Gütersloh, Germany
Tel. +49 (5241) 7407-0
Fax +49 (5241) 7407-90

www.luetgert-antriebe.de
E-mail: info@luetgert-antriebe.de

Slide rails with fixing bolts and tensioning screws according to DIN 42923

Slide rails are used to tension the belt of a machine easily and conveniently when a belt tightener is not available. They are fixed to the base using stone bolts or foundation blocks.

The assignment of slide rails to motor size can be found in DIN 42923. For motors of frame sizes 355 to 450, there are no standardized slide rails (please inquire).

Available from:

Lütgert & Co. GmbH
Postfach 42 51
33276 Gütersloh, Germany
Tel. +49 (5241) 7407-0
Fax +49 (5241) 7407-90

www.luetgert-antriebe.de
E-mail: info@luetgert-antriebe.de

© Siemens AG 2015

More information

Spare motors and repair parts

- Supply commitment for spare motors and repair parts following delivery of the motor:
  - For up to 3 years, in the event of total motor failure, Siemens will supply a comparable motor with regard to the mounting dimensions and functions (the type series may vary).
  - Spare parts will be available for up to five years.
  - Within the time period of up to five years, Siemens will provide information about spare parts and will supply documents when required.
  - Replacement motors delivered after the active production of the machine series are also identified with "Spare motor" on the rating plate. Spare parts are offered only on request for these motors.
- When repair parts are ordered, the following details must be provided:
  - Designation and part number
  - Article No. and factory number of the motor.
- For bearing types, see Catalog Section 1 "Introduction".
- Repair parts are available for 1MB1 motors on request.
- For standard components, a supply commitment does not apply.
- Support – Hotline
  In Germany
  Tel.: +49 (180) 5050448

You will find telephone numbers for other countries on our Internet site:
www.siemens.com/automation/service&support

© Siemens AG 2015

Overall dimensions

Overview

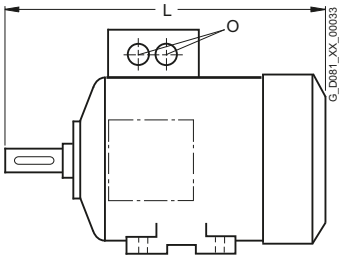

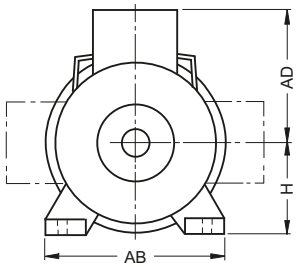

Frame size	Type	Dimension L	AD	H	AB	O
80 M	Aluminum series, self-ventilated					
	1MB101, 1MB102 1MB103	292	149	80	150	1 x M16 x 1.5 1 x M25 x 1.5
90 S/L	Aluminum series, self-ventilated					
	1MB101, 1MB102, 1MB103	347	154	90	165	1 x M16 x 1.5 1 x M25 x 1.5
100 L	Aluminum series, self-ventilated					
	1MB1011, 1MB1012, 1MB1021, 1MB1022, 1MB1031, 1MB1032	395.5 [1]	166	100	196	2 × M32 × 1.5
	1MB1013, 1MB1023, 1MB1033	430.5 [1]				
	Cast-iron series, self-ventilated					
	1MB15.., 1MB16..	389	193	100	196	2 × M32 × 1.5
112 M	Aluminum series, self-ventilated					
	1MB1011, 1MB1012, 1MB1021, 1MB1022, 1MB1031, 1MB1032	389 [1]	177	112	226	2 × M32 × 1.5
	1MB1013, 1MB1023, 1MB1033	414 [1]				
	Cast-iron series, self-ventilated					
	1MB15.., 1MB16..	382	195	112	226	2 × M32 × 1.5
132 S/M	Aluminum series, self-ventilated					
	1MB1011, 1MB1012, 1MB1021, 1MB1022, 1MB1031, 1MB1032	465 [1]	202	132	256	2 × M32 × 1.5
	1MB1013-, 1MB1023-, 1MB1033-					
	1CA0, 1CC0, 1CC2	465 [1]				
	1CA1, 1CB0, 1CB2, 1CC3	515 [1]				
	Cast-iron series, self-ventilated					
	1MB15.., 1MB16..	457	215	132	256	2 × M32 × 1.5
160 M/L	Aluminum series, self-ventilated					
	1MB1011, 1MB1012, 1MB1021, 1MB1022, 1MB1031, 1MB1032	604 [1]	236.5	160	300	2 × M40 × 1.5
	1MB1013, 1MB1023, 1MB1033					
	Cast-iron series, self-ventilated					
	1MB15.., 1MB16..	594	265	160	300	2 × M40 × 1.5
180 M	Cast-iron series, self-ventilated					
	1MB15.1-, 1MB16.1-					
	1EA2, 1EB2		668	180	339	2 × M40 × 1.5
	1EA6		698			
	1MB15.3-, 1MB16.3-					
	1EB2		668	180	339	2 × M40 × 1.5
	1EA2		698			
180 L	Cast-iron series, self-ventilated					
	1MB15.1-, 1MB16.1-					
	1EB4, 1EC4, 1EC6		668	180	339	2 × M40 × 1.5
	1EB6		698			
	1MB15.3-, 1MB16.3-					
	1EC4		668	180	339	2 × M40 × 1.5
	1EB4		698			
200 L	Cast-iron series, self-ventilated					
	1MB15.1-, 1MB16.1-					
	2AA4, 2AA5, 2AB5, 2AC4, 2AC5	721	315	200	378	2 × M50 × 1.5
	2AA6	746				
	1MB15.3-, 1MB16.3-					
	2AA4, 2AC4	721	315	200	378	2 × M50 × 1.5
	2AA5, 2AB5, 2AC5	746				

Frame size	Type	Dimension L	AD	H	AB	O
225 S	Cast-iron series, self-ventilated					
	1MB15.1-, 1MB16.1-					
	2BB0, 2BD0	788	338	225	436	2 × M50 × 1.5
	1MB15.3-, 1MB16.3-					
	2BB0	788	338	225	436	2 × M50 × 1.5
225 M	Cast-iron series, self-ventilated					
	1MB15.1-, 1MB16.1-					
	2BA2, 2BA6	818	338	225	436	2 × M50 × 1.5
	2BB2, 2BB6, 2BC2, 2BC6, 2BD6	848				
	1MB15.3-, 1MB16.3-					
	2BA2	818	338	225	436	2 × M50 × 1.5
	2BB2, 2BC2	848				
250 M	Cast-iron series, self-ventilated					
	1MB15.1-, 1MB16.1-					
	2CA2, 2CA6, 2CB2, 2CC2, 2CC6, 2CD2, 2CD6	887	410	250	490	2 × M63 × 1.5
	2CB6	957				
	1MB15.3-, 1MB16.3-					
	2CA2, 2CB2, 2CC2	887	410	250	490	2 × M63 × 1.5
280 S	Cast-iron series, self-ventilated					
	1MB15.1-, 1MB16.1-					
	2DA0, 2DB0, 2DC0, 2DD0	960	433	280	540	2 × M63 × 1.5
	1MB15.3-, 1MB16.3-					
	2DA0, 2DB0, 2DC0	960	433	280	540	2 × M63 × 1.5
280 M	Cast-iron series, self-ventilated					
	1MB15.1-, 1MB16.1-					
	2DA2, 2DB2, 2DC2, 2DC6, 2DD2, 2DD6	960	433	280	540	2 × M63 × 1.5
	2DA6, 2DB6	1070				
	1MB15.3-, 1MB16.3-					
	2DC2	960	433	280	540	2 × M63 × 1.5
	2DA2, 2DB2	1070				
315 S	Cast-iron series, self-ventilated					
	1MB15.1-, 1MB16.1-					
	3AA0	1052	515	315	610	2 × M63 × 1.5
	3AB0, 3AC0, 3AD0	1082				
	1MB15.3-, 1MB16.3-					
	3AA0	1052	515	315	610	2 × M63 × 1.5
	3AB0, 3AC0	1082				
315 M	Cast-iron series, self-ventilated					
	1MB15.1-, 1MB16.1-					
	3AC2, 3AD2	1082	515	315	610	2 × M63 × 1.5
	3AA2	1217				
	3AB2	1247				
	1MB15.3-, 1MB16.3-					
	3AA2	1217	515	315	610	2 × M63 × 1.5
	3AB2, 3AC2	1247				
315 L	Cast-iron series, self-ventilated					
	1MB15.1-, 1MB16.1-					
	3AA4	1217	515	315	610	2 × M63 × 1.5
	3AB4, 3AC4, 3AC5, 3AD4, 3AD5, 3AD6	1247				
	3AA5, 3AA6	1372				
	3AB5, 3AB6, 3AC6	1402				
	1MB15.3-, 1MB16.3-					
	3AA4	1217	515	315	610	2 × M63 × 1.5
	3AB4, 3AC4	1247				
	3AA5	1372				
	3AB5, 3AC5, 3AC6	1402				

© Siemens AG 2015

Overview

Notes on the dimensions

- Dimensional drawings according to EN 50347 and IEC 60072.
- Fits
  The shaft extensions specified in the dimension tables (DIN 748) and centering spigot diameters (EN 50347) are machined with the following fits:

Dimension designation	ISO fit ISO 286-2	
D, DA	to 30	j6
	over 30 to 50	k6
	over 50	m6
N	to 250	j6
	over 250	h6
F, FA		h9
K		H17
S	flange (FF)	H17

  The drilled holes of couplings and belt pulleys should have an ISO fit of at least H7.

- Dimension tolerances
  For the following dimension designations, the admissible deviations are given below:

Dimension designation	Dimension	Admissible deviation
H	to 250	– 0.5
	over 250	– 1.0
E, EA		– 0.5

  Keyways and feather keyways (dimensions GA, GC, F and FA) are made in compliance with DIN 6885 Part 1.
- All dimensions are specified in mm.

Dimension sheet generator

(within the Drive Technology Configurator)

A dimensional drawing can be created in the Drive Technology (DT) Configurator for every configurable motor. A dimensional drawing can be requested for every other motor.

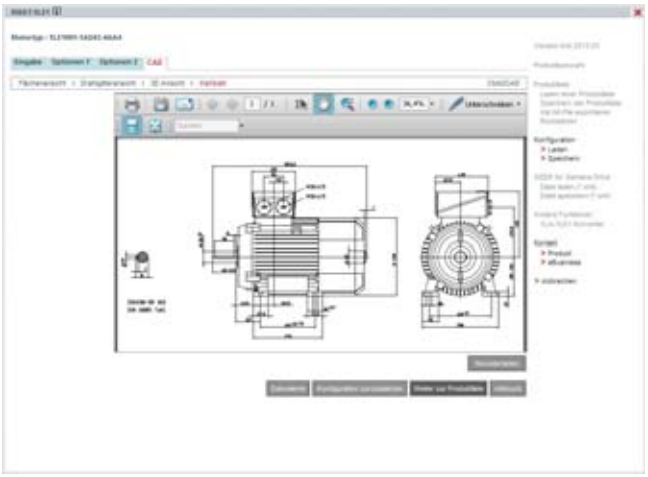

When a complete Article No. is entered with or without order codes, a dimensional drawing can be called up under the "Documentation" tab.

These dimensional drawings can be presented in different views and sections and printed.
The corresponding dimension sheets can be exported, saved and processed further in DXF format (interchange/import format for CAD systems) or as bitmap graphics.

Online access in the Siemens Industry Mall

The DT Configurator is integrated into the Siemens Industry Mall and can be used on the Internet without installation.
English: www.siemens.com/dt-configurator

Offline access in the Interactive Catalog CA 01

The DT Configurator is also part of the Interactive Catalog CA 01 on DVD – the offline version of Siemens Industry Mall. CA 01 can be ordered from the relevant Siemens sales office or via the Internet: www.siemens.com/automation/CA01

© Siemens AG 2015

Dimensional drawings

Type of construction IM B3

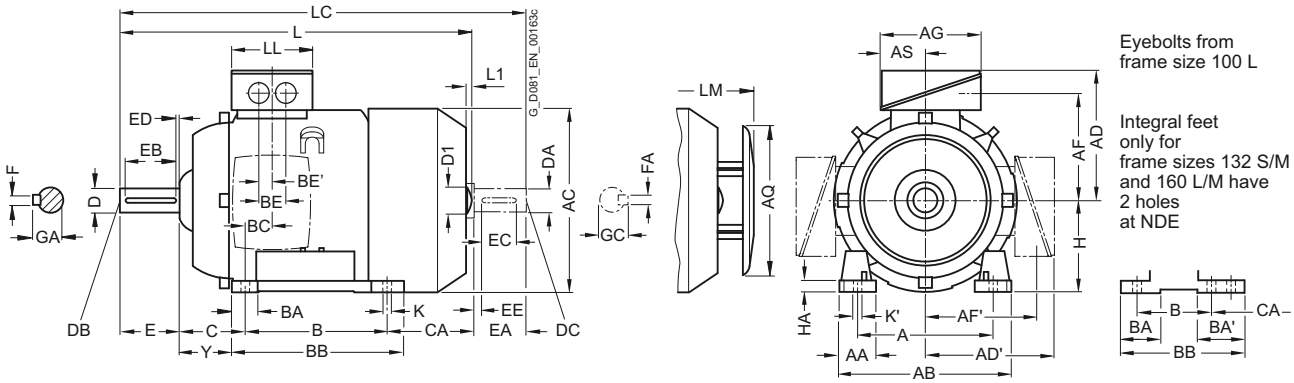

Types of construction IM B5 and IM V1

For flange dimensions, see Page 1/34 (**Z** = the number of retaining holes)

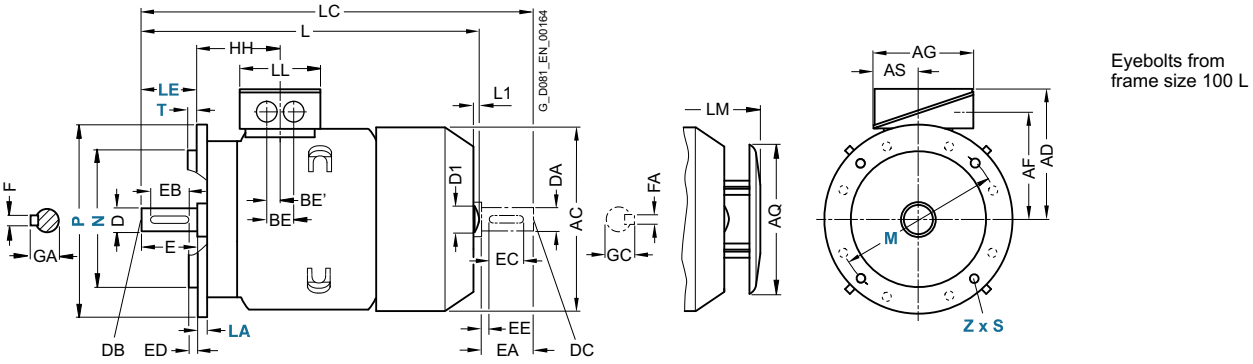

For motor			Dimension designation acc. to **IEC**																					
Frame size	Motor type 1MB10.1, 1MB10.2	No. of poles	A	AA	AB	AC	AD	AD'	AF	AF'	AG	AQ	AS	B*	BA	BA'	BB	BC	BE	BE'	C	CA*	H	HA	Y
80 M	1MB10.1	2, 4, 6	125	30.5	150	159	149	–	96.5	112	119.5	155	61.5	100	32	–	118	23	–	18	50	–	80	8	41
90 S	1MB10.1	2, 4, 6	140	30.5	165	178	154	–	101.5	112	119.5	155	62.5	100	33	–	143	22.5	–	18	56	–	90	10	47
90 L	1MB10.1	2, 4, 6	140	30.5	165	178	154	–	101.5	117	119.5	155	62.5	125	33	–	143	22.5	–	18	56	–	90	10	47
100 L	All	2, 4, 6, 8	160	42	196	198	166	166	125.5	125.5	135	195	63.5	140	37.5	–	176	33.5	50	25	63	141	100	12	45
112 M	All	2, 4, 6, 8	190	46	226	222	177	177	136.5	136.5	135	195	63.5	140	35.4	–	176	26	50	25	70	129.7	112	12	52
132 S	All	2, 4, 6, 8	216	53	256	262	202	202	159.5	159.5	155	260	70.5	140	38	76 [1]	218 [2]	26.5	48	24	89	128.5 [3]	132	15	69
132 M	All	2, 4, 6, 8	216	53	256	262	202	202	159.5	159.5	155	260	70.5	178	38	76	218	26.5	48	24	89	128.5 [3]	132	15	69
160 M	All	2, 4, 6, 8	254	60	300	314	236.5	236.5	190	190	175	260	77.5	210	44	89 [4]	300 [5]	47	57	28.5	108	148 [6]	160	18	85
160 L	All	2, 4, 6, 8	254	60	300	314	236.5	236.5	190	190	175	260	77.5	254	44	89	300	47	57	28.5	108	148 [6]	160	18	85

* This dimension is assigned in EN 50347 to the frame size listed.

1) With screwed-on feet, dimension BA' is 38 mm.

2) With screwed-on feet, dimension BB is 180 mm.

3) With screwed-on feet, dimension CA is 166.5 mm.

4) With screwed-on feet, dimension BA' is 44 mm.

5) With screwed-on feet, dimension BB is 256 mm.

6) With screwed-on feet, dimension CA is 192 mm.

© Siemens AG 2015

Dimensional drawings (continued)

Type of construction IM B35

For flange dimensions, see Page 1/34 (**Z** = the number of retaining holes)

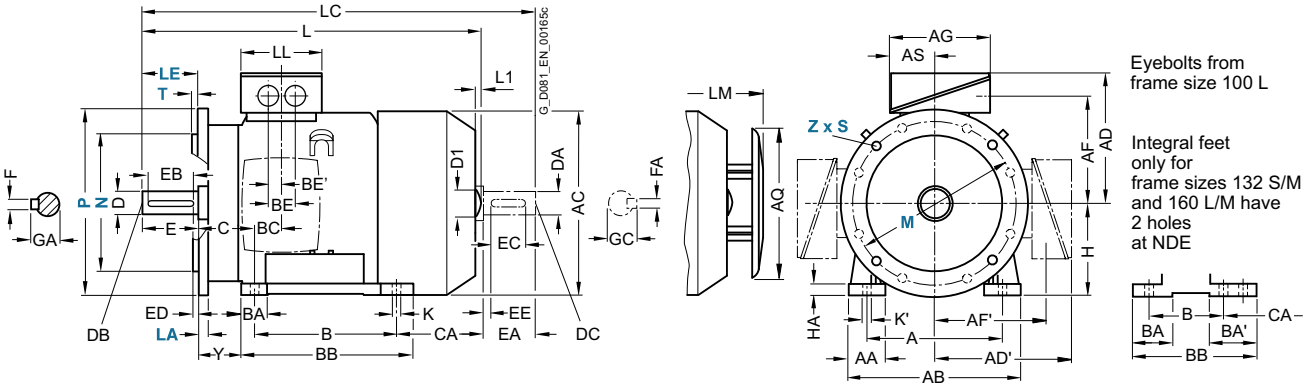

Type of construction IM B14

For flange dimensions, see Page 1/34 (**Z** = the number of retaining holes)

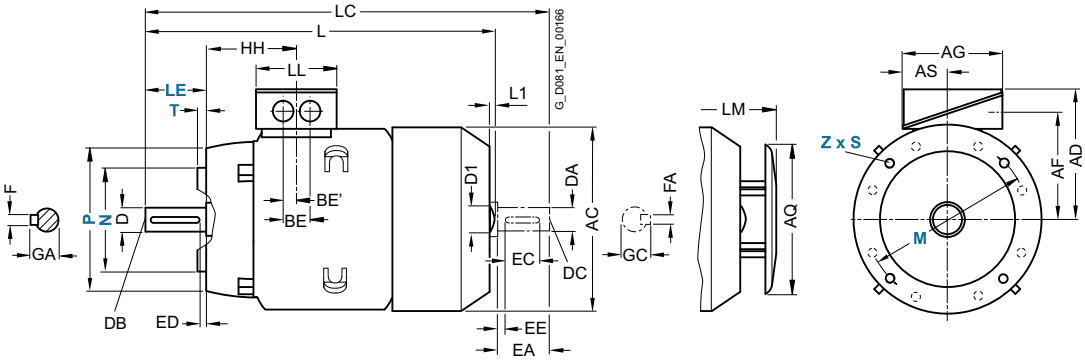

For motor			Dimension designation acc. to **IEC**									DE shaft extension							NDE shaft extension						
Frame size	Motor type 1MB10.1, 1MB10.2	No. of poles	HH	K	K'	L	L1	D1	LC	LL	LM	D	DB	E	EB	ED	F	GA	DA	DC	EA	EC	EE	FA	GC
80 M	1MB10.1	2, 4, 6	73	9.5	13.5	292	–	–	–	123	328	19	M6	40	32	4	6	21.5	19	M6	40	32	4	6	21.5
90 S/L	1MB10.1	2, 4, 6	78.5	10	14	347	–	–	–	123	383	24	M8	50	40	5	8	27	19	M6	40	32	4	6	21.5
90 L	1MB10.1	2, 4, 6	78.5	10	14	347	–	–	–	123	383	24	M8	50	40	5	8	27	19	M6	40	32	4	6	21.5
100 L	All	2, 4, 6, 8	96.5	12	16	395.5 [1]	7	32	454	112	428.5	28	M10	60	50	5	8	31	24	M8	50	40	5	8	27
112 M	All	2, 4, 6, 8	96	12	16	389 [1]	7	32	450	112	422	28	M10	60	50	5	8	31	24	M8	50	40	5	8	27
132 S	All	2, 4, 6, 8	115.5	12	16	465 [1]	8.5	39	535.5	130	516.5	38	M12	80	70	5	10	41	28	M10	60	50	5	8	31
132 M	All	2, 4, 6, 8	115.5	12	16	465	8.5	39	535.5	130	516.5	38	M12	80	70	5	10	41	28	M10	60	50	5	8	31
160 M	All	2, 4, 6, 8	155	15	19	604 [1]	10	45	730	145	654	42	M16	110	90	10	12	45	42	M16	110	90	10	12	45
160 L	All	2, 4, 6, 8	155	15	19	604 [1]	10	45	730	145	654	42	M16	110	90	10	12	45	42	M16	110	90	10	12	45

[1] The length is specified as far as the tip of the fan cover.

© Siemens AG 2015

Dimensional drawings

Type of construction IM B3

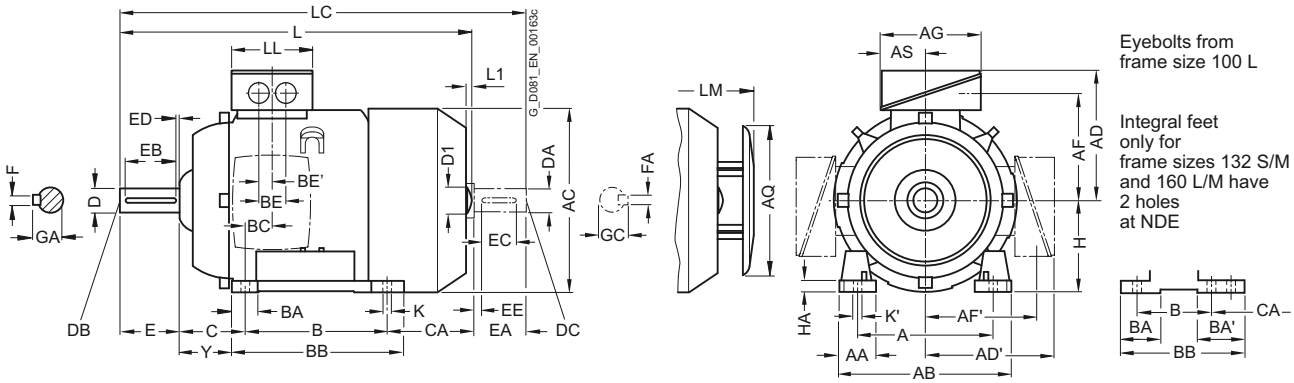

Types of construction IM B5 and IM V1

For flange dimensions, see Page 1/34 (**Z** = the number of retaining holes)

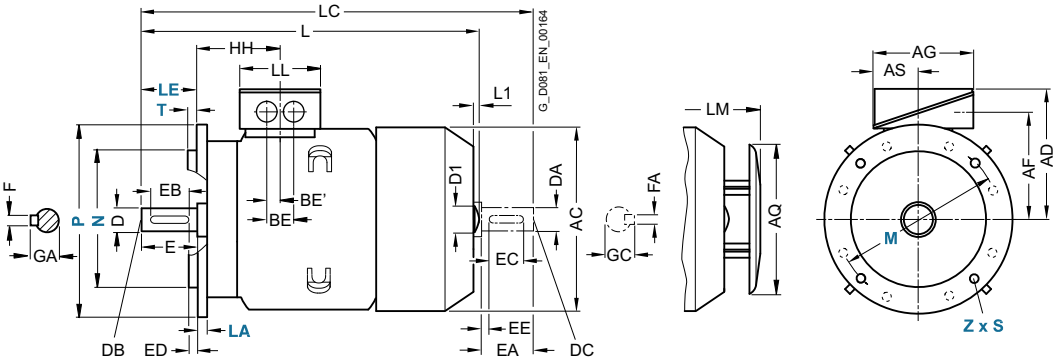

For motor			Dimension designation acc. to **IEC**																					
Frame size	Motor type 1MB10.3-	No. of poles	A	AA	AB	AC	AD	AD'	AF	AF'	AG	AQ	AS	B*	BA	BA'	BB	BC	BE	BE'	C	CA*	H	HA	Y
80 M	All	2, 4, 6	125	30.5	150	159	121	149	96.5	112	119.5	–	61.5	100	32	–	118	23	–	18	50	–	80	8	41
90 S	All	2, 4, 6	140	30.5	165	178	126	154	101.5	117	119.5	–	62.5	100	33	–	143	22.5	–	18	56	–	90	10	47
90 L	All	2, 4, 6	140	30.5	165	178	126	154	101.5	117	119.5	–	62.5	100	33	–	143	22.5	–	18	56	–	90	10	47
100 L	All	2, 4	160	42	196	198	193	193	147	147	163		80.5	140	40	–	176	37.5	48	24	63	176	100	12	45
112 M	All	2, 4	190	46	226	222	195	195	150	150	163		80.5	140	40	–	176	30	48	24	70	155	112	12	52
132 S	1CA0, 1CC0	2, 6	216	53	256	262	214.5	214.5	169	169	163		80.5	140	44	81 [1]	218 [2]	26.5	48	24	89	128.5	132	15	69
	1CA1, 1CB0	2, 4														–						178.5			
132 M	1CC2	6	216	53	256	262	214.5	214.5	169	169	163		80.5	178	44	81 [1]	218	26.5	48	24	89	128.5	132	15	69
	1CB2, 1CC3	4, 6														–						178.5			
160 M	All	2, 4, 6	254	60	300	314	261	261	213	213	190		92	210	51	95 [3]	300 [4]	37	60	30	108	148	160	18	85
160 L	All	2, 4, 6	254	60	300	314	261	261	213	213	190		92	254	51	95 [3]	300	37	60	30	108	208	160	18	85

* This dimension is assigned in EN 50347 to the frame size listed.

[1] With screwed-on feet, dimension BA' is 43 mm.

[2] With screwed-on feet, dimension BB is 180 mm.

[3] With screwed-on feet, dimension BA' is 51 mm.

[4] With screwed-on feet, dimension BB is 256 mm.

© Siemens AG 2015

Dimensional drawings (continued)

Type of construction IM B35

For flange dimensions, see Page 1/34 (**Z** = the number of retaining holes)

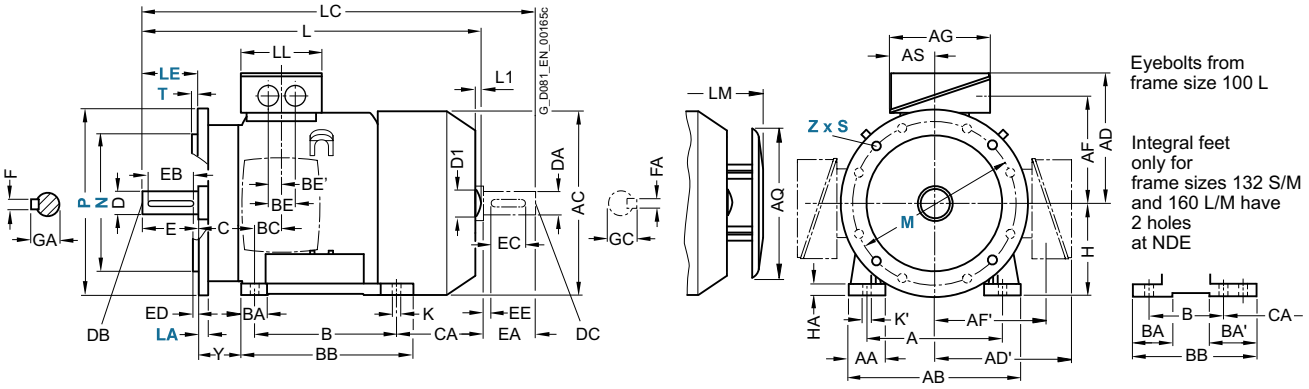

Type of construction IM B14

For flange dimensions, see Page 1/34 (**Z** = the number of retaining holes)

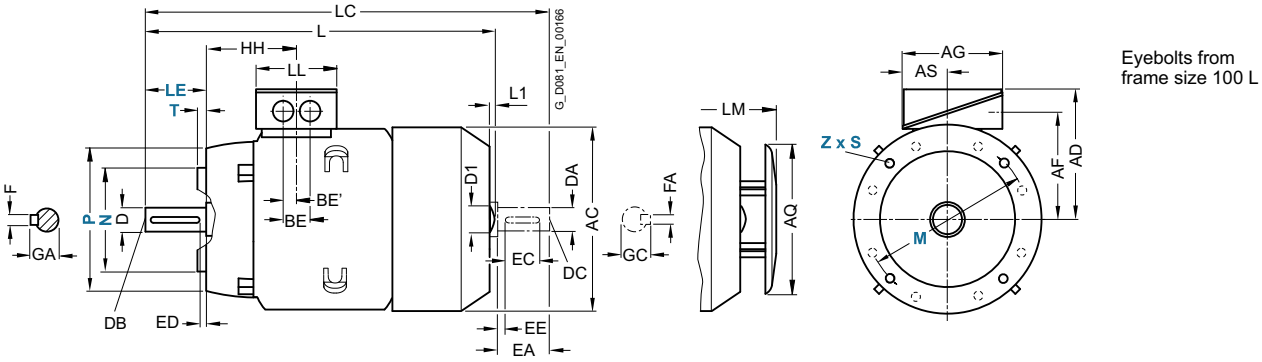

For motor			Dimension designation acc. to **IEC**									DE shaft extension							NDE shaft extension						
Frame size	Motor type 1MB10.3-	No. of poles	HH	K	K'	L [1]	L1	D1	LC	LL	LM	D	DB	E	EB	ED	F	GA	DA	DC	EA	EC	EE	FA	GC
80 M	All	2, 4, 6	73	9.5	13.5	292	–	–	–	123	–	19	M6	40	32	4	6	21.5	19	M6	40	32	4	6	21.5
90 S	All	2, 4, 6	78.5	10	14	347	–	–	–	123	–	24	M8	50	40	5	8	27	19	M6	40	32	4	6	21.5
90 L	All	2, 4, 6	78.5	10	14	387	–	–	–	123	–	24	M8	50	40	5	8	27	19	M6	40	32	4	6	21.5
100 L	All	2, 4	100.5	12	16	425	7	32	489	134	463.5	28	M10	60	50	5	8	31	24	M8	50	40	5	8	27
112 M	All	2, 4	100.5	12	16	408.5	7	32	475	134	447	28	M10	60	50	5	8	31	24	M8	50	40	5	8	27
132 S	1CA0, 1CC0	2, 6	115.5	12	16	458	8.5	39	535.5	134	516.5	38	M12	80	70	5	10	41	28	M10	60	50	5	8	31
	1CA1, 1CB0	2, 4				508			585.5		550.5														
132 M	1CC2	6	115.5	12	16	458	8.5	39	535.5	134	516.5	38	M12	80	70	5	10	41	28	M10	60	50	5	8	31
	1CB2, 1CC3	4, 6				508			585.5		550.5														
160 M	All	2, 4, 6	145	15	19	596	10	45	730	165	654	42	M16	110	90	10	12	45	42	M16	110	90	10	12	45
160 L	All	2, 4, 6	145	15	19	656	10	45	790	165	714	42	M16	110	90	10	12	45	42	M16	110	90	10	12	45

[1] The length is specified as far as the tip of the fan cover.

© Siemens AG 2015

Dimensional drawings (continued)

Type of construction IM B3

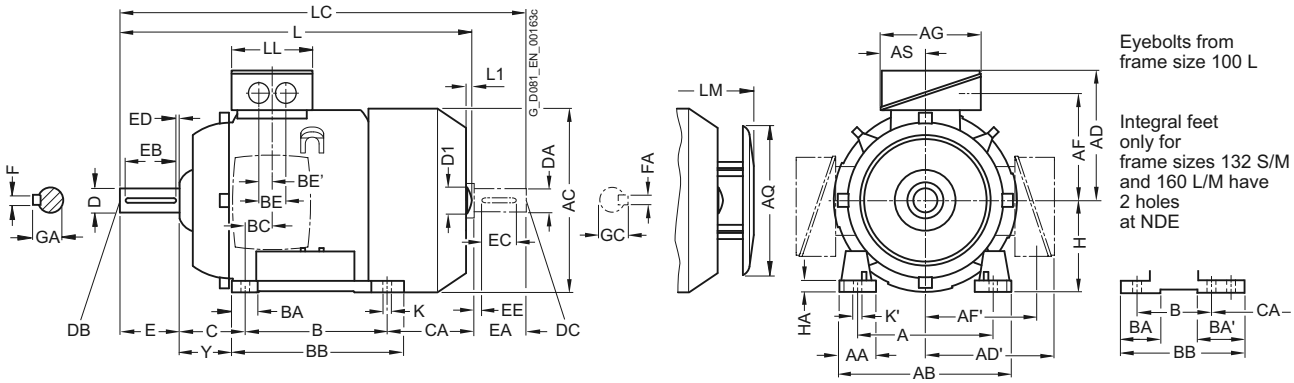

Types of construction IM B5 and IM V1

For flange dimensions, see Page 1/34 (**Z** = the number of retaining holes)

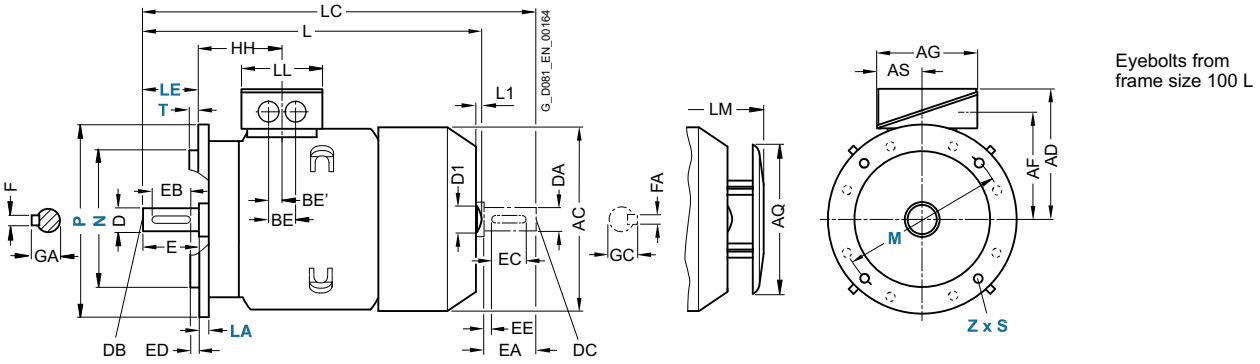

For motor			Dimension designation acc. to **IEC**																				
Frame size	Motor type 1MB15.1, 1MB16.1	No. of poles	A	AA	AB	AC	AD	AD'	AF	AF'	AG	AS	B*	BA	BA'	BB	BC	BE	BE'	C	CA*	H	HA	Y
100 L	All	2, 4, 6, 8	160	42	196	198	193	193	147	147	163	80.5	140	40	–	176	37.5	48	24	63	141	100	12	45
112 M	All	2, 4, 6, 8	190	46	226	222	195	195	150	150	163	80.5	140	40	–	176	30	48	24	70	129.7	112	12	52
132 S	All	2, 4, 6, 8	216	53	256	262	214.5	214.5	169	169	163	80.5	140	44	81 [1]	218 [3]	26.5	48	24	89	–	132	15	69
132 M	All	2, 4, 6, 8	216	53	256	262	214.5	214.5	169	169	163	80.5	178	44	81 [1]	218	26.5	48	24	89	–	132	15	69
160 M	All	2, 4, 6, 8	254	60	300	314	265	265	213	213	190	92	210	51	95 [2]	300 [4]	37	60	30	108	–	160	18	85
160 L	All	2, 4, 6, 8	254	60	300	314	265	265	213	213	190	92	254	51	95 [2]	300	37	60	30	108	–	160	18	85

* This dimension is assigned in EN 50347 to the frame size listed.

[1] With screwed-on feet, dimension BA' is 43 mm.

[2] With screwed-on feet, dimension BA' is 51 mm.

[3] With screwed-on feet, dimension BB is 180 mm.

[4] With screwed-on feet, dimension BB is 256 mm

© Siemens AG 2015

Dimensional drawings (continued)

Type of construction IM B35

For flange dimensions, see Page 1/34 (**Z** = the number of retaining holes)

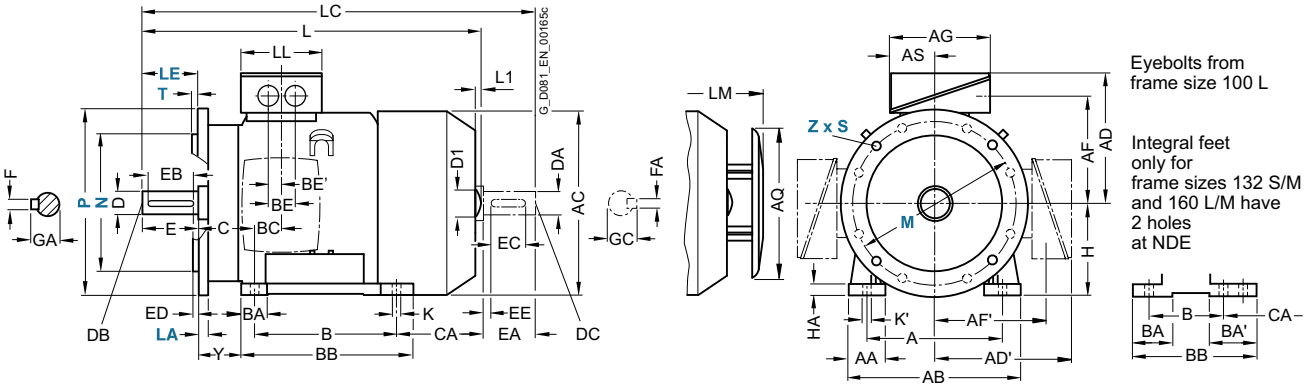

Type of construction IM B14

For flange dimensions, see Page 1/34 (**Z** = the number of retaining holes)

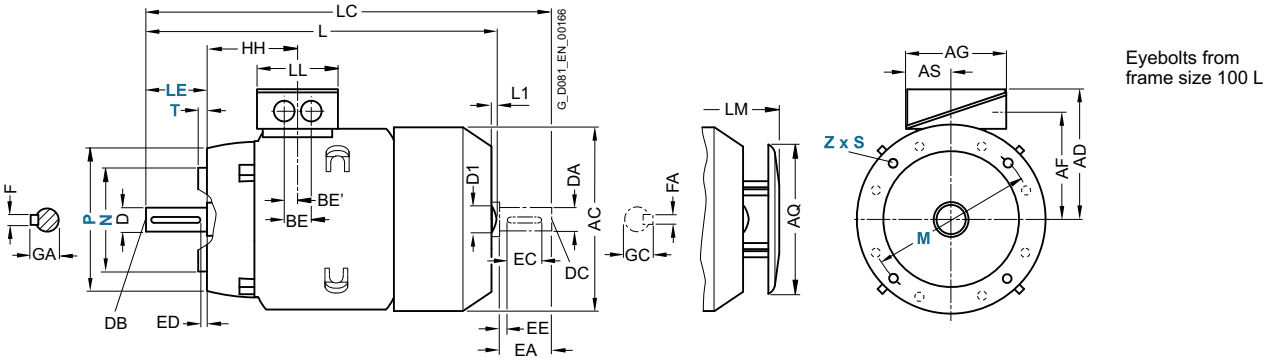

For motor			Dimension designation acc. to **IEC**								DE shaft extension							NDE shaft extension						
Frame size	Motor type 1MB15.1, 1MB16.1	No. of poles	HH	K	K'	L [1]	L1 [2]	D1	LC	LL	D	DB	E	EB	ED	F	GA	DA	DC	EA	EC	EE	FA	GC
100 L	All	2, 4, 6, 8	100.5	12	16	389	7	32	454	134	28	M10	60	50	5	8	31	24	M8	50	40	5	8	27
112 M	All	2, 4, 6, 8	100.5	12	16	382	7	32	450	134	28	M10	60	50	5	8	31	24	M8	50	40	5	8	27
132 S	All	2, 4, 6, 8	115.5	12	16	457	8.5	39	536	134	38	M12	80	70	5	10	41	28	M10	60	50	5	8	31
132 M	All	2, 4, 6, 8	115.5	12	16	457	8.5	39	536	134	38	M12	80	70	5	10	41	28	M10	60	50	5	8	31
160 M	All	2, 4, 6, 8	145	15	19	594	10	45	730	165	42	M16	110	90	10	12	45	42	M16	110	90	10	12	45
160 L	All	2, 4, 6, 8	145	15	19	594	10	45	730	165	42	M16	110	90	10	12	45	42	M16	110	90	10	12	45

[1] For 1MB15 motors, plus dimension L1.

[2] Only for 1MB15 motors.

© Siemens AG 2015

Dimensional drawings (continued)

Type of construction IM B3

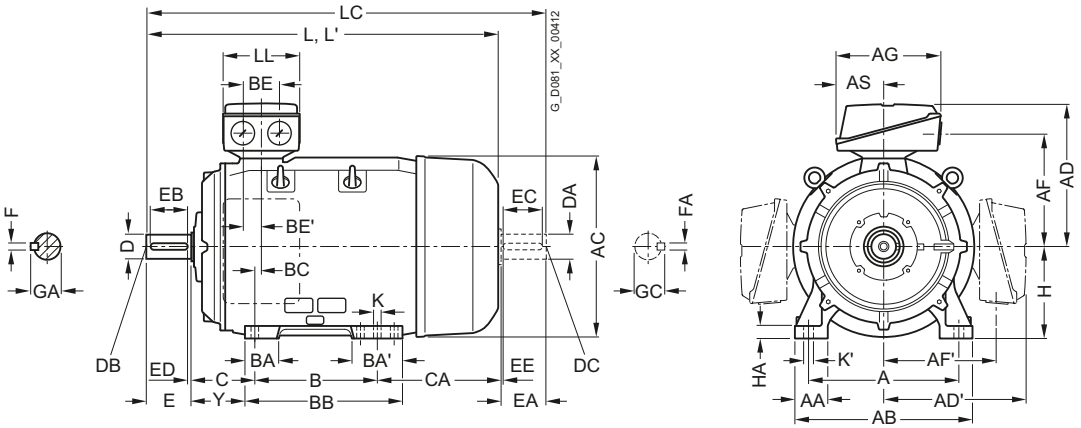

Types of construction IM B5 and IM V1

For flange dimensions, see Page 1/34 (**Z** = the number of retaining holes)

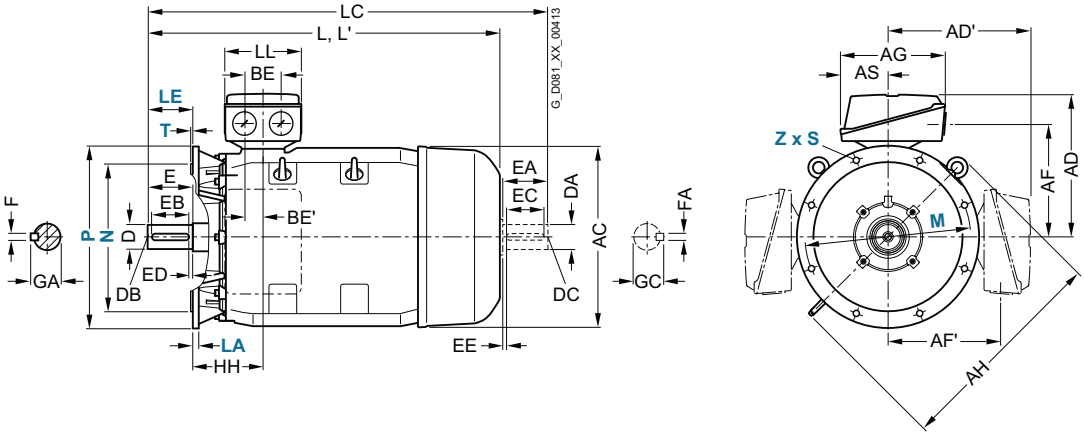

For motor			Dimension designation acc. to **IEC**																		
Frame size	Motor type	No. of poles	A	AA	AB	AC	AD	AD'	AF	AF'	AG	AH	AS	B*	BA	BA'	BB	BC	BE	BE'	C	CA*
	1MB15.1-, 1MB16.1-																					
180 M/ 180 L	1EA2, 1EB2, 1ED4	2, 4, 8	279	65	339	356	286	286	234	234	190	468	92	241	85	120	328	34	60	30	121	202
	1EB4, 1EC4	4, 6																				
200 L	All	2, 4, 6, 8	318	60	378	396	315	315	259	259	266	533	112	305	104	104	355	31	85	42.5	133	177
225 S/ 225 M	2BB0, 2BD0,	4, 8	356	80	436	449	338	338	282	282	266	556	112	311	92	117	361	15	85	42.5	149	253
	2BB2, 2BC2, 2BD2	4, 6, 8																				
	2BA2	2																				
250 M	2CA2	2	406	100	490	497	410	410	322	322	319	620	145	349	102	102	409	24	110	55	168	230
	2CB2, 2CC2, 2CD2	4, 6, 8																				

* This dimension is assigned in EN 50347 to the frame size listed.

© Siemens AG 2015

Dimensional drawings (continued)

Type of construction IM B35

For flange dimensions, see Page 1/34 (**Z** = the number of retaining holes)

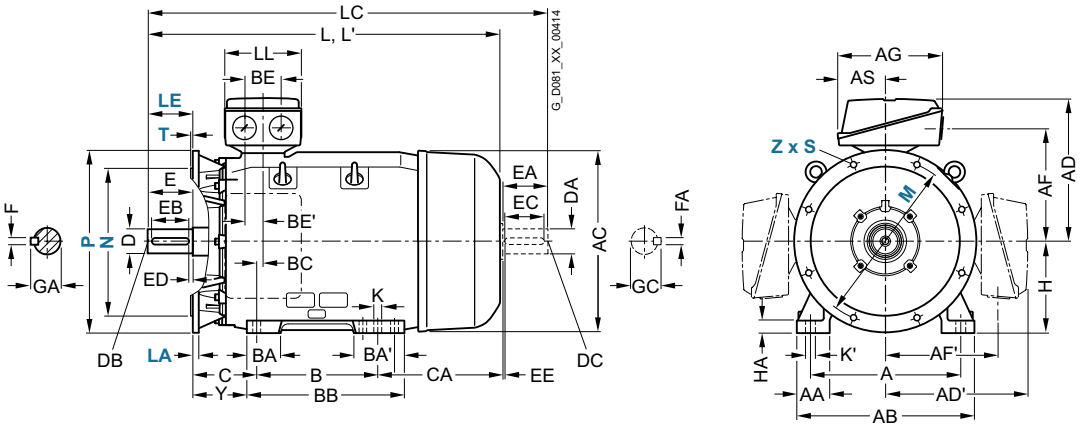

For motor			Dimension designation acc. to **IEC**										DE shaft extension							NDE shaft extension						
Frame size	Motor type	No. of poles	H	HA	Y	HH	K	K'	L	L' [1]	LC [2]	LL	D	DB	E	EB	ED	F	GA	DA	DC	EA	EC	EE	FA	GC
	1MB15.1-, 1MB16.1-																									
180 M/ 180 L	1EA2, 1EB2, 1ED4	2, 4, 8	180	20	95	155	15	19	668	668	784	165	48	M16	110	100	5	14	52	48	M16	110	100	5	14	51.5
	1EB4, 1EC4	4, 6							698	698	814															
200 L	All	2, 4, 6, 8	200	25	108	164	19	25	721	755	835	197	55	M20	110	100	5	16	59	55	M20	110	100	5	16	59
225 S/ 225 M	2BB0, 2BD0,	4, 8	225	34	124	164	19	25	788	–	903	197	60	M20	140	125	10	18	64	55	M20	110	100	5	16	59
	2BB2, 2BC2, 2BD2	4, 6, 8							848		963															
	2BA2	2							818	852	933		55		110	100	5	16	59	48	M16				14	51.5
250 M	2CA2	2	250	40	138	192	24	30	887	924	1002	233	60	M20	140	125	10	18	64	55	M20	110	100	5	16	59
	2CB2, 2CC2, 2CD2	4, 6, 8								–	1032		65						69	60		140	125	10	18	64

[1] For version with low-noise fan for 2-pole motors.

[2] In the low-noise version, a second shaft extension and/or mounted encoder is not possible.

© Siemens AG 2015

Dimensional drawings (continued)

Type of construction IM B3

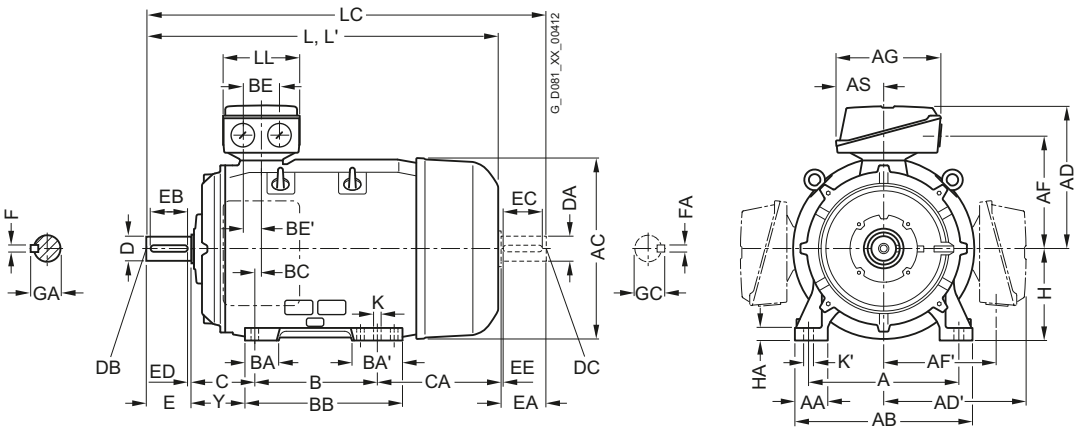

Types of construction IM B5 and IM V1

For flange dimensions, see Page 1/34 (**Z** = the number of retaining holes)

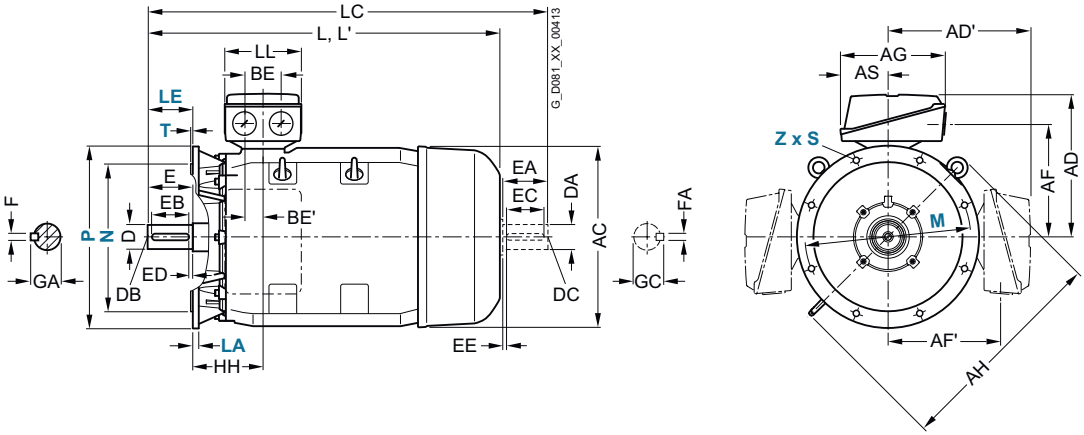

For motor			Dimension designation acc. to **IEC**																		
Frame size	Motor type 1MB15.1-, 1MB16.1-	No. of poles	A	AA	AB	AC	AD	AD'	AF	AF'	AG	AH	AS	B*	BA	BA'	BB	BC	BE	BE'	C	CA*
280 S	2DA0	2	457	100	540	551	433	433	345	345	319	672	145	368	101	152	479	20	110	55	190	267
	2DB0, 2DC0, 2DD0	4, 6, 8																				
280 M	2DA2	2	457	100	540	551	433	433	345	345	319	672	145	419	101	152	479	20	110	55	190	216
	2DB2, 2DC2, 2DD2	4, 6, 8																				
315 S	3AA0	2	508	120	610	616	515	515	404	404	374	780	164	406	113	170	527	22	110	55	216	295
	3AB0, 3AC0, 3AD0	4, 6, 8																				
315 M	3AA2	2	508	120	610	616	515	515	404	404	374	780	164	457	113	170	578	22	110	55	216	409
	3AB2	4																				
	3AC2, 3AD2	6, 8															327					244
315 L	3AA4	2	508	120	610	616	515	515	404	404	374	780	164	508	113	170	578	22	110	55	216	358
	3AB4, 3AC4, 3AD4, 3AC5, 3AD5, 3AD6	4, 6, 8																				
	3AA5	2													176	227	648					513
	3AB5 [1], 3AC6 [1]	4, 6																				

* This dimension is assigned in EN 50347 to the frame size listed.

[1] With order codes for terminal box positions (**K05**, **K06**, **H01**) only screwed-on feet with 3 drilled holes with dimension "B" (406, 457 and 506 mm). The dimension "BB" will then be 666 mm.

© Siemens AG 2015

Dimensional drawings (continued)

Type of construction IM B35

For flange dimensions, see Page 1/34 (**Z** = the number of retaining holes)

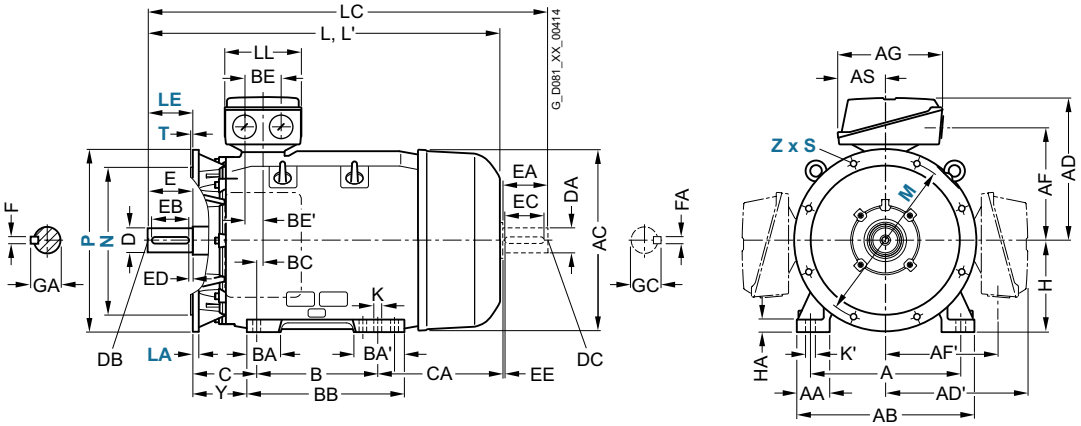

For motor			Dimension designation acc. to **IEC**										DE shaft extension							NDE shaft extension						
Frame size	Motor type	No. of poles	H	HA	Y	HH	K	K'	L	L' [1]	LC [2]	LL	D	DB	E	EB	ED	F	GA	DA	DC	EA	EC	EE	FA	GC
	1MB15.1-, 1MB16.1-																									
280 S	2DA0	2	280	40	160	210	24	30	960	998	1105	233	65	M20	140	125	10	18	69	60	M20	140	125	10	18	64
	2DB0, 2DC0, 2DD0	4, 6, 8								–			75					20	79.5	65						69
280 M	2DA2	2	280	40	160	210	24	30	960	998	1105	233	65	M20	140	125	10	18	69	60	M20	140	125	10	18	64
	2DB2, 2DC2, 2DD2	4, 6, 8								–			75					20	79.5	65						69
315 S	3AA0	2	315	50	181	238	28	35	1052	1122	1197	299	65	M20	140	125	10	18	69	60	M20	140	125	10	18	64
	3AB0, 3AC0, 3AD0	4, 6, 8							1082	–	1227		80		170	140	25	22	85	70					20	74.5
315 M	3AA2	2	315	50	181	238	28	35	1217	1287	1362	299	65	M20	140	125	10	18	69	60	M20	140	125	10	18	64
	3AB2	4							1247	–	1392		80		170	140	25	22	85	70					20	74.5
	3AC2, 3AD2	6, 8							1082		1227															
315 L	3AA4	2	315	50	181	238	28	35	1217	1287	1362	299	65	M20	140	125	10	18	69	60	M20	140	125	10	18	64
	3AB4, 3AC4, 3AD4, 3AC5, 3AD5, 3AD6	4, 6, 8							1247	–	1392		80		170	140	25	22	85	70					20	74.5
	3AA5	2			146				1372	1442	1517		65		140	125	10	18	69	60					18	64
	3AB5, 3AC6	4, 6							1402	–	1547		80		170	140	25	22	85	70					20	74.5

[1] For version with low-noise fan for 2-pole motors.

[2] In the low-noise version, a second shaft extension and/or mounted encoder is not possible.

© Siemens AG 2015

Dimensional drawings (continued)

Type of construction IM B3

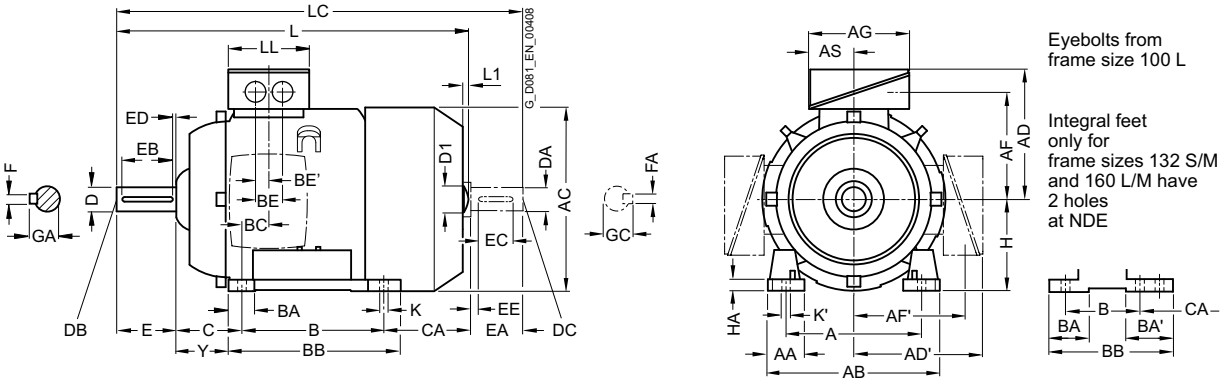

Types of construction IM B5 and IM V1

For flange dimensions, see Page 1/34 (**Z** = the number of retaining holes)

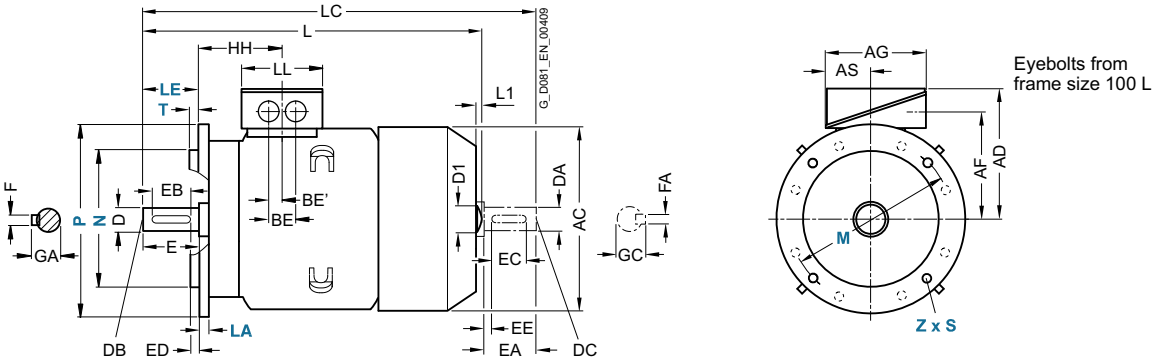

For motor			Dimension designation acc. to **IEC**																					
Frame size	Motor type	No. of poles	A	AA	AB	AC	AD	AD'	AF	AF'	AG	AS	B*	BA	BA'	BB	BC	BE	BE'	C	CA*	H	HA	Y
	1MB15.3-, 1MB16.3-																							
100 L	All	2, 4, 6	160	42	196	198	193	193	147	147	163	80.5	140	40	–	176	37.5	48	24	63	176	100	12	45
112 M	All	2, 4, 6	190	46	226	222	195	195	150	150	163	80.5	140	40	–	176	30	48	24	70	155	112	12	52
132 S	1CA0, 1CC0	2, 6	216	53	256	262	214.5	214.5	169	169	163	80.5	140	44	81 [1]	218 [2]	26.5	48	24	89	128.5	132	15	69
	1CA1, 1CB0	2, 4													–						178.5			
132 M	1CC2	6	216	53	256	262	214.5	214.5	169	169	163	80.5	178	44	81 [1]	218	26.5	48	24	89	128.5	132	15	69
	1CB2, 1CC3	4, 6													–						178.5			
160 M	All	2, 4, 6	254	60	300	314	261	261	213	213	190	92	210	51	95 [3]	300 [4]	37	60	30	108	148	160	18	85
160 L	All	2, 4, 6	254	60	300	314	261	261	213	213	190	92	254	51	95 [3]	300	37	60	30	108	208	160	18	85

* This dimension is assigned in EN 50347 to the frame size listed.

[1] With screwed-on feet, dimension BA' is 43 mm.

[2] With screwed-on feet, dimension BB is 180 mm.

[3] With screwed-on feet, dimension BA' is 51 mm.

[4] With screwed-on feet, dimension BB is 256 mm.

© Siemens AG 2015

Dimensional drawings (continued)

Type of construction IM B35

For flange dimensions, see Page 1/34 (**Z** = the number of retaining holes)

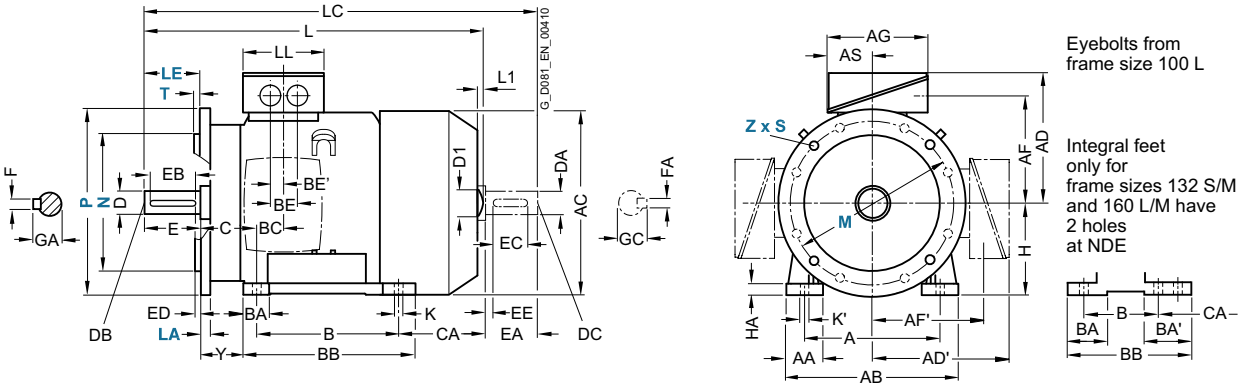

Type of construction IM B14

For flange dimensions, see Page 1/34 (**Z** = the number of retaining holes)

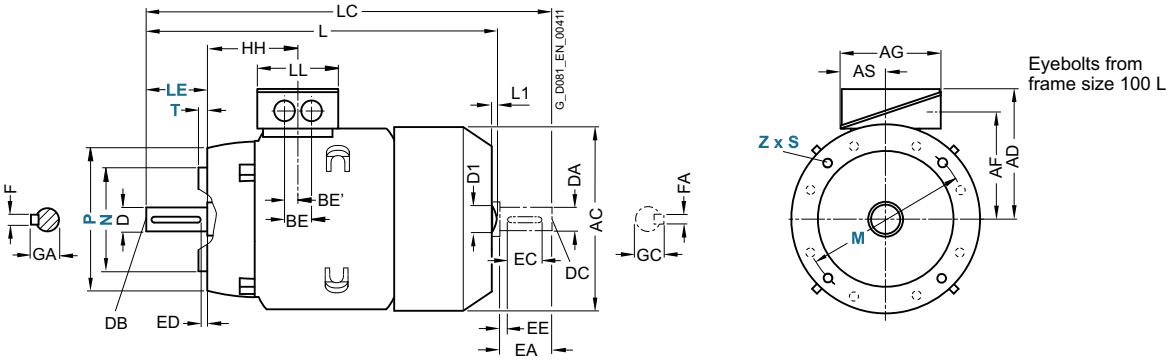

For motor			Dimension designation acc. to **IEC**								DE shaft extension							NDE shaft extension						
Frame size	Motor type	No. of poles	HH	K	K'	L [1]	L1 [2]	D1	LC	LL	D	DB	E	EB	ED	F	GA	DA	DC	EA	EC	EE	FA	GC
	1MB15.3-, 1MB16.3-																							
100 L	All	2, 4, 6	100.5	12	16	425	7	32	489	134	28	M10	60	50	5	8	31	24	M8	50	40	5	8	27
112 M	All	2, 4, 6	100.5	12	16	409	7	32	475	134	28	M10	60	50	5	8	31	24	M8	50	40	5	8	27
132 S	1CA0, 1CC0	2, 6	115.5	12	16	458	8.5	39	536	134	38	M12	80	70	5	10	41	28	M10	60	50	5	8	31
	1CA1, 1CB0	2, 4				508			586															
132 M	1CC2	6	115.5	12	16	458	8.5	39	536	134	38	M12	80	70	5	10	41	28	M10	60	50	5	8	31
	1CB2, 1CC3	4, 6				508			586															
160 M	All	2, 4, 6	145	15	19	596	10	45	730	165	42	M16	110	90	10	12	45	42	M16	110	90	10	12	45
160 L	All	2, 4, 6	145	15	19	656	10	45	790	165	42	M16	110	90	10	12	45	42	M16	110	90	10	12	45

[1] For 1MB15 motors, plus dimension L1.

[2] Only for 1MB15 motors.

© Siemens AG 2015

Dimensional drawings (continued)

Type of construction IM B3

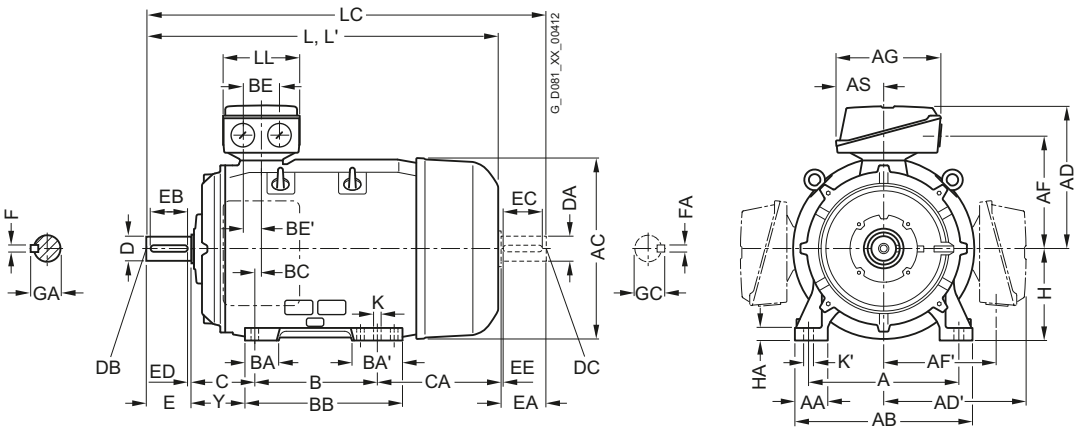

Types of construction IM B5 and IM V1

For flange dimensions, see Page 1/34 (**Z** = the number of retaining holes)

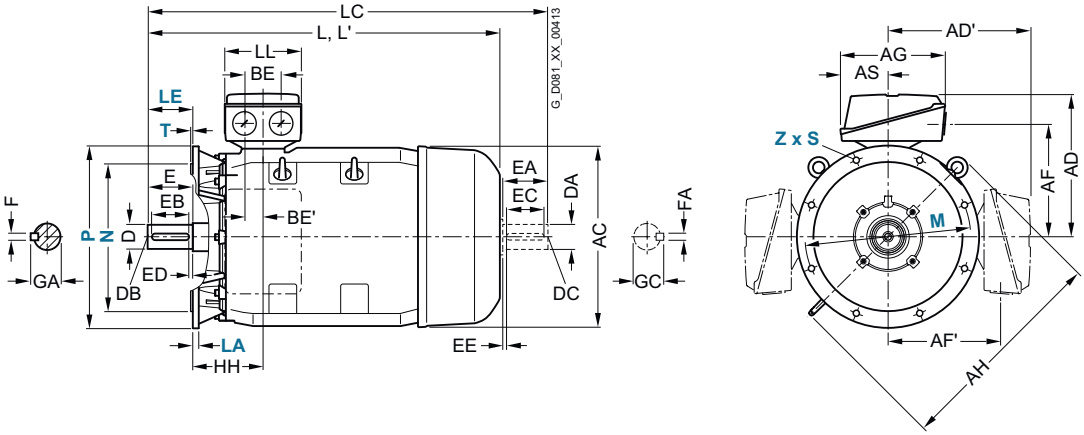

For motor			Dimension designation acc. to **IEC**																		
Frame size	Motor type	No. of poles	A	AA	AB	AC	AD	AD'	AF	AF'	AG	AH	AS	B*	BA	BA'	BB	BC	BE	BE'	C	CA*
	1MB15.3-, 1MB16.3-																					
180 M/ 180 L	1EA2, 1EB4	2, 4	279	65	339	356	286	286	234	234	190	468	92	241	85	120	328	34	60	30	121	202
	1EB2, 1EC4	4, 6																				
200 L	2AA4, 2AC4	2, 6	318	60	378	396	315	315	259	259	266	533	112	305	104	104	355	31	85	42.5	133	177
	2AA5. 2AB5.2AC5	2, 4, 6																				
225 S	2BB0	4	356	80	436	449	338	338	282	282	266	556	112	286	92	117	361	15	85	42.5	149	218
225 M	2BA2	2	356	80	436	449	338	338	282	282	266	556	112	311	92	117	361	15	85	42.5	149	253
	2BB2, 2BC2	4, 6																				
250 M	2CA2	2	406	100	490	497	410	410	322	322	319	620	145	349	102	102	409	24	110	55	168	230
	2CB2, 2CC2	4, 6																				
280 S	2DA0	2	457	100	540	551	433	433	345	345	319	672	145	368	101	152	479	20	110	55	190	267
	2DB0, 2DC0	4, 6																				
280 M	2DA2	2	457	100	540	551	433	433	345	345	319	672	145	419	101	152	479	20	110	55	190	326
	2DB2	4																				
	2DC2	6																				216
315 S	3AA0	2	508	120	610	616	515	515	404	404	374	780	164	406	113	170	527	22	110	55	216	295
	3AB0, 3AC0	4, 6																				
315 M	3AA2	2	508	120	610	616	515	515	404	404	374	780	164	457	113	170	578	22	110	55	216	409
	3AB2, 3AC2	4, 6																				
315 L	3AA4	2	508	120	610	616	515	515	404	404	374	780	164	508	113	170	578	22	110	55	216	358
	3AB4, 3AC4	4, 6																				
	3AA5	2													176	227	648					513
	3AB5, 3AC5, 3AC6	4, 6																				

* This dimension is assigned in EN 50347 to the frame size listed.

© Siemens AG 2015

Dimensional drawings (continued)

Type of construction IM B35

For flange dimensions, see Page 1/34 (**Z** = the number of retaining holes)

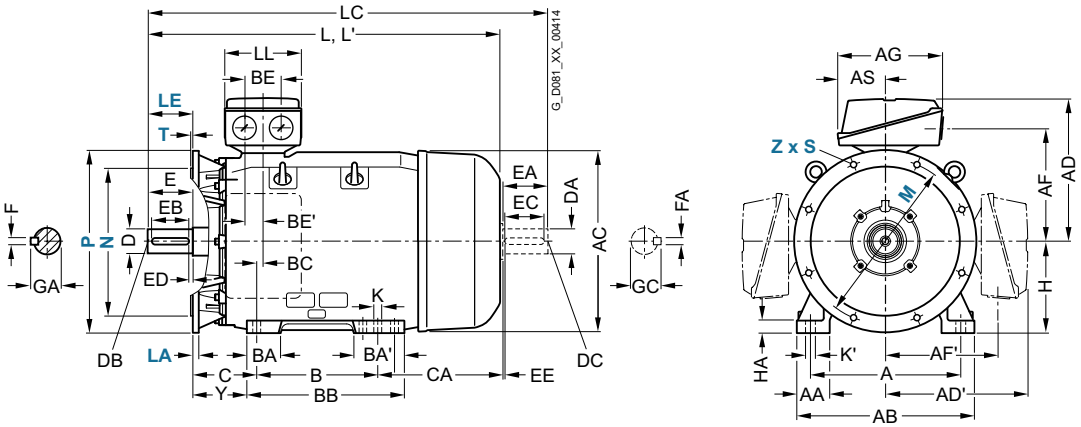

For motor		Dimension designation acc. to **IEC**												DE shaft extension							NDE shaft extension						
Frame size	Motor type	No. of poles	H	HA	Y	HH	K	K'	L	L' [1]	LC [2]	LL	D	DB	E	EB	ED	F	GA	DA	DC	EA	EC	EE	FA	GC
	1MB15.3-, 1MB16.3-																										
180 M/ 180 L	1EA2, 1EB4	2, 4	180	20	95	155	15	19	698	698	814	165	48	M16	110	100	5	14	52	48	M16	110	100	5	14	51.5
	1EB2, 1EC4	4, 6							668	668	784																
200 L	2AA4, 2AC4	2, 6	200	25	108	164	19	25	721	755	835	197	55	M20	110	100	5	16	59	55	M20	110	100	5	16	59
	2AA5, 2AB5, 2AC5	2, 4, 6							746	780	860																
225 S	2BB0	4	225	34	124	164	19	25	788	–	903	197	60	M20	140	125	10	18	64	55	M20	110	100	5	16	59
225 M	2BA2	2	225	34	124	164	19	25	818	852	933	197	55	M20	110	100	5	16	59	48	M16	110	100	5	14	51.5
	2BB2, 2BC2	4, 6							848	–	963		60		140	125	10	18	64	55	M20				16	59
250 M	2CA2	2	250	40	138	192	24	30	887	924	1002	233	60	M20	140	125	10	18	64	55	M20	110	100	5	16	59
	2CB2, 2CC2	4, 6								–	1032		65						69	60		140	125	10	18	64
280 S	2DA0	2	280	40	160	210	24	30	960	998	1105	233	65	M20	140	125	10	18	69	60	M20	140	125	10	18	64
	2DB0, 2DC0	4, 6								–			75					20	79.5	65						69
280 M	2DA2	2	280	40	160	210	24	30	1070	1108	1105	233	65	M20	140	125	10	18	69	60	M20	140	125	10	18	64
	2DB2	4								–	1215		75					20	79.5	65						69
	2DC2	6							960																	
315 S	3AA0	2	315	50	181	238	28	35	1052	1122	1197	299	65	M20	140	125	10	18	69	60	M20	140	125	10	18	64
	3AB0, 3AC0	4, 6							1082	–	1227		80		170	140	25	22	85	70					20	74.5
315 M	3AA2	2	315	50	181	238	28	35	1217	1287	1362	299	65	M20	140	125	10	18	69	60	M20	140	125	10	18	64
	3AB2, 3AC2	4, 6							1247	–	1392		80		170	140	25	22	85	70					20	74.5
315 L	3AA4	2	315	50	181	238	28	35	1217	1287	1362	299	65	M20	140	125	10	18	69	60	M20	140	125	10	18	64
	3AB4, 3AC4	4, 6							1247	–	1392		80		170	140	25	22	85	70					20	74.5
	3AA5	2			146				1372	1442	1517		65		140	125	10	18	69	60					18	64
	3AB5, 3AC5, 3AC6	4, 6							1402	–	1547		80		170	140	25	22	85	70					20	74.5

[1] For version with low-noise fan for 2-pole motors.

[2] In the low-noise version, a second shaft extension and/or mounted encoder is not possible.

© Siemens AG 2015

Notes

© Siemens AG 2015



5/2 Smoke-extraction motors
5/2 Orientation
5/2 • Overview
5/3 • Benefits
5/3 • Application
5/3 • Technical specifications
5/7 Article number code
5/7 • Selection and ordering data
5/8 Self-ventilated or forced-air cooled motors with IE2 High Efficiency
5/8 • Aluminum series 1PC1300
5/10 • Cast-iron series 1PC1301
5/13 Self-ventilated or forced-air cooled motors with IE3 Premium Efficiency
5/13 • Aluminum series 1PC1303
5/14 • Cast-iron series 1PC1304
5/16 Supplements to article numbers and special versions
5/16 • Voltages
5/16 - Aluminum series 1PC1300, 1PC1303
5/16 - Cast-iron series 1PC1301, 1PC1304
5/17 • Types of construction
5/17 - Aluminum series 1PC1300, 1PC1303
5/19 - Cast-iron series 1PC1301, 1PC1304
5/20 • Motor protection
5/20 - Aluminum series 1PC1300, 1PC1303
5/20 - Cast-iron series 1PC1301, 1PC1304
5/21 • Terminal box position
5/21 - Aluminum series 1PC1300, 1PC1303
5/21 - Cast-iron series 1PC1301, 1PC1304
5/22 • Options
5/22 - Aluminum series 1PC1300, 1PC1303
5/24 - Cast-iron series 1PC1301, 1PC1304
5/26 • Accessories
5/28 Dimensions
5/28 • Overall dimensions
5/29 • Notes on the dimensions
5/29 • Dimension sheet generator
5/30 • Aluminum series 1PC1300, 1PC1303 self-ventilated, frame sizes 80 M to 160 L
5/32 • Aluminum series 1PC1300, 1PC1303 forced-air cooled, frame sizes 80 M to 160 L
5/34 • Cast-iron series 1PC1301, 1PC1304 self-ventilated, frame sizes 180 M to 250 M
5/36 • Cast-iron series 1PC1301, 1PC1304 self-ventilated, frame sizes 280 S to 315 L
5/38 • Cast-iron series 1PC1301, 1PC1304 forced-air cooled, frame sizes 180 M to 250 M
5/40 • Cast-iron series 1PC1301, 1PC1304 forced-air cooled, frame sizes 280 S to 315 L

5/42 Marine motors
5/42 Orientation
5/42 • Overview
5/43 • Benefits
5/44 • Application
5/44 • Technical specifications
5/47 • Additional notes
5/48 Special versions
5/48 • Options
5/48 - Aluminum series 1LE10
5/49 - Cast-iron series 1LE15 Basic Line, 1LE16 Performance Line
5/50 - Aluminum series 1MB10, cast-iron series 1MB15/1MB16

5/51 Steel plant motors 1PC14
5/51 Orientation
5/51 • Overview
5/51 • Benefits
5/52 • Application
5/53 • Technical specifications
5/57 Motors with IE3 Premium Efficiency for line operation
5/57 • Cast-iron series 1PC1433, self-ventilated
5/58 Motors for converter operation
5/58 • Cast-iron series 1PC1443, self-ventilated
5/60 • Cast-iron series 1PC1463, naturally cooled
5/61 Supplements to article numbers and special versions
5/61 • Voltages
5/62 • Types of construction
5/63 • Motor protection
5/64 • Terminal box position
5/65 • Options
5/67 • Accessories
5/68 Dimensions
5/68 • Overall dimensions
5/69 • Notes on the dimensions
5/69 • Dimension sheet generator
5/70 • Cast-iron series 1PC1433, 1PC1443 self-ventilated, frame sizes 112 M to 160 L
5/72 • Cast-iron series 1PC1433, 1PC1443 self-ventilated, frame sizes 180 M to 280 M
5/74 • Cast-iron series 1PC1463, naturally cooled, frame sizes 132 S to 280 M

© Siemens AG 2015

Overview

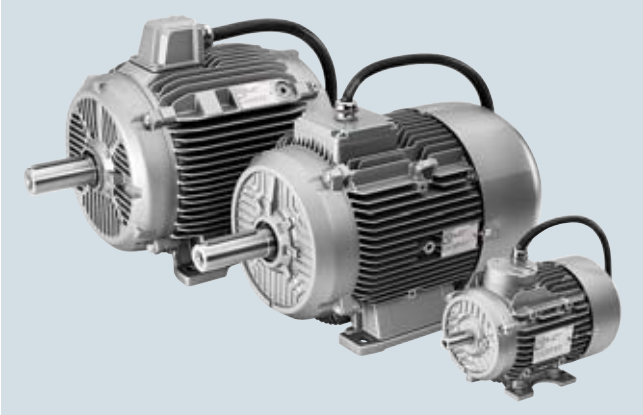

The low-voltage motors with squirrel-cage rotors in efficiency class IE2 for implementation in automatic smoke and heat extraction units to EN 12101-3 are mainly designed for driving smoke-extraction fans. For this reason, they are known as smoke-extraction motors. They are mainly used in buildings or structures in which smoke control is necessary due to their shape and arrangement.

Temperature/time classification according to EN 12101-3

- F200 corresponds to 200 °C for 120 min
- F300 corresponds to 300 °C for 60 min

Testing and test certificates

The smoke-extraction motors have been tested in accordance with EN 12101-3 by the Materialprüfanstalt Braunschweig (Material Test Institute, Brunswick, Germany) in the "Institute for Building materials, concrete construction and fire protection".

Test conditions for F200/F300:
- Temperature **300 °C**
- Time **120 min**

The test certificates are available.



iBMB MPA TU BRAUNSCHWEIG

Nachweis über die Prüfung von Niederspannungs-Motoren nach DIN EN 12101-3 : Juni 2002, Anhang D

In Brandprüfung nach DIN EN 12101-3 Juni 2002 wurden folgende Motoren geprüft:

Hersteller:	Siemens AG Industry Sector Drive Technologies Division Large Drives Vogelweiherstr. 1-15 90441 Nürnberg / Germany
Motorbaureihe:	Brandgasmotoren in Graugussausführung
Typenbezeichnung	1PC1301....
Motorbaugrößen:	Von BG 180 bis BG 315
Prüfzeitraum:	01.07.2013 bis 12.07.2013
Prüfberichtsnummer:	(3731/858/13-D5.1) – Schy und (3731/858/13-D5.2)
Prüftemperatur und Zeit	Temperaturbeanspruchung 300 °C über 120 Minuten und 2 Minuten Ausschaltzeit mit darauffolgender Einschaltung
Mechanische Belastung:	Gleichzeitig axiale und radiale Wellenlast nach Katalogangaben und Drehzahl 3000 1/min während der Vorlaufzeit und der Temperaturbeanspruchung
Elektrische Belastung:	80% den Nennaufnahmeleistung während der Temperaturbeanspruchung
Temperaturklassen der Wärmeabzugsgeräte:	F200, F300 und 300 °C/120 Minuten
Hinweis:	Der vorliegende Nachweis ersetzt kein Konformitätszertifikat nach DIN EN 12101-3 : Juni 2002

Die Beschreibung der Prüfergebnisse sowie der Motoren sind in den folgenden Prüfberichten Nr.: (3731/858/13-D5.1) – Schy und (3731/858/13-D5.2) – Schy beschrieben.

Dr.-Ing. Blume
Leiter der Prüfstelle

i.A. Ing. Schynawa
Sachbearbeiter

Braunschweig, 07.08.2013

The motors are manufactured with aluminum or cast-iron housings depending on their frame sizes. The smoke-extraction motors are based on the standard motors and comprise the following motor types:

Temperature/time classes F200 and F300

- **Self-ventilated motors** - Aluminum series 1PC1300 and cast-iron series 1PC1301 - Version with integrated fan (metal)
- **Forced-air cooled motors** – Aluminum series 1PC1300 and cast-iron series 1PC1301 (in each case Article No. with **-Z** and order code **F90**) – Version without integrated fan; located in the air flow of the driven fan

The resonance of mountings and reactions from driven machines can cause high levels of vibration in the overall equipment unit. This has a significant effect on the expected service life of the bearing.

These vibrations are evaluated during continuous operation in accordance with Zones A and B according to ISO 10816.

To ensure safe operation of fans under standardized test conditions of 300 °C for a duration of 2 hours, the following limit values for radial vibrations on the bearing plate must be maintained even under these conditions.

Maximum admissible vibration values under standardized test conditions at 300 °C for a duration of 2 h in the test laboratory.

Frame size	Vibration velocity mm/s
80 ... 112	15
132 ... 200	20
225 ... 315	25

© Siemens AG 2015

Benefits

The smoke-extraction motors operate as so-called "Dual-function motors":

- Normal operation (no instance of fire): Incoming/outgoing air flow
- Fault operation (in case of fire):
  - Removal of smoke from escape and access routes
  - Supporting fire fighting by creating a smoke-free zone
  - Protecting devices and equipment
  - Reducing the heat stress of components during a fire
  - Reducing secondary damage due to thermal byproducts and hot gases.

Admissible normal operating temperature:

-20 °C … 40 °C as standard

The smoke-extraction motors offer the user a number of advantages:

- The assignment of standard outputs is unchanged – this means that a larger construction size is not required for smoke-extraction motors
- IE2 and IE3 efficiency grades comply with the European EUP Directive
- Smoke-extraction motors are generally equipped with located bearings at the drive-end (DE) of the motor
- A fire event plate is screwed onto the motor
- Freely protruding cables are included in the scope of supply
- Radial-flow and axial-flow fan drive are possible
  - Self-ventilated 1PC1300 and 1PC1301 series motors with a metal fan impeller can be used as radial-flow fan drives
  - Forced-air cooled 1PC1300 and 1PC1301 series motors can be implemented as axial flow fan drives (in each case Article No. with **-Z** and order code **F90**) taking into account the required volumetric flow for motor cooling. In this case the driven fan performs the ventilation.

Application

The smoke-extraction motors are designed for use in automatic smoke and heat extraction units to EN 12101-3. Typical application examples include:

- Tunnels
- Single and multi-storey shopping centers
- Industrial buildings and warehouses
- Building complexes and atriums
- Theaters
- Indoor car parks
- Staircases

Technical specifications

Standards and regulations

In addition to the relevant standards and regulations, EN 12101-3 applies for non-portable fire-fighting systems:

Systems for controlling smoke and heat flows, part 3, specifications for smoke and heat extraction units.

Voltage and frequency

Rated voltages according to IEC 60038

- 230 VΔ 50 Hz
- 400 VΔ 50 Hz and 400 VY 50 Hz
- 500 VΔ 50 Hz and 500 VY 50 Hz
- 690 VY 50 Hz

Non-standard voltages (voltage codes **9** in position 12 of Article No., **0** in position 13 of Article No. and order code **M1Y**) as well as 60 Hz on request for 4 to 6-pole machines. Converter operation is permissible up to a line voltage of $U_{rated} \leq 460$ V (see section "Insulation system").
Measures must be implemented in the plant by the system supplier for switchover to line operation in the event of a fire.

The following rating plates are available for the smoke-extraction motors:

- Rating plate
  For the listed rated voltages with 50 Hz output data including information on bearing types and optional regreasing data
- Fire event plate
  Complete with number and year of issue of the European standard, temperature/time class and minimum duration of function.

All plates are resistant to corrosion. A second set of plates is included with the motor, loose.

Rated output, duty type, number of poles

The rated output applies for continuous duty (normal duty) according to IEC 60034-1, for a frequency of 50 Hz, ambient temperatures up to 40 °C and installation altitudes up to 1000 m above sea level.

Derating is necessary at higher ambient temperatures and installation altitudes (reduction factor k_{HT}), see table below.

Reduction factor k_{HT} for different installation altitudes and/or coolant temperatures

Reduction factor k_{HT}						
Installation altitude above **sea level**	Ambient temperature in °C					
m	< 30 °C	30 … 40 °C	45 °C	50 °C	55 °C	60 °C
1000	1.07	1.00	0.96	0.92	0.87	0.82
1500	1.04	0.97	0.93	0.89	0.84	0.79
2000	1.00	0.94	0.9	0.86	0.82	0.77
2500	0.96	0.90	0.86	0.83	0.78	0.74
3000	0.92	0.86	0.82	0.79	0.75	0.70
3500	0.88	0.82	0.79	0.75	0.71	0.67
4000	0.82	0.77	0.74	0.71	0.67	0.63

Coolant temperature and installation altitude are rounded to 5 °C and 500 m respectively

© Siemens AG 2015

Technical specifications (continued)

Operation in the event of a fire

In addition to normal duty, operation in the event of a fire as specified in EN 12101-3 is available.

At the end of the fire incident, the motor may be unfit for normal duty. **For this reason, regulations stipulate that the motor be replaced as a matter of course.**

In the event of a fire, any "thermal motor protection" must be deactivated.

Standard number of poles

2, 4 and 6
For more poles and pole-changing motors, please inquire.

Insulation system

The special insulation systems are adapted to the respective temperature/time classes.

The insulation of the smoke-extraction motors is designed such that converter operation is permissible for line voltages ≤ 460 V.

In all operating states, the following limit values (voltage values are peak values) must be maintained:
$\hat{U}_{\text{phase-to-phase}} \leq 1500$ V, $\hat{U}_{\text{phase-to-ground}} \leq 1100$ V,
voltage rise times of $t_s > 0.1$ µs.

In the event of a fire, the motors must be switched over from converter operation to line operation. If converter operation is also required in the event of a fire, this must be ensured through system testing and full acceptance testing by the fan manufacturer.

Drainage holes

Generally available; but closed if ordered according to IP55 degree of protection.

Bearing plates

All bearing plates of types of construction IM B3, IM B5 and IM B14 are cast-iron.

For smoke-extraction motors it is also possible to order on request the special types of construction IM B30 (horizontal type of construction) as well as IM V30 and IM V31 (both vertical types of construction) in accordance with EN 60034-7. (clamp mounting, pad mounting, shaft fan mounting)

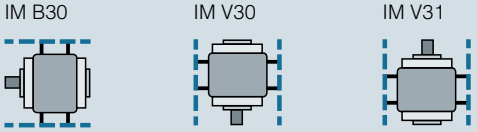

On the motor side, either 3 or 4 radial mounting threads can be provided on the housing or the IM B3 bearing plates at DE and NDE. These can be used to fix the motor centrally inside a pipe or a fan unit.

Connection system

Protruding cable with casing, without terminal box with cover plate or "nozzle cap". The cable length, core ends and diameter depend on the frame size.

Frame size	Rated output	Number of cores	Cross-section	Length	Cable diameter ± 1 mm
	kW		mm^2	m	mm
80 … 112	0.37 … 4	7	1.5	1	12
132	3 … 7.5	7	1.5	1.5	12
160	7.5 … 18	7	4	1.5	16
180 … 200	15 … 37	7	10	1.5	25
225 … 280	30 … 55	7	10	2.5	25
280 … 315	75 … 90	2 × 4	16	2.5	24
315	110 … 132	2 × 4	3 × 35 + 25	2.5	33
315	160 … 200	2 × 4	3 × 50 + 25	2.5	38

Special versions of connecting cables are available on request.

Location of the terminal box base

Frame sizes 80 to 315:

- Top and at drive end (DE) as standard
  16th position of Article No. digit 4.
- Terminal box base on RHS
  16th position of Article No. digit 5.
- Terminal box base on LHS
  16th position of Article No. digit 6.
- Terminal box base below (not possible for IM B3)
  16th position of Article No. digit 7.

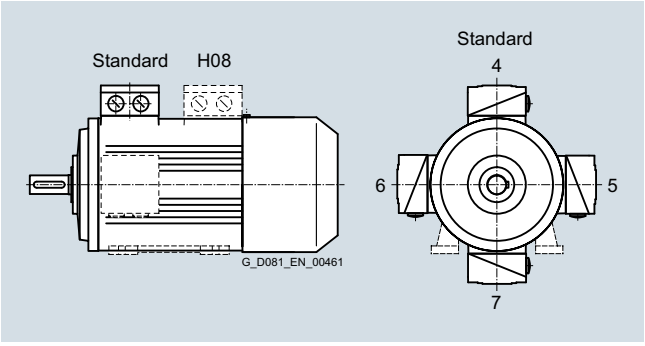

Location of terminal box base with corresponding digits in the 16th position of Article No. 0° position of cable outlet

Optional: Terminal box base at NDE
– Order code **H08**

When the terminal box base is rotated to the non-drive end of the motor, it is important to note that dimensions "C" and "CA" will not comply with the values specified in EN 50347. Please request a dimension drawing.

Direction of cable outlet

- Frame sizes 80 to 160 (aluminum):
  Further routing of the connecting cable only in radial direction with respect to the position of the terminal box base.
- Frame sizes 180 to 315 (cast-iron):
  Further routing of the connecting cable towards NDE
  Option **R11** with respect to the position of the terminal box base.
  Other options are also possible after **R12** or **R13**.
  R13 = Cable entry in 0° position as shown in diagram.

© Siemens AG 2015

Technical specifications (continued)

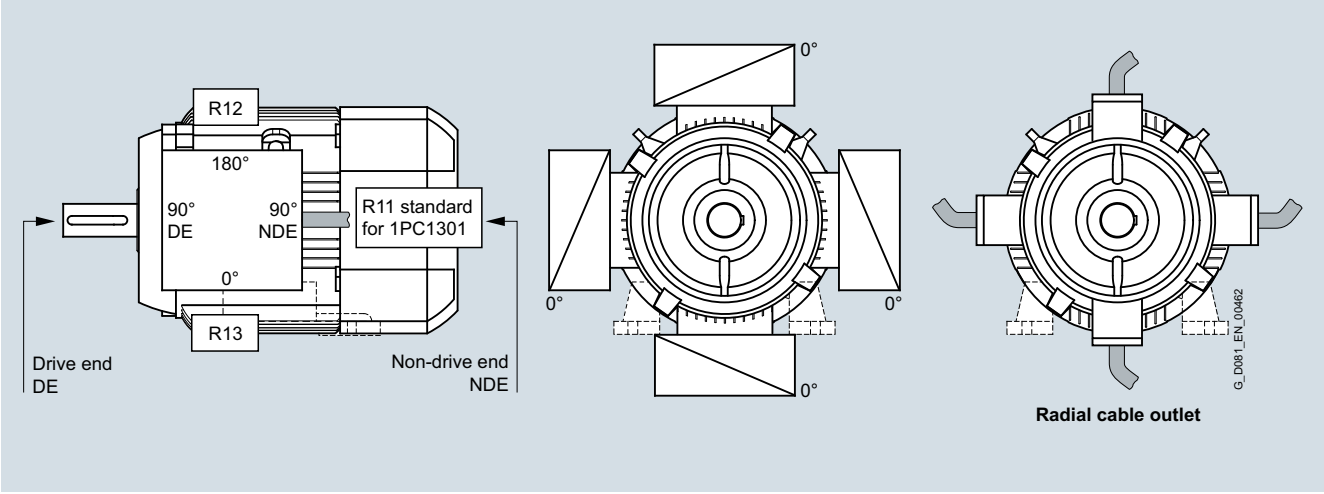

Location of the cable entries with corresponding order codes. The equipment is grounded with a protruding cable.

Bearings, grease

Special bearing systems are used.

Deep-groove bearings of series 60, 62 or 63 without play are used depending on the individual frame sizes.

The located bearing is generally at the drive-end (DE).

The nominal bearing lifetime $L_{10\,h}$ (fan drive) is at least 20 000 hours at full rated load.

The motors of frame sizes 80 to 250 generally have bearings that are greased for life.

Paint finish

The motors are shipped as standard with a two-component finish (worldwide) in the color RAL 7030.

Required minimum cooling air flow in standard duty

Required cooling air flow for 1PC1300/1PC1303 motors			
Frame size	No. of poles		
	2 m^3/min	4 m^3/min	6 m^3/min
80	1.36	0.66	0.42
90	2.66	1.34	0.87
100	3.8	2.1	1.5
112	5.0	2.9	1.9
132	6.3	4.6	3.1
160	10.9	6.7	5

Required cooling air flow for 1PC1301/1PC1304 motors			
Frame size	No. of poles		
	2 m^3/min	4 m^3/min	6 m^3/min
180	12.4	7.8	5.2
200	14.3	10.6	7.9
225	21.5	18.5	15
250	30	20	20
280	26.5	32	24
315	40	40	30

In the motor version without an integrated fan (with order code **F90**), the motor is located in the airflow of the driven fan that must drive the minimum cooling airflow over the motor housing. The operating temperature of the motor can be reduced at higher air flow rates. The decisive factor for the effectiveness of the increased cooling airflow is the actual increase in the winding temperature during rated operation.

Permissible loading on the shaft extension

The values specified in the table "Admissible loading on shaft extension" are the tested and approved maximum values (test duration two hours, temperature in case of fire 300 °C).

In standard duty at coolant temperatures up to 40 °C, a bearing lifetime L_{10h} > 20 000 hours was achieved.

The values apply to all horizontal mounting positions and to all vertical mounting positions with shaft pointing downwards.

Please inquire in the case of :

- Higher force pairings
- Motors with more poles
- Vertical arrangement, depending on the rotor mass and mounting location (shaft pointing downwards or shaft pointing upwards) of the smoke-extraction motor. If necessary, higher forces can be approved.

© Siemens AG 2015

Technical specifications (continued)

Permissible loading on the shaft extension in the event of fire

Frame size	Bearings DE	Type of loading on shaft No.		Horizontal shaft 2-pole F_R N	2-pole $F_{A\ ten}$ N	4-pole F_R N	4-pole $F_{A\ ten}$ N	6-pole F_R N	6-pole $F_{A\ ten}$ N	Shaft pointing vertically downwards 2-pole F_R N	2-pole $F_{A\ ten}$ N	4-pole F_R N	4-pole $F_{A\ ten}$ N	6-pole F_R N	6-pole $F_{A\ ten}$ N
80	6204	1	Radial force	400	0	490	0	540	0	360	0	450	0	540	0
		2	Radial force + axial tensile force	150	130	170	170	190	200	40	172	40	225	40	275
		3	Axial tensile force	0	215	0	265	0	320	0	197	0	250	0	300
90	6205	1	Radial force	650	0	730	0	795	0	590	0	730	0	795	0
		2	Radial force + axial tensile force	250	205	280	260	310	305	100	259	100	330	100	390
		3	Axial tensile force	0	343	0	415	0	480	0	310	0	384	0	450
100	6206	1	Radial force	890	0	1000	0	1080	0	820	0	1000	0	1080	0
		2	Radial force + axial tensile force	400	265	500	325	600	345	300	265	300	385	300	455
		3	Axial tensile force	0	490	0	600	0	675	0	432	0	540	0	625
112	6206	1	Radial force	870	0	980	0	1055	0	760	0	970	0	1055	0
		2	Radial force + axial tensile force	400	252	500	310	600	330	250	260	250	380	250	450
		3	Axial tensile force	0	478	0	595	0	675	0	403	0	510	0	590
132	6208	1	Radial force	1070	0	1415	0	1530	0	810	0	1060	0	1220	0
		2	Radial force + axial tensile force	450	315	550	450	650	480	250	300	250	520	250	585
		3	Axial tensile force	0	580	0	775	0	850	0	450	0	640	0	820
160	6209	1	Radial force	1440	0	1630	0	1760	0	1210	0	1580	0	1780	0
		2	Radial force + axial tensile force	700	450	800	570	900	650	500	335	500	525	500	665
		3	Axial tensile force	0	824	0	1015	0	1140	0	620	0	790	0	920
180	6210	1	Radial force	1540	0	1750	0	1900	0	1020	0	1400	0	1670	0
		2	Radial force + axial tensile force	770	430	900	545	1000	630	550	218	550	420	550	575
		3	Axial tensile force	0	815	0	1040	0	1183	0	453	0	733	0	875
200	6212	1	Radial force	2050	0	2380	0	2620	0	1450	0	1700	0	2090	0
		2	Radial force + axial tensile force	1200	770	1350	970	1500	1075	500	460	500	750	500	1600
		3	Axial tensile force	0	1350	0	1650	0	1875	0	720	0	1040	0	1905
225	6213	1	Radial force	2460	0	2720	0	2970	0	1910	0	2450	0	2900	0
		2	Radial force + axial tensile force	1370	900	1500	1095	1700	1200	500	660	500	1000	500	1250
		3	Axial tensile force	0	1560	0	1910	0	2170	0	920	0	1290	0	1520
250	6215	1	Radial force	2770	0	3230	0	3500	0	1490	0	2230	0	2700	0
		2	Radial force + axial tensile force	1400	840	1600	1095	1800	1340	500	460	500	815	500	1080
		3	Axial tensile force	0	1500	0	1865	0	2130	0	710	0	1090	0	1375
280	6315 (2-pole), 6317 (4, 6-pole)	1	Radial force	3180	0	5000	0	5500	0	3000	0	5600	0	6100	0
		2	Radial force + axial tensile force	1700	1820	2000	2000	2300	2200	600	1085	600	2300	600	2750
		3	Axial tensile force	0	2630	0	3050	0	3500	0	1380	0	2600	0	3100
315	6316 (2-pole), 6319 (4, 6-pole)	1	Radial force	3470	0	5300	0	5900	0	1000	0	3600	0	3850	0
		2	Radial force + axial tensile force	1750	2200	2000	2170	2300	2530	200	363	1000	1150	1000	1610
		3	Axial tensile force	0	3000	0	3080	0	3560	0	463	0	1690	0	2100

Note:

In the event of a fault (fire), the reduced loads given above must be observed and ensured by appropriate measures in the ventilation system.

Under normal operating conditions (CT 40 °C), the admissible loads specified in part 1 of the catalog under "Bearings and lubrication" must be complied with.

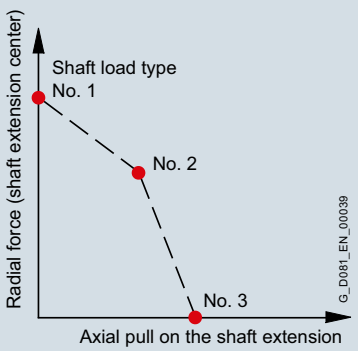

Load types

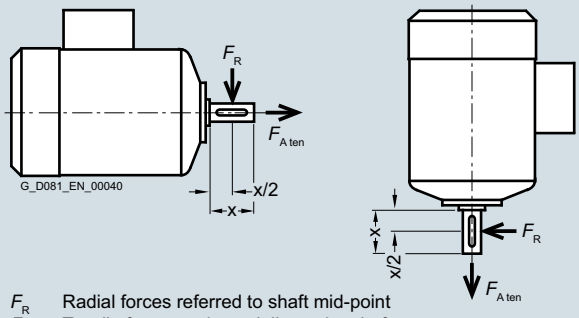

Forces on shaft extension

© Siemens AG 2015

Selection and ordering data

The article number consists of a combination of digits and letters and is divided into three hyphenated blocks to provide a better overview, e.g.:
1PC1301-1EB22-2FB4-Z
L22

The first block (positions 1 to 7) identifies the motor type; the second block (positions 8 to 12) defines the motor frame size and length, the number of poles and in some cases the frequency/output; and in the third block (positions 13 to 16), the frequency/output, type of construction and other design features are encoded.

For deviations in the second and third block from the catalog codes, either **Z** or **90** should be used as appropriate.

Ordering data:

- Complete Article No. and order code(s) or plain text
- If a quotation has been requested, please specify the quotation number in addition to the Article No.
- When ordering a complete motor as a spare part, please specify the works serial No. for the previously supplied motor as well as the Article No.

Structure of the Article No.:		Position:	1	2	3	4	5	6	7	-	8	9	10	11	12	-	13	14	15	16		
Positions 1 to 5: Digit, letter, letter, digit, digit	Self-ventilated smoke-extraction motors with IE2 High Efficiency (For forced-air cooled version specify Article No. with -Z and order code F90)		**1**	**P**	**C**	**1**	**3**															
Positions 6 to 7: 2 digits	Aluminum housing, IE2, single-speed							**0**	**0**													
	Cast-iron housing, IE2, single-speed							**0**	**1**													
	Aluminum housing, IE3, single-speed							**0**	**3**													
	Cast-iron housing, IE3, single-speed							**0**	**4**													
Positions 8, 9 and 11: Digit, letter, digit	**Motor frame size** (frame size as a combination of shaft height and overall length, encoded)										**0** ... **3**	**A** ... **E**		**0** ... **6**								
Position 10: Letter	**No. of poles** A: 2-pole, B: 4-pole, C: 6-pole												**A** ... **C**									
Positions 12 and 13: 2 digits	**Voltage, circuit and frequency** (encoded with two digits, 9-0 requires order code M.. (e. g. M1Y))														**0** ... **9**		**0** ... **7**					
Position 14: Letter	**Type of construction** (encoded with A ... Z; Z requires order code P.. (e. g. P3A))																	**A** ... **Z**				
Position 15: Letter	**Motor protection** (encoded with A ... D)																		**A** ... **D**			
Position 16: Digit	**Terminal box position** 4: Terminal box top, 5: Terminal box right, 6: Terminal box left, 7: Terminal box below																			**4** ... **7**		
	Special order versions: encoded – additional order code required not encoded – additional plain text required																				-	**Z**

Ordering example

Selection criteria	Requirement	Structure of the Article No.
Motor type 1PC1304	Self-ventilated smoke-extraction motor, cast-iron version, with High Efficiency IE3, IP55 degree of protection	**1PC1304-■■■■■-■■■■**
Motor frame size/No. of poles/Speed	180 M/4-pole/1500 rpm^{-1}	**1PC1304-1EB2■-■■■■**
Rated output	18.5 kW	
Voltage and frequency	230 VΔ/400 VY, 50 Hz	**1PC1304-1EB22-2■■■**
Type of construction with special version	IM B5	**1PC1304-1EB22-2F■■**
Motor protection	Motor protection with PTC thermistor with 3 embedded temperature sensors for tripping	**1PC1304-1EB22-2FB■**
Terminal box position	Terminal box at top	**1PC1304-1EB22-2FB4**
Special version	Bearing design for increased cantilever forces	**1PC1304-1EB22-2FB4-Z** **L22**

5

© Siemens AG 2015

Selection and ordering data

P_{rated}, 50 Hz	P_{rated}, 60 Hz	Frame size	Operating values at rated output: n_{rated}, 50 Hz	T_{rated}, 50 Hz	IE class	η_{rated}, 50 Hz, 4/4	η_{rated}, 50 Hz, 3/4	η_{rated}, 50 Hz, 2/4	cos φ_{rated}, 50 Hz, 4/4	I_{rated}, 50 Hz, 400 V	T_{LR}/T_{rated}	I_{LR}/I_{rated}	T_B/T_{rated}	L_{pfA}, 50 Hz	L_{WA}, 50 Hz	**Aluminum series** **1PC1300** – *IE2 version according to IEC 60034-30* Article No.	$m_{IM\ B3}$	J	Torque class
kW	kW	FS	rpm	Nm		%	%	%		A				dB(A)	dB(A)		kg	kgm²	CL
• Cooling: self-ventilated (IC411) or with order code F90 forced-air cooled without external fan and fan cover (IC416) • Efficiency: IE2 High Efficiency, service factor (SF) 1.15 • Insulation: thermal class 180 (temperature class H), IP55 degree of protection, utilization in accordance with thermal class 130 (temperature class B)																			
2-pole: 3000 rpm at 50 Hz																			
0.75	**–**	**80 M**	2805	2.6	IE2	77.4	79.5	78.8	0.84	1.67	1.9	4.9	2.3	60	71	**1PC1300-0DA2■-■■■■**	9	0.00080	16
1.1	**–**	**80 M**	2835	3.7	IE2	79.6	81.3	80.8	0.83	2.40	2.7	6.0	3.1	60	71	**1PC1300-0DA3■-■■■■**	11	0.0011	16
1.5	**–**	**90 S**	2885	5.0	IE2	81.3	82.3	80.8	0.84	3.15	2.7	6.9	3.6	65	77	**1PC1300-0EA0■-■■■■**	13	0.0017	16
2.2	**–**	**90 L**	2890	7.3	IE2	83.2	83.9	82.3	0.85	4.5	2.5	7.1	3.7	65	77	**1PC1300-0EA4■-■■■■**	15	0.0021	16
3	**–**	**100 L**	2905	9.9	IE2	84.6	85.2	84.7	0.84	6.1	2.3	7.0	3.3	67	79	**1PC1300-1AA4■-■■■■**	21	0.0044	16
4	**–**	**112 M**	2950	13	IE2	85.8	86.7	86.1	0.86	7.8	2.4	7.4	3.3	69	81	**1PC1300-1BA2■-■■■■**	27	0.0092	16
5.5	**–**	**132 S**	2950	18	IE2	87.0	88.0	87.4	0.87	10.5	1.8	6.6	2.9	68	80	**1PC1300-1CA0■-■■■■**	39	0.020	16
7.5	**–**	**132 S**	2950	24	IE2	88.1	88.7	88.6	0.87	14.1	2.2	7.5	3.1	68	80	**1PC1300-1CA1■-■■■■**	43	0.024	16
11	**–**	**160 M**	2955	36	IE2	89.4	90.0	89.1	0.87	20.5	2.1	7.4	3.2	70	82	**1PC1300-1DA2■-■■■■**	67	0.045	16
15	**–**	**160 M**	2955	48	IE2	90.3	90.9	90.3	0.88	27	2.4	7.6	3.4	70	82	**1PC1300-1DA3■-■■■■**	75	0.053	16
18.5	**–**	**160 L**	2955	60	IE2	90.9	91.2	90.4	0.88	33.5	2.9	7.9	3.6	70	82	**1PC1300-1DA4■-■■■■**	84	0.061	16
4-pole: 1500 rpm at 50 Hz																			
0.55	**–**	**80 M**	1440	3.7	IE2	77.1	76.8	73.7	0.74	1.39	2.2	5.3	3.1	53	64	**1PC1300-0DB2■-■■■■**	10	0.0017	16
0.75	**–**	**80 M**	1440	5.0	IE2	79.6	80.2	78.0	0.76	1.79	2.2	5.6	3.1	53	64	**1PC1300-0DB3■-■■■■**	11	0.0021	16
1.1	**–**	**90 S**	1425	7.4	IE2	81.4	81.7	79.9	0.78	2.5	2.3	5.6	2.9	56	68	**1PC1300-0EB0■-■■■■**	13	0.0028	16
1.5	**–**	**90 L**	1435	10	IE2	82.8	83.5	82.0	0.79	3.3	2.6	6.4	3.4	56	68	**1PC1300-0EB4■-■■■■**	16	0.0036	16
2.2	**–**	**100 L**	1455	14	IE2	84.3	85.1	84.3	0.81	4.65	2.1	6.9	3.3	60	72	**1PC1300-1AB4■-■■■■**	21	0.0086	16
3	**–**	**100 L**	1455	20	IE2	85.5	86.7	86.0	0.82	6.2	2.0	6.9	3.1	60	72	**1PC1300-1AB5■-■■■■**	25	0.011	16
4	**–**	**112 M**	1460	26	IE2	86.6	87.3	86.5	0.81	8.2	2.5	7.1	3.2	58	70	**1PC1300-1BB2■-■■■■**	29	0.014	16
5.5	**–**	**132 S**	1465	36	IE2	87.7	89.0	87.7	0.80	11.3	2.3	6.9	2.9	64	76	**1PC1300-1CB0■-■■■■**	42	0.027	16
7.5	**–**	**132 M**	1465	49	IE2	88.7	90.3	88.8	0.83	14.7	2.3	6.9	2.9	64	76	**1PC1300-1CB2■-■■■■**	49	0.034	16
11	**–**	**160 M**	1470	71	IE2	89.8	90.9	90.8	0.85	21	2.1	6.7	2.8	65	77	**1PC1300-1DB2■-■■■■**	71	0.065	16
15	**–**	**160 L**	1475	97	IE2	90.6	91.3	91.0	0.85	28	2.3	7.3	3.0	65	77	**1PC1300-1DB4■-■■■■**	83	0.083	16

Voltages		**Motor protection**	No. of poles	Frame size	Motor type	Version				Order code(s)
Frame sizes 80 M to 160 L: Cover plate rotatable 4 x 90°										
50 Hz	230 VΔ/400 VY	Any	2, 4	80 M ... 160 L	1PC1300-0D ... -1D	**Standard**	**2**	**2**		–
50 Hz	400 VΔ/690 VY	Any	2, 4	80 M ... 160 L	1PC1300-0D ... -1D	**Standard**	**3**	**4**		–
50 Hz	500 VY	Any	2, 4	80 M ... 160 L	1PC1300-0D ... -1D	Without add. charge	**2**	**7**		–
50 Hz	500 VΔ	Any	2, 4	100 L ... 160 L	1PC1300-1A ... -1D	Without add. charge	**4**	**0**		–
Further voltages [1]		For price information, code numbers, order codes and descriptions, see Page 5/16					**9**	**0**		. . .
Types of construction			No. of poles	Frame size	Motor type	Version				Order code(s)
Without flange	IM B3 [2]		2, 4	80 M ... 160 L	1PC1300-0D ... -1D	**Standard**			**A**	–
With flange	IM B5 [2]		2, 4	80 M ... 160 L	1PC1300-0D ... -1D	With additional charge			**F**	–
With standard flange	IM B14 [2]		2, 4	80 M ... 160 L	1PC1300-0D ... -1D	With additional charge			**K**	–
Further types of construction		For price information, code letters and descriptions, see from Page 5/17							■	. . .
Motor protection			No. of poles	Frame size	Motor type	Version				Order code(s)
Frame sizes 80 M to 160 L: Cover plate rotatable 4 x 90°										
Without			2, 4	80 M ... 160 L	1PC1300-0D ... -1D	**Standard**			**A**	–
PTC thermistor with 1 or 3 temperature sensors			2, 4	80 M ... 160 L	1PC1300-0D ... -1D	With additional charge			**B**	–
Further motor protection		For price information, code letters and descriptions, see Page 5/20							■	. . .
Terminal box position			No. of poles	Frame size	Motor type	Version				Order code(s)
Terminal box at top			2, 4	80 M ... 160 L	1PC1300-0D ... -1D	**Standard**			**4**	–
Further terminal box positions		For price information, code numbers and descriptions, see Page 5/21								
Special versions			No. of poles	Frame size	Motor type					Order code(s)
Forced-air cooled motors without ext. fan/fan cover (IC416)			2, 4	80 M ... 160 L	1PC1300-0D ... -1D	**1PC1300-. . . . ■-■■■■-Z**				**F90** +. . .+. . .+. . .
Options		For price information, order codes and descriptions, see from Page 5/22				**1PC1300-. . . . ■-■■■■-Z**				. . .+. . .+. . .+. . .

[1] Operating values at rated output for 60 Hz (4 and 6-pole) are stored in the Drive Technology (DT) Configurator.

[2] Types derived from IM B3 (IM B6/7/8, IM V6 and IM V5), from IM B5 (IM V3 and IM V1) and from IM B14 (IM V19 and IM V18) are possible, provided that no requirements exist for condensation drainage holes (**H03**) and stamping of the type on the rating plate. The basic type IM B3, IM B5 or IM B14 is stamped as standard on the rating plate. When ordering with condensation drainage holes (**H03**), the type must be specified.

© Siemens AG 2015

Selection and ordering data (continued)

P_{rated}, 50 Hz	P_{rated}, 60 Hz	Frame size	Operating values at rated output: n_{rated}, 50 Hz	T_{rated}, 50 Hz	IE class	η_{rated}, 50 Hz, 4/4	η_{rated}, 50 Hz, 3/4	η_{rated}, 50 Hz, 2/4	cos φ_{rated}, 50 Hz, 4/4	I_{rated}, 50 Hz, 400 V	T_{LR}/T_{rated}	I_{LR}/I_{rated}	T_B/T_{rated}	L_{pfA}, 50 Hz	L_{WA}, 50 Hz	**Aluminum series 1PC1300** – *IE2 version according to IEC 60034-30* Article No.	$m_{IM\ B3}$	J	Torque class
kW	kW	FS	rpm	Nm		%	%	%		A				dB(A)	dB(A)		kg	kgm²	CL
• Cooling: self-ventilated (IC411) or with order code F90 forced-air cooled without external fan and fan cover (IC416) • Efficiency: IE2 High Efficiency, service factor (SF) 1.15 • Insulation: thermal class 180 (temperature class H), IP55 degree of protection, utilization in accordance with thermal class 130 (temperature class B)																			
6-pole: 1000 rpm at 50 Hz																			
0.37	–	**80 M**	925	3.85	IE2	67.6	67.9	64.4	0.69	1.14	2.1	4.0	2.4	42	53	**1PC1300-0DC2■-■■■■**	9	0.0017	16
0.55	–	**80 M**	935	5.6	IE2	73.1	73.0	69.6	0.66	1.65	2.5	4.4	2.9	42	53	**1PC1300-0DC3■-■■■■**	12	0.0025	16
0.75	–	**90 S**	925	7.7	IE2	75.9	76.0	73.0	0.70	2.05	2.0	4.1	2.5	43	55	**1PC1300-0EC0■-■■■■**	13	0.0030	16
1.1	–	**90 L**	935	11.2	IE2	78.1	78.5	75.0	0.70	2.90	2.2	4.4	2.6	43	55	**1PC1300-0EC4■-■■■■**	16	0.0040	16
1.5	–	**100 L**	970	15	IE2	79.8	80.2	79.0	0.73	3.7	2.0	6.2	2.9	59	71	**1PC1300-1AC4■-■■■■**	25	0.011	16
2.2	–	**112 M**	965	22	IE2	81.8	82.5	81.3	0.75	5.2	2.1	6.0	3.1	57	69	**1PC1300-1BC2■-■■■■**	29	0.014	16
3	–	**132 S**	970	30	IE2	83.3	84.0	82.8	0.74	7.0	1.6	5.6	2.6	63	75	**1PC1300-1CC0■-■■■■**	38	0.024	13
4	–	**132 M**	970	39	IE2	84.6	85.8	85.0	0.78	8.7	1.6	5.6	2.5	63	75	**1PC1300-1CC2■-■■■■**	43	0.029	13
5.5	–	**132 M**	970	54	IE2	86.0	87.4	87.0	0.77	12	1.9	6.1	2.8	63	75	**1PC1300-1CC3■-■■■■**	52	0.037	16
7.5	–	**160 M**	975	73	IE2	87.2	87.7	86.9	0.77	16.1	1.8	6.3	2.8	67	79	**1PC1300-1DC2■-■■■■**	77	0.075	16
11	–	**160 L**	975	108	IE2	88.7	89.5	89.4	0.80	22.5	1.7	6.2	2.7	67	79	**1PC1300-1DC4■-■■■■**	93	0.098	16

Voltages		No. of poles	Frame size	Motor type	Version			Order code(s)
Frame sizes 80 M to 160 L: Cover plate rotatable 4 x 90°								
50 Hz	230 VΔ/400 VY	6	80 M ... 160 L	1PC1300-0D ... -1D	**Standard**	**2**	**2**	–
50 Hz	400 VΔ/690 VY	6	80 M ... 160 L	1PC1300-0D ... -1D	**Standard**	**3**	**4**	–
50 Hz	500 VY	6	80 M ... 160 L	1PC1300-0D ... -1D	Without add. charge	**2**	**7**	–
50 Hz	500 VΔ	6	100 L ... 160 L	1PC1300-1A ... -1D	Without add. charge	**4**	**0**	–
Further voltages [1]		For price information, code numbers, order codes and descriptions, see Page 5/16				**9**	**0**	. . .

Types of construction		No. of poles	Frame size	Motor type	Version		Order code(s)
Without flange	IM B3 [2]	6	80 M ... 160 L	1PC1300-0D ... -1D	**Standard**	**A**	–
With flange	IM B5 [2]	6	80 M ... 160 L	1PC1300-0D ... -1D	With additional charge	**F**	–
With standard flange	IM B14 [2]	6	80 M ... 160 L	1PC1300-0D ... -1D	With additional charge	**K**	–
Further types of construction		For price information, code letters and descriptions, see from Page 5/17				**■**	. . .

Motor protection	No. of poles	Frame size	Motor type	Version		Order code(s)
Frame sizes 80 M to 160 L: Cover plate rotatable 4 x 90°						
Without	6	80 M ... 160 L	1PC1300-0D ... -1D	**Standard**	**A**	–
PTC thermistor with 1 or 3 temperature sensors	6	80 M ... 160 L	1PC1300-0D ... -1D	With additional charge	**B**	–
Further motor protection	For price information, code letters and descriptions, see Page 5/20				**■**	. . .

Terminal box position	No. of poles	Frame size	Motor type	Version		Order code(s)
Terminal box at top	6	80 M ... 160 L	1PC1300-0D ... -1D	**Standard**	**4**	–
Further terminal box positions	For price information, code numbers and descriptions, see Page 5/21					

Special versions	No. of poles	Frame size	Motor type			Order code(s)
Forced-air cooled motors without ext. fan/fan cover (IC416)	6	80 M ... 160 L	1PC1300-0D ... -1D	**1PC1300 - . . . . ■-■■■■**	**-Z**	**F90 +. . .+. . .+. . .**
Options	For price information, order codes and descriptions, see from Page 5/22			**1PC1300 - . . . . ■-■■■■**	**-Z**	**. . .+. . .+. . .+. . .**

[1] Operating values at rated output for 60 Hz (4 and 6-pole) are stored in the Drive Technology (DT) Configurator.

[2] Types derived from IM B3 (IM B6/7/8, IM V6 and IM V5), from IM B5 (IM V3 and IM V1) and from IM B14 (IM V19 and IM V18) are possible, provided that no requirements exist for condensation drainage holes (**H03**) and stamping of the type on the rating plate. The basic type IM B3, IM B5 or IM B14 is stamped as standard on the rating plate. When ordering with condensation drainage holes (**H03**), the type must be specified.

© Siemens AG 2015

Selection and ordering data

P_{rated}, 50 Hz	P_{rated}, 60 Hz	Frame size	Operating values at rated output: n_{rated}, 50 Hz	T_{rated}, 50 Hz	IE class	η_{rated}, 50 Hz, 4/4	η_{rated}, 50 Hz, 3/4	η_{rated}, 50 Hz, 2/4	cos φ_{rated}, 50 Hz, 4/4	I_{rated}, 50 Hz, 400 V	T_{LR}/T_{rated}	I_{LR}/I_{rated}	T_B/T_{rated}	L_{pfA}, 50 Hz	L_{WA}, 50 Hz	**Cast-iron series 1PC1301** – *IE2 version according to IEC 60034-30* Article No.	$m_{IM\ B3}$	J	Torque class
kW	kW	FS	rpm	Nm		%	%	%		A				dB(A)	dB(A)		kg	kgm²	CL
• Cooling: self-ventilated (IC411) or with order code F90 forced-air cooled without external fan and fan cover (IC416) • Efficiency: IE2 High Efficiency, service factor (SF) 1.15 • Insulation: thermal class 180 (temperature class H), IP55 degree of protection, utilization in accordance with thermal class 130 (temperature class B)																			
2-pole: 3000 rpm at 50 Hz																			
22	–	**180 M**	2940	71	IE2	91.3	91.8	91.4	0.87	40.5	2.7	7.4	3.6	68	81	**1PC1301-1EA2■-■■■■**	145	0.069	16
30	–	**200 L**	2955	97	IE2	92.0	92.3	91.7	0.87	54	2.5	6.9	3.3	71	84	**1PC1301-2AA4■-■■■■**	200	0.13	16
37	–	**200 L**	2960	119	IE2	92.5	92.8	92.3	0.88	66	2.7	7.4	3.5	71	84	**1PC1301-2AA5■-■■■■**	225	0.15	16
45	–	**225 M**	2965	145	IE2	92.9	93.1	92.5	0.88	79	2.7	7.8	3.7	71	84	**1PC1301-2BA2■-■■■■**	295	0.23	16
55	–	**250 M**	2970	177	IE2	93.2	93.3	92.4	0.89	96	2.3	6.8	3.1	74	88	**1PC1301-2CA2■-■■■■**	360	0.40	13
75	–	**280 S**	2978	240	IE2	93.8	93.6	92.4	0.87	133	2.5	7.2	3.2	74	88	**1PC1301-2DA0■-■■■■**	490	0.71	13
90	–	**280 M**	2975	289	IE2	94.1	94.2	93.5	0.88	157	2.5	7.1	3.1	74	88	**1PC1301-2DA2■-■■■■**	530	0.83	13
110	–	**315 S**	2982	352	IE2	94.3	94.2	93.3	0.90	187	2.4	7.3	3.0	76	90	**1PC1301-3AA0■-■■■■**	720	1.3	13
132	–	**315 M**	2982	423	IE2	94.6	94.7	94.1	0.91	220	2.4	7.2	3.1	76	90	**1PC1301-3AA2■-■■■■**	880	1.6	13
160	–	**315 L**	2982	512	IE2	94.8	94.9	94.3	0.92	265	2.3	7.0	3.1	78	93	**1PC1301-3AA4■-■■■■**	930	1.8	13
200	–	**315 L**	2982	640	IE2	95.0	95.2	94.8	0.92	330	2.4	7.1	3.0	78	93	**1PC1301-3AA5■-■■■■**	1130	2.2	13

Voltages		No. of poles	Frame size	Motor type	Version				Order code(s)
Cover plate rotatable 4 x 90°									
50 Hz	230 VΔ/400 VY	2	180 M ... 315 L	1PC1301-1E ... -3A	**Standard**	**2**	**2**		–
50 Hz	400 VΔ/690 VY	2	180 M ... 315 L	1PC1301-1E ... -3A	**Standard**	**3**	**4**		–
50 Hz	500 VY	2	180 M ... 315 L	1PC1301-1E ... -3A	Without add. charge	**2**	**7**		–
50 Hz	500 VΔ	2	180 M ... 315 L	1PC1301-1E ... -3A	Without add. charge	**4**	**0**		–
Further voltages		For price information, code numbers, order codes and descriptions, see Page 5/16				**9**	**0**		. . .
Types of construction		No. of poles	Frame size	Motor type	Version				Order code(s)
Without flange	IM B3 [1]	2	180 M ... 315 L	1PC1301-1E ... -3A	**Standard**			**A**	–
With flange	IM B5 [1]	2	180 M ... 315 M	1PC1301-1E ... -3A	With additional charge			**F**	–
Further types of construction		For price information, code letters and descriptions, see Page 5/19						■	. . .
Motor protection		No. of poles	Frame size	Motor type	Version				Order code(s)
Cover plate rotatable 4 x 90°									
Without		2	180 M ... 315 L	1PC1301-1E ... -3A	**Standard**			**A**	–
PTC thermistor with 3 temperature sensors		2	180 M ... 315 L	1PC1301-1E ... -3A	With additional charge			**B**	–
Further motor protection		For price information, code letters and descriptions, see Page 5/20						■	. . .
Terminal box position		No. of poles	Frame size	Motor type	Version				Order code(s)
Terminal box at top		2	180 M ... 315 L	1PC1301-1E ... -3A	**Standard**				–
Further terminal box positions		For price information, code numbers and descriptions, see Page 5/21						**4**	
Special versions		No. of poles	Frame size	Motor type					Order code(s)
Forced-air cooled motors without ext. fan/fan cover (IC416)		2	180 L ... 315 L	1PC1301-1E ... -3A	**1PC1301 - . . . . ■-■■■■-Z**				**F90** + . . .+. . .+. . .
Options		For price information, order codes and descriptions, see from Page 5/24			**1PC1301 - . . . . ■-■■■■-Z**				. . .+. . .+. . .+. . .

[1] Types derived from IM B3 (IM B6/7/8, IM V6 and IM V5 and from IM B5 (IM V3 and IM V1) are possible, provided that no requirement exists for stamping of the type on the rating plate. The basic type IM B3 or IM B5 is stamped as standard on the rating plate. If mounted in a different position, the position must be specified to ensure that the condensation drainage holes are positioned correctly.

© Siemens AG 2015

Selection and ordering data (continued)

P_{rated}, 50 Hz	P_{rated}, 60 Hz	Frame size	Operating values at rated output: n_{rated}, 50 Hz	T_{rated}, 50 Hz	IE class	η_{rated}, 50 Hz, 4/4	η_{rated}, 50 Hz, 3/4	η_{rated}, 50 Hz, 2/4	cos φ_{rated}, 50 Hz, 4/4	I_{rated}, 50 Hz, 400 V	T_{LR}/T_{rated}	I_{LR}/I_{rated}	T_B/T_{rated}	L_{pfA}, 50 Hz	L_{WA}, 50 Hz	**Cast-iron series 1PC1301 – *IE2 version according to IEC 60034-30* Article No.**	$m_{IM\ B3}$	J	Torque class
kW	**kW**	**FS**	rpm	Nm		%	%	%		A				dB(A)	dB(A)		kg	kgm^2	CL
• Cooling: self-ventilated (IC411) or with order code F90 forced-air cooled without external fan and fan cover (IC416) • Efficiency: IE2 High Efficiency, service factor (SF) 1.15 • Insulation: thermal class 180 (temperature class H), IP55 degree of protection, utilization in accordance with thermal class 130 (temperature class B)																			
4-pole: 1500 rpm at 50 Hz																			
18.5	**–**	**180 M**	1465	121	IE2	91.2	92.0	91.9	0.84	35	2.5	7.2	3.4	58	71	**1PC1301-1EB2■-■■■■**	160	0.12	16
22	**–**	**180 L**	1465	143	IE2	91.6	92.2	91.9	0.84	41.5	2.6	7.3	3.5	58	71	**1PC1301-1EB4■-■■■■**	170	0.13	16
30	**–**	**200 L**	1470	195	IE2	92.3	92.8	92.6	0.84	56	2.5	6.7	3.3	62	75	**1PC1301-2AB5■-■■■■**	230	0.20	16
37	**–**	**225 S**	1470	240	IE2	92.7	93.5	93.5	0.88	65	2.3	6.6	2.9	62	75	**1PC1301-2BB0■-■■■■**	280	0.42	16
45	**–**	**225 M**	1475	291	IE2	93.1	93.8	93.7	0.87	80	2.5	6.9	3.1	63	76	**1PC1301-2BB2■-■■■■**	305	0.46	16
55	**–**	**250 M**	1480	355	IE2	93.5	93.9	93.5	0.85	100	2.7	6.8	3.0	62	75	**1PC1301-2CB2■-■■■■**	385	0.75	16
75	**–**	**280 S**	1485	482	IE2	94.0	94.2	93.8	0.87	132	2.5	6.8	3.0	69	83	**1PC1301-2DB0■-■■■■**	550	1.3	16
90	**–**	**280 M**	1486	578	IE2	94.2	94.3	93.6	0.87	159	2.6	7.3	3.1	68	82	**1PC1301-2DB2■-■■■■**	570	1.4	16
110	**–**	**315 S**	1490	705	IE2	94.5	94.6	94.0	0.86	195	2.7	7.4	3.0	69	83	**1PC1301-3AB0■-■■■■**	740	2.0	16
132	**–**	**315 M**	1490	847	IE2	94.7	94.9	94.6	0.87	230	2.7	7.1	2.9	68	83	**1PC1301-3AB2■-■■■■**	870	2.3	16
160	**–**	**315 L**	1490	1025	IE2	94.9	95.0	94.5	0.87	280	2.8	7.2	3.1	72	86	**1PC1301-3AB4■-■■■■**	940	2.8	16
200	**–**	**315 L**	1490	1282	IE2	95.1	95.3	94.7	0.87	350	3.1	7.5	3.2	72	87	**1PC1301-3AB5■-■■■■**	1140	3.5	16

Voltages			No. of poles	Frame size	Motor type	Version					Order code(s)
Cover plate rotatable 4 x 90°											
50 Hz	230 VΔ/400 VY		4	180 M ... 315 L	1PC1301-1E ... -3A	**Standard**	**2**	**2**			–
50 Hz	400 VΔ/690 VY		4	180 M ... 315 L	1PC1301-1E ... -3A	**Standard**	**3**	**4**			–
50 Hz	500 VY		4	180 M ... 315 L	1PC1301-1E ... -3A	Without add. charge	**2**	**7**			–
50 Hz	500 VΔ		4	180 M ... 315 L	1PC1301-1E ... -3A	Without add. charge	**4**	**0**			–
Further voltages [1]		For price information, code numbers, order codes and descriptions, see Page 5/16					**9**	**0**			. . .
Types of construction			No. of poles	Frame size	Motor type	Version					Order code(s)
Without flange	IM B3 [2]		4	180 M ... 315 L	1PC1301-1E ... -3A	**Standard**			**A**		–
With flange	IM B5 [2]		4	180 M ... 315 M	1PC1301-1E ... -3A	With additional charge			**F**		–
Further types of construction		For price information, code letters and descriptions, see Page 5/19							**■**		. . .
Motor protection			No. of poles	Frame size	Motor type	Version					Order code(s)
Cover plate rotatable 4 x 90°											
Without			4	180 M ... 315 L	1PC1301-1E ... -3A	**Standard**				**A**	–
PTC thermistor with 3 temperature sensors			4	180 M ... 315 L	1PC1301-1E ... -3A	With additional charge				**B**	–
Further motor protection		For price information, code letters and descriptions, see Page 5/20								**■**	. . .
Terminal box position			No. of poles	Frame size	Motor type	Version					Order code(s)
Terminal box at top			4	180 M ... 315 L	1PC1301-1A ... -3A	**Standard**					**4** –
Further terminal box positions		For price information, code numbers and descriptions, see Page 5/21									
Special versions			No. of poles	Frame size	Motor type						Order code(s)
Forced-air cooled motors without ext. fan/fan cover (IC416)			4	180 L ... 315 L	1PC1301-1E ... -3A	**1PC1301-....■-■■■■-Z**					**F90** +. . .+. . .+. . .
Options		For price information, order codes and descriptions, see from Page 5/24				**1PC1301-....■-■■■■-Z**					. . .+. . .+. . .+. . .

[1] Operating values at rated output for 60 Hz are stored in the Drive Technology (DT) Configurator.

[2] Types derived from IM B3 (IM B6/7/8, IM V6 and IM V5) and from IM B5 (IM V3 and IM V1) are possible, provided that no requirement exists for stamping of the type on the rating plate. The basic type IM B3 or IM B5 is stamped as standard on the rating plate. If mounted in a different position, the position must be specified to ensure that the condensation drainage holes are positioned correctly.

© Siemens AG 2015

Selection and ordering data (continued)

P_{rated}, 50 Hz	P_{rated}, 60 Hz	Frame size	Operating values at rated output: n_{rated}, 50 Hz	T_{rated}, 50 Hz	IE class	η_{rated}, 50 Hz, 4/4	η_{rated}, 50 Hz, 3/4	η_{rated}, 50 Hz, 2/4	cos φ_{rated}, 50 Hz, 4/4	I_{rated}, 50 Hz, 400 V	T_{LR}/T_{rated}	I_{LR}/I_{rated}	T_B/T_{rated}	L_{pfA}, 50 Hz	L_{WA}, 50 Hz	**Cast-iron series 1PC1301** – *IE2 version according to IEC 60034-30* Article No.	$m_{IM\ B3}$	J	Torque class
kW	kW	FS	rpm	Nm		%	%	%		A				dB(A)	dB(A)		kg	kgm^2	CL
• Cooling: self-ventilated (IC411) or with order code F90 forced-air cooled without external fan and fan cover (IC416)																			
• Efficiency: IE2 High Efficiency, service factor (SF) 1.15																			
• Insulation: thermal class 180 (temperature class H), IP55 degree of protection, utilization in accordance with thermal class 130 (temperature class B)																			
6-pole: 1000 rpm at 50 Hz																			
15	**–**	**180 L**	975	147	IE2	89.7	90.1	90.2	0.78	31	2.5	6.0	3.1	56	70	**1PC1301-1EC4■-■■■■**	155	0.17	16
18.5	**–**	**200 L**	978	181	IE2	90.4	91.3	91.2	0.82	36	2.4	5.8	2.6	58	72	**1PC1301-2AC4■-■■■■**	200	0.25	16
22	**–**	**200 L**	978	215	IE2	90.9	91.6	91.2	0.82	42.5	2.5	6.2	2.6	58	72	**1PC1301-2AC5■-■■■■**	220	0.30	16
30	**–**	**225 M**	980	292	IE2	91.7	92.5	92.3	0.83	57	2.5	6.1	2.8	56	70	**1PC1301-2BC2■-■■■■**	285	0.58	16
37	**–**	**250 M**	982	360	IE2	92.2	93.1	93.1	0.83	70	2.8	6.0	2.5	57	71	**1PC1301-2CC2■-■■■■**	370	0.86	16
45	**–**	**280 S**	985	436	IE2	92.7	93.4	93.2	0.84	83	2.7	6.3	2.6	61	75	**1PC1301-2DC0■-■■■■**	460	1.1	16
55	**–**	**280 M**	985	533	IE2	93.1	93.9	94.0	0.86	99	2.5	6.4	2.6	61	75	**1PC1301-2DC2■-■■■■**	510	1.4	16
75	**–**	**315 S**	988	725	IE2	93.7	94.0	93.6	0.84	138	2.5	6.7	2.8	62	76	**1PC1301-3AC0■-■■■■**	660	2.1	16
90	**–**	**315 M**	988	870	IE2	94.0	94.3	93.6	0.84	165	2.6	6.9	2.8	64	78	**1PC1301-3AC2■-■■■■**	730	2.5	16
110	**–**	**315 L**	988	1063	IE2	94.3	94.6	94.5	0.86	196	2.7	7.0	2.8	62	76	**1PC1301-3AC4■-■■■■**	920	3.6	16
132	**–**	**315 L**	988	1276	IE2	94.6	94.9	94.7	0.86	235	3.0	7.5	2.9	64	78	**1PC1301-3AC5■-■■■■**	990	4.0	16
160	**–**	**315 L**	988	1546	IE2	94.8	94.7	94.4	0.86	285	3.1	7.7	3.3	65	80	**1PC1301-3AC6■-■■■■**	1160	4.7	16

Voltages		No. of poles	Frame size	Motor type	Version				Order code(s)
Cover plate rotatable 4 x 90°									
50 Hz	230 VΔ/400 VY	6	180 L ... 315 L	1PC1301-1E ... -3A	**Standard**	2	2		–
50 Hz	400 VΔ/690 VY	6	180 L ... 315 L	1PC1301-1E ... -3A	**Standard**	3	4		–
50 Hz	500 VY	6	180 L ... 315 L	1PC1301-1E ... -3A	Without add. charge	2	7		–
50 Hz	500 VΔ	6	180 L ... 315 L	1PC1301-1E ... -3A	Without add. charge	4	0		–
Further voltages [1]	For price information, code numbers, order codes and descriptions, see Page 5/16					9	0		. . .
Types of construction		No. of poles	Frame size	Motor type	Version				Order code(s)
Without flange	IM B3 [2]	6	180 L ... 315 L	1PC1301-1E ... -3A	**Standard**			A	–
With flange	IM B5 [2]	6	180 L ... 315 M	1PC1301-1E ... -3A	With additional charge			F	–
Further types of construction	For price information, code letters and descriptions, see Page 5/19							■	. . .
Motor protection		No. of poles	Frame size	Motor type	Version				Order code(s)
Cover plate rotatable 4 x 90°									
Without		6	180 L ... 315 L	1PC1301-1E ... -3A	**Standard**			A	–
PTC thermistor with 3 temperature sensors		6	180 L ... 315 L	1PC1301-1E ... -3A	With additional charge			B	–
Further motor protection	For price information, code letters and descriptions, see Page 5/20							■	. . .
Terminal box position		No. of poles	Frame size	Motor type	Version				Order code(s)
Terminal box at top		6	180 L ... 315 L	1PC1301-1E ... -3A	**Standard**			4	–
Further terminal box positions	For price information, code numbers and descriptions, see Page 5/21								
Special versions		No. of poles	Frame size	Motor type					Order code(s)
Forced-air cooled motors without ext. fan/fan cover (IC416)		6	180 L ... 315 L	1PC1301-1E ... -3A	**1PC1301-....■-■■■■-Z**				**F90** +. . .+. . .+. . .
Options	For price information, order codes and descriptions, see from Page 5/24				**1PC1301-....■-■■■■-Z**				. . .+. . .+. . .+. . .

[1] Operating values at rated output for 60 Hz are stored in the Drive Technology (DT) Configurator.

[2] Types derived from IM B3 (IM B6/7/8, IM V6 and IM V5) and from IM B5 (IM V3 and IM V1) are possible, provided that no requirement exists for stamping of the type on the rating plate. The basic type IM B3 or IM B5 is stamped as standard on the rating plate. If mounted in a different position, the position must be specified to ensure that the condensation drainage holes are positioned correctly.

© Siemens AG 2015

Selection and ordering data

P_{rated}, 50 Hz	P_{rated}, 60 Hz	Frame size	Operating values at rated output: n_{rated}, 50 Hz	T_{rated}, 50 Hz	IE class	η_{rated}, 50 Hz, 4/4	η_{rated}, 50 Hz, 3/4	η_{rated}, 50 Hz, 2/4	cos φ_{rated}, 50 Hz, 4/4	I_{rated}, 50 Hz, 400 V	T_{LR}/T_{rated}	I_{LR}/I_{rated}	T_B/T_{rated}	L_{pfA}, 50 Hz	L_{WA}, 50 Hz	**Aluminum series 1PC1303** – *IE3 version according to IEC 60034-30* Article No.	$m_{IM\ B3}$	J	Torque class
kW	**kW**	**FS**	rpm	Nm		%	%	%		A				dB(A)	dB(A)	▲ New	kg	kgm²	CL
• Cooling: self-ventilated (IC411) or with order code F90 forced-air cooled without external fan and fan cover (IC416)																			
• Efficiency: IE3 Premium Efficiency, service factor (SF) 1.15																			
• Insulation: thermal class 180 (temperature class H), IP55 degree of protection, utilization in accordance with thermal class 130 (temperature class B)																			
2-pole: 3000 rpm at 50 Hz																			
5.5	**–**	**132 S**	2950	18	IE3	89.2	89.2	88.2	0.90	9.9	1.8	7.4	3.6	68	80	▲ **1PC1303-1CA0■-■■■■**	43	0.024	16
7.5	**–**	**132 S**	2950	24	IE3	90.1	90.1	89.1	0.92	13.1	1.9	8.3	3.9	68	80	▲ **1PC1303-1CA1■-■■■■**	57	0.031	16
11	**–**	**160 M**	2955	36	IE3	91.2	91.2	90.2	0.89	19.6	2.4	7.9	3.8	70	82	▲ **1PC1303-1DA2■-■■■■**	75	0.053	16
15	**–**	**160 M**	2960	48	IE3	91.9	91.9	90.9	0.87	27.0	2.7	8.7	4.3	70	82	▲ **1PC1303-1DA3■-■■■■**	84	0.061	16
18.5	**–**	**160 L**	2955	60	IE3	92.4	92.4	91.4	0.90	32.0	2.8	9.0	4.2	70	82	▲ **1PC1303-1DA4■-■■■■**	94	0.068	16
4-pole: 1500 rpm at 50 Hz																			
5.5	**–**	**132 S**	1470	36	IE3	89.6	89.6	88.6	0.84	10.5	2.1	7.2	3.4	64	76	▲ **1PC1303-1CB0■-■■■■**	59	0.046	16
7.5	**–**	**132 M**	1470	49	IE3	90.4	90.4	89.4	0.84	14.3	2.4	7.4	3.5	64	76	▲ **1PC1303-1CB2■-■■■■**	64	0.046	16
11	**–**	**160 M**	1475	71	IE3	91.4	91.4	90.4	0.84	20.5	2.2	6.9	3.2	65	77	▲ **1PC1303-1DB2■-■■■■**	83	0.083	16
15	**–**	**160 L**	1475	97	IE3	92.1	92.1	91.1	0.82	28.5	2.5	8.5	3.8	65	77	▲ **1PC1303-1DB4■-■■■■**	100	0.099	16

Voltages		**Motor protection**	No. of poles	Frame size	Motor type	Version				Order code(s)
Frame sizes 132 S to 160 L: Cover plate rotatable 4 x 90°										
50 Hz	230 VΔ/400 VY	Any	2, 4	132 S ... 160 L	1PC1303-1C ... -1D	**Standard**	**2**	**2**		–
50 Hz	400 VΔ/690 VY	Any	2, 4	132 S ... 160 L	1PC1303-1C ... -1D	**Standard**	**3**	**4**		–
50 Hz	500 VY	Any	2, 4	132 S ... 160 L	1PC1303-1C ... -1D	Without add. charge	**2**	**7**		–
50 Hz	500 VΔ	Any	2, 4	132 S ... 160 L	1PC1303-1C ... -1D	Without add. charge	**4**	**0**		–
Further voltages [1]		For price information, code numbers, order codes and descriptions, see Page 5/16					**9**	**0**		. . .
Types of construction			No. of poles	Frame size	Motor type	Version				Order code(s)
Without flange	IM B3 [2]		2, 4	132 S ... 160 L	1PC1303-1C ... -1D	**Standard**			**A**	–
With flange	IM B5 [2]		2, 4	132 S ... 160 L	1PC1303-1C ... -1D	With additional charge			**F**	–
With standard flange	IM B14 [2]		2, 4	132 S ... 160 L	1PC1303-1C ... -1D	With additional charge			**K**	–
Further types of construction		For price information, code letters and descriptions, see from Page 5/17							■	. . .
Motor protection			No. of poles	Frame size	Motor type	Version				Order code(s)
Frame sizes 80 M to 160 L: Cover plate rotatable 4 x 90°										
Without			2, 4	132 S ... 160 L	1PC1303-1C ... -1D	**Standard**			**A**	–
PTC thermistor with 1 or 3 temperature sensors			2, 4	132 S ... 160 L	1PC1303-1C ... -1D	With additional charge			**B**	–
Further motor protection		For price information, code letters and descriptions, see Page 5/20							■	. . .
Terminal box position			No. of poles	Frame size	Motor type	Version				Order code(s)
Terminal box at top			2, 4	132 S ... 160 L	1PC1303-1C ... -1D	**Standard**				–
Further terminal box positions		For price information, code numbers and descriptions, see Page 5/21							**4**	
Special versions			No. of poles	Frame size	Motor type					Order code(s)
Forced-air cooled motors without ext. fan/fan cover (IC416)			2, 4	132 S ... 160 L	1PC1303-1C ... -1D	**1PC1303-. . . . ■-■■■■-Z**				**F90** +. . .+. . .+. . .
Options		For price information, order codes and descriptions, see from Page 5/22				**1PC1303-. . . . ■-■■■■-Z**				. . .+. . .+. . .+. . .

[1] Operating values at rated output for 60 Hz (4 and 6-pole) are stored in the Drive Technology (DT) Configurator.

[2] Types derived from IM B3 (IM B6/7/8, IM V6 and IM V5), from IM B5 (IM V3 and IM V1) and from IM B14 (IM V19 and IM V18) are possible, provided that no requirements exist for condensation drainage holes (**H03**) and stamping of the type on the rating plate. The basic type IM B3, IM B5 or IM B14 is stamped as standard on the rating plate. When ordering with condensation drainage holes (**H03**), the type must be specified.

© Siemens AG 2015

Selection and ordering data (continued)

P_{rated}, 50 Hz	P_{rated}, 60 Hz	Frame size	Operating values at rated output: n_{rated}, 50 Hz	T_{rated}, 50 Hz	IE class	η_{rated}, 50 Hz, 4/4	η_{rated}, 50 Hz, 3/4	η_{rated}, 50 Hz, 2/4	cos φ_{rated}, 50 Hz, 4/4	I_{rated}, 50 Hz, 400 V	T_{LR}/T_{rated}	I_{LR}/I_{rated}	T_B/T_{rated}	L_{pfA}, 50 Hz	L_{WA}, 50 Hz	Cast-iron series 1PC1304 – IE3 version according to IEC 60034-30 Article No.	$m_{IM\ B3}$	J	Torque class
kW	kW	FS	rpm	Nm		%	%	%		A				dB(A)	dB(A)	▲ New	kg	kgm²	CL
• Cooling: self-ventilated (IC411) or with order code F90 forced-air cooled without external fan and fan cover (IC416) • Efficiency: IE3 Premium Efficiency, service factor (SF) 1.15 • Insulation: thermal class 180 (temperature class H), IP55 degree of protection, utilization in accordance with thermal class 130 (temperature class B)																			
2-pole: 3000 rpm at 50 Hz																			
22	**–**	**180 M**	2950	71	IE3	92.7	92.7	91.2	0.89	38.5	2.3	7.5	3.5	73	80	▲ **1PC1304-1EA2■-■■■■**	169	0.08	16
30	**–**	**200 L**	2955	97	IE3	93.3	93.3	91.8	0.87	53	2.5	7.0	3.3	73	80	▲ **1PC1304-2AA4■-■■■■**	222	0.13	16
37	**–**	**200 L**	2955	120	IE3	93.7	93.7	92.2	0.88	65	2.5	7.1	3.2	74	81	▲ **1PC1304-2AA5■-■■■■**	245	0.16	16
45	**–**	**225 M**	2960	145	IE3	94.0	94.5	94.4	0.89	78	2.4	6.9	3.3	73	87	▲ **1PC1304-2BA2■-■■■■**	315	0.26	16
55	**–**	**250 M**	2975	177	IE3	94.3	94.5	93.9	0.89	95	2.3	6.7	3.1	73	87	▲ **1PC1304-2CA2■-■■■■**	385	0.46	13
75	**–**	**280 S**	2975	241	IE3	94.7	94.8	94.1	0.89	128	2.4	6.8	3.0	74	88	▲ **1PC1304-2DA0■-■■■■**	510	0.77	13
90	**–**	**280 M**	2975	289	IE3	95.0	95.1	94.6	0.90	152	2.4	7.2	3.1	74	88	▲ **1PC1304-2DA2■-■■■■**	590	0.94	13
110	**–**	**315 S**	2982	352	IE3	95.2	95.4	94.9	0.91	183	2.4	7.1	3.1	75	89	▲ **1PC1304-3AA0■-■■■■**	750	1.4	13
132	**–**	**315 M**	2982	423	IE3	95.4	95.5	95.2	0.91	220	2.5	7.2	3.1	75	89	▲ **1PC1304-3AA2■-■■■■**	880	1.6	13
160	**–**	**315 L**	2982	512	IE3	95.6	95.7	95.2	0.92	265	2.8	7.8	3.3	77	91	▲ **1PC1304-3AA4■-■■■■**	980	1.9	13
200	**–**	**315 L**	2982	640	IE3	95.8	95.9	95.5	0.92	330	2.5	7.2	3.0	77	91	▲ **1PC1304-3AA5■-■■■■**	1150	2.3	13

Voltages			No. of poles	Frame size	Motor type	Version				Order code(s)
Cover plate rotatable 4 x 90°										
50 Hz	230 VΔ/400 VY		2	180 M ... 315 L	1PC1304-1E ... -3A	**Standard**	**2**	**2**		–
50 Hz	400 VΔ/690 VY		2	180 M ... 315 L	1PC1304-1E ... -3A	**Standard**	**3**	**4**		–
50 Hz	500 VY		2	180 M ... 315 L	1PC1304-1E ... -3A	Without add. charge	**2**	**7**		–
50 Hz	500 VΔ		2	180 M ... 315 L	1PC1304-1E ... -3A	Without add. charge	**4**	**0**		–
Further voltages		For price information, code numbers, order codes and descriptions, see Page 5/16					**9**	**0**		. . .
Types of construction			No. of poles	Frame size	Motor type	Version				Order code(s)
Without flange	IM B3 [1]		2	180 M ... 315 L	1PC1304-1E ... -3A	**Standard**			**A**	–
With flange	IM B5 [1]		2	180 M ... 315 L	1PC1304-1E ... -3A	With additional charge			**F**	–
Further types of construction		For price information, code letters and descriptions, see Page 5/19							■	. . .
Motor protection			No. of poles	Frame size	Motor type	Version				Order code(s)
Cover plate rotatable 4 x 90°										
Without			2	180 M ... 315 L	1PC1304-1E ... -3A	**Standard**			**A**	–
PTC thermistor with 1 or 3 temperature sensors			2	180 M ... 315 L	1PC1304-1E ... -3A	With additional charge			**B**	–
Further motor protection		For price information, code letters and descriptions, see Page 5/20							■	. . .
Terminal box position			No. of poles	Frame size	Motor type	Version				Order code(s)
Terminal box at top			2	180 M ... 315 L	1PC1304-1E ... -3A	**Standard**			**4**	–
Further terminal box positions		For price information, code numbers and descriptions, see Page 5/21								
Special versions			No. of poles	Frame size	Motor type					Order code(s)
Forced-air cooled motors without ext. fan/fan cover (IC416)			2	180 M ... 315 L	1PC1304-1E ... -3A	**1PC1304- . . . . ■-■■■■ -Z**				**F90** + . . .+. . .+. . .
Options		For price information, order codes and descriptions, see from Page 5/24				**1PC1304- . . . . ■-■■■■ -Z**				. . .+. . .+. . .+. . .

[1] Types derived from IM B3 (IM B6/7/8, IM V6 and IM V5) and from IM B5 (IM V3 and IM V1) are possible, provided that no requirement exists for stamping of the type on the rating plate. The basic type IM B3 or IM B5 is stamped as standard on the rating plate. If mounted in a different position, the position must be specified to ensure that the condensation drainage holes are positioned correctly.

© Siemens AG 2015

Selection and ordering data (continued)

P_{rated}, 50 Hz	P_{rated}, 60 Hz	Frame size	Operating values at rated output: n_{rated}, 50 Hz	T_{rated}, 50 Hz	IE class	η_{rated}, 50 Hz, 4/4	η_{rated}, 50 Hz, 3/4	η_{rated}, 50 Hz, 2/4	cos φ_{rated}, 50 Hz, 4/4	I_{rated}, 50 Hz, 400 V	T_{LR}/T_{rated}	I_{LR}/I_{rated}	T_B/T_{rated}	L_{pfA}, 50 Hz	L_{WA}, 50 Hz	**Cast-iron series 1PC1304** – *IE3 version according to IEC 60034-30* Article No.	$m_{IM\ B3}$	J	Torque class
kW	**kW**	**FS**	rpm	Nm		%	%	%		A				dB(A)	dB(A)	▲ New	kg	kgm²	CL
• Cooling: self-ventilated (IC411) or with order code F90 forced-air cooled without external fan and fan cover (IC416)																			
• Efficiency: IE3 Premium Efficiency, service factor (SF) 1.15																			
• Insulation: thermal class 180 (temperature class H), IP55 degree of protection, utilization in accordance with thermal class 130 (temperature class B)																			
4-pole: 1500 rpm at 50 Hz																			
18.5	**–**	**180 M**	1470	120	IE3	92.6	92.6	91.1	0.82	35.0	2.5	7.2	3.3	66	73	▲ **1PC1304-1EB2■-■■■■**	170	0.13	16
22	**–**	**180 L**	1470	143	IE3	93.0	93.0	91.5	0.83	41.0	2.3	6.8	3.3	68	75	▲ **1PC1304-1EB4■-■■■■**	180	0.14	16
30	**–**	**200 L**	1470	195	IE3	93.6	93.6	92.1	0.84	55	2.6	7.3	3.1	65	72	▲ **1PC1304-2AB5■-■■■■**	240	0.22	16
37	**–**	**225 S**	1478	239	IE3	93.9	94.5	94.4	0.86	66	2.5	6.4	2.7	65	78	▲ **1PC1304-2BB0■-■■■■**	285	0.42	16
45	**–**	**225 M**	1478	291	IE3	94.2	94.9	95.1	0.86	80	2.6	6.4	2.7	65	78	▲ **1PC1304-2BB2■-■■■■**	320	0.47	16
55	**–**	**250 M**	1482	354	IE3	94.6	95.1	95.0	0.87	96	2.5	6.8	2.9	66	79	▲ **1PC1304-2CB2■-■■■■**	420	0.85	16
75	**–**	**280 S**	1485	482	IE3	95.0	95.3	95.0	0.86	133	2.5	6.9	3.0	69	83	▲ **1PC1304-2DB0■-■■■■**	570	1.4	16
90	**–**	**280 M**	1485	579	IE3	95.2	95.5	95.3	0.87	157	2.6	7.2	3.0	70	84	▲ **1PC1304-2DB2■-■■■■**	670	1.7	16
110	**–**	**315 S**	1488	706	IE3	95.4	95.8	95.5	0.87	191	2.6	6.8	2.9	70	84	▲ **1PC1304-3AB0■-■■■■**	760	2.2	16
132	**–**	**315 M**	1490	846	IE3	95.6	95.9	95.9	0.87	230	2.8	7.3	3.0	73	87	▲ **1PC1304-3AB2■-■■■■**	960	2.9	16
160	**–**	**315 L**	1490	1025	IE3	95.8	96.1	96.1	0.87	275	2.9	7.3	3.1	73	87	▲ **1PC1304-3AB4■-■■■■**	990	3.1	16
200	**–**	**315 L**	1488	1284	IE3	96.0	96.3	96.1	0.88	340	3.2	7.4	3.0	73	87	▲ **1PC1304-3AB5■-■■■■**	1190	3.7	16

Voltages			No. of poles	Frame size	Motor type	Version				Order code(s)
Cover plate rotatable 4 x 90°										
50 Hz	230 VΔ/400 VY		4	180 M ... 315 L	1PC1304-1E ... -3A	**Standard**	**2**	**2**		–
50 Hz	400 VΔ/690 VY		4	180 M ... 315 L	1PC1304-1E ... -3A	**Standard**	**3**	**4**		–
50 Hz	500 VY		4	180 M ... 315 L	1PC1304-1E ... -3A	Without add. charge	**2**	**7**		–
50 Hz	500 VΔ		4	180 M ... 315 L	1PC1304-1E ... -3A	Without add. charge	**4**	**0**		–
Further voltages [1]		For price information, code numbers, order codes and descriptions, see Page 5/16					**9**	**0**		. . .
Types of construction			No. of poles	Frame size	Motor type	Version				Order code(s)
Without flange	IM B3 [2]		4	180 M ... 315 L	1PC1304-1E ... -3A	**Standard**			**A**	–
With flange	IM B5 [2]		4	180 M ... 315 M	1PC1304-1E ... -3A	With additional charge			**F**	–
Further types of construction		For price information, code letters and descriptions, see Page 5/19							■	. . .
Motor protection			No. of poles	Frame size	Motor type	Version				Order code(s)
Cover plate rotatable 4 x 90°										
Without			4	180 M ... 315 L	1PC1304-1E ... -3A	**Standard**			**A**	–
PTC thermistor with 3 temperature sensors			4	180 M ... 315 L	1PC1304-1E ... -3A	With additional charge			**B**	–
Further motor protection		For price information, code letters and descriptions, see Page 5/20							■	. . .
Terminal box position			No. of poles	Frame size	Motor type	Version				Order code(s)
Terminal box at top			4	180 M ... 315 L	1PC1304-1E ... -3A	**Standard**			**4**	–
Further terminal box positions		For price information, code numbers and descriptions, see Page 5/21								
Special versions			No. of poles	Frame size	Motor type					Order code(s)
Forced-air cooled motors without ext. fan/fan cover (IC416)			4	180 M ... 315 L	1PC1304-1E ... -3A	**1PC1304-. . . . ■-■■■■**			**-Z**	**F90** +. . .+. . .+. . .
Options		For price information, order codes and descriptions, see from Page 5/24				**1PC1304-. . . . ■-■■■■**			**-Z**	. . .+. . .+. . .+. . .

[1] Operating values at rated output for 60 Hz are stored in the Drive Technology (DT) Configurator.

[2] Types derived from IM B3 (IM B6/7/8, IM V6 and IM V5) and from IM B5 (IM V3 and IM V1) are possible, provided that no requirement exists for stamping of the type on the rating plate. The basic type IM B3 or IM B5 is stamped as standard on the rating plate. If mounted in a different position, the position must be specified to ensure that the condensation drainage holes are positioned correctly.

© Siemens AG 2015

Supplements to article numbers and special versions · Voltages · Aluminum series 1PC1300, 1PC1303

Selection and ordering data

Voltages	Voltage code 12th and 13th position of the Article No.		Additional identification code with order code and plain text if required	Motor category							
				Motor version	**Motor type (alum.)**	**Motor type – Frame size**					
						80	**90**	**100**	**112**	**132**	**160**
				IE2 High Efficiency	1PC1300	**1PC1300**					
				IE3 Premium Efficiency	1PC1303					**1PC1303**	
1PC1300 - . . . . ■ - ■ . . .				Motor version	Motor type	Frame size					
1PC1303 - . . . . ■ - ■ . . .			Order code			80	90	100	112	132	160
Voltage at 50 Hz or 60 Hz											
50 Hz 230 VΔ/400 VY	2	2	–	All	All	□	□	□	□	□	□
50 Hz 400 VΔ/690 VY	3	4	–	All	All	□	□	□	□	□	□
50 Hz 500 VY	2	7	–	All	All	○	○	○	○	○	○
50 Hz 500 VΔ	4	0	–	All	All	–	–	○	○	○	○
Non-standard voltage and/or frequencies											
Non-standard winding [1]	9	0	**M1Y** • and customer specifications	All	All	O. R.	O. R.	O. R.	O. R.	O. R.	O. R.

□ Standard version
○ Without additional charge
• This order code only determines the price of the version – Additional plain text is required.
O. R. Possible on request
– Not possible

Supplements to article numbers and special versions · Voltages · Cast-iron series 1PC1301, 1PC1304

Selection and ordering data

Voltages	Voltage code 12th and 13th position of the Article No.		Additional identification code with order code and plain text if required	Motor category							
				Motor version	**Motor type (cast-iron)**	**Motor type – Frame size**					
						180	**200**	**225**	**250**	**280**	**315**
				IE2 High Efficiency	1PC1301	**1PC1301**					
				IE3 Premium Efficiency	1PC1304	**1PC1304**					
1PC1301 - . . . . ■ - ■ . . .				Motor version	Motor type	Frame size					
1PC1304 - . . . . ■ - ■ . . .			Order code			180	200	225	250	280	315
Voltage at 50 Hz or 60 Hz											
50 Hz 230 VΔ/400 VY	2	2	–	All	All	□	□	□	□	□	□
50 Hz 400 VΔ/690 VY	3	4	–	All	All	□	□	□	□	□	□
50 Hz 500 VY	2	7	–	All	All	○	○	○	○	○	○
50 Hz 500 VΔ	4	0	–	All	All	○	○	○	○	○	○
Non-standard voltage and/or frequencies											
Non-standard winding [1]	9	0	**M1Y** • and customer specifications	All	All	O. R.	O. R.	O. R.	O. R.	O. R.	O. R.

□ Standard version
○ Without additional charge
• This order code only determines the price of the version – Additional plain text is required.
O. R. Possible on request

[1] Special voltages or 60 Hz on request.

© Siemens AG 2015

Selection and ordering data

Types of construction		Type of construc. letter 14th position of the Article No.	Additional identification code with order code and plain text if required	Motor category							
				Motor version	**Motor type (alum.)**	**Motor type – Frame size**					
						80	**90**	**100**	**112**	**132**	**160**
				IE2 High Efficiency	1PC1300	**1PC1300**					
				IE3 Premium Efficiency	1PC1303					**1PC1303**	
1PC1300 - . . . . . - . ■ . . **1PC1303 - . . . . . - . ■ . .**			Order code	Motor version	Motor type	Frame size 80	90	100	112	132	160
Without flange											
IM B3	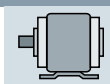	A	–	All	All	□	□	□	□	□	□
IM B6	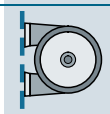	T	–	All	All	□	□	□	□	□	□
IM B7	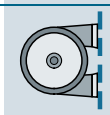	U	–	All	All	□	□	□	□	□	□
IM B8		V	–	All	All	□	□	□	□	□	□
IM V6	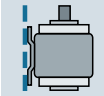	D	–	All	All	□	□	□	□	□	□
IM V5 without protective cover	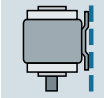	C	–	All	All	□	□	□	□	□	□
IM B30	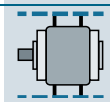	Z	**P3A**	All	All	O. R.	O. R.	O. R.	O. R.	O. R.	O. R.
IM V30	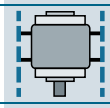	Z	**P3C**	All	All	O. R.	O. R.	O. R.	O. R.	O. R.	O. R.
IM V31	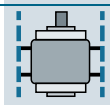	Z	**P3D**	All	All	O. R.	O. R.	O. R.	O. R.	O. R.	O. R.

For legend, see Page 5/18.

© Siemens AG 2015

Supplements to article numbers and special versions · Types of construction · Aluminum series 1PC1300, 1PC1303

Types of construction		Type of construc. letter 14th position of the Article No.	Additional identification code with order code and plain text if required	Motor category							
				Motor version	**Motor type (alum.)**	**Motor type – Frame size**					
						80	**90**	**100**	**112**	**132**	**160**
				IE2 High Efficiency	1PC1300	**1PC1300**					
				IE3 Premium Efficiency	1PC1303					**1PC1303**	
1PC1300 - . . . . . - . ■ . .				Motor version	Motor type	Frame size					
1PC1303 - . . . . . - . ■ . .			Order code			80	90	100	112	132	160
With flange		**acc. to EN 50347 acc. to DIN 42 948**				**FF165 A 200**	**FF165 A 200**	**FF215 A 250**	**FT215 A 250**	**FF265 A 300**	**FF300 A 350**
IM B5	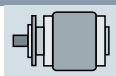	**F**	–	All	All	✓	✓	✓	✓	✓	✓
IM V1 without canopy		**G**	–	All	All	✓	✓	✓	✓	✓	✓
IM V3		**H**	–	All	All	✓	✓	✓	✓	✓	✓
IM B35	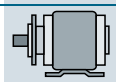	**J**	–	All	All	✓	✓	✓	✓	✓	✓
With standard flange		**acc. to EN 50347 acc. to DIN 42 948**				**FT100 C 120**	**FT115 C 140**	**FT130 C 160**	**FT130 C 160**	**FT165 C 200**	**FT165 C 200**
IM B14	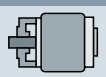	**K**	–	All	All	✓	✓	✓	✓	✓	✓
IM V19	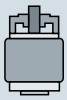	**L**	–	All	All	✓	✓	✓	✓	✓	✓
IM V18 without canopy	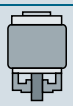	**M**	–	All	All	✓	✓	✓	✓	✓	✓
IM B34	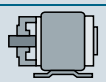	**N**	–	All	All	✓	✓	✓	✓	✓	✓

□ Standard version
✓ With additional charge
O. R. Possible on request

5

© Siemens AG 2015

Selection and ordering data

Types of construction		Type of construction letter 14th position of the Article No.	Additional identification code with order code and plain text if required	Motor category									
				Motor version	**Motor type (cast-iron)**	**Motor type – frame size**							
						180	**200**	**225**	**250**	**280**	**315 S/M**	**315 L 2-pole**	**315 L 4-pole, 6-pole**
				IE2 High Efficiency	1PC1301	**1PC1301**							
				IE3 Premium Efficiency	1PC1304	**1PC1304**							
				Motor version	Motor type	Frame size							
						180	200	225	250	280	315 S/M	315 L 2-pole	315 L 4-pole, 6-pole
1PC1301 - . . . . . - . ■ . . **1PC1304 - . . . . . - . ■ . .**			Order code										
Without flange													
IM B3	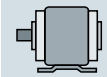	**A**	–	All	All	□	□	□	□	□	□	□	□
IM B6	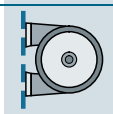	**T**	–	All	All	□	□	□	□	□	□	□	□
IM B7	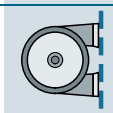	**U**	–	All	All	□	□	□	□	□	□	□	□
IM B8	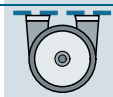	**V**	–	All	All	□	□	□	□	□	□	□	□
IM V6	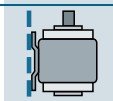	**D**	–	All	All	□	□	□	□	□	□	✓	□
IM V5 without protective cover	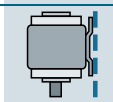	**C**	–	All	All	□	□	□	□	□	□	✓	□
IM B30	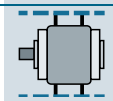	**Z**	**P3A**	All	All	O. R.	O. R.	O. R.	O. R.	O. R.	O. R.	O. R.	O. R.
IM V30	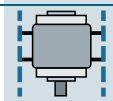	**Z**	**P3C**	All	All	O. R.	O. R.	O. R.	O. R.	O. R.	O. R.	O. R.	O. R.
IM V31	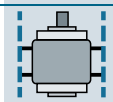	**Z**	**P3D**	All	All	O. R.	O. R.	O. R.	O. R.	O. R.	O. R.	O. R.	O. R.
With flange		**acc. to EN 50347 acc. to DIN 42 948**				**FF300 A 350**	**FF350 A 400**	**FF400 A 450**	**FF500 A 550**	**FF500 A 550**	**FF600 A 660**	**FF600 A 660**	**FF600 A 660**
IM B5	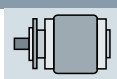	**F**	–	All	All	✓	✓	✓	✓	✓	✓	–	–
IM V1 without canopy	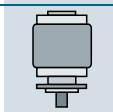	**G**	–	All	All	✓	✓	✓	✓	✓	✓	✓	✓
IM V3		**H**	–	All	All	✓	✓	✓	✓	✓	✓	–	–
IM B35	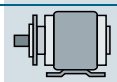	**J**	–	All	All	✓	✓	✓	✓	✓	✓	✓	✓

□ Standard version
✓ With additional charge
– Not possible
O. R. Possible on request

© Siemens AG 2015

Supplements to article numbers and special versions · Motor protection · Aluminum series 1PC1300, 1PC1303

Selection and ordering data

Motor protection	Motor protection letter 15th position of the Article No.	Additional identification code with order code and plain text if required	Motor category **Motor version**	**Motor type (alum.)**	**Motor type – Frame size** **80**	**90**	**100**	**112**	**132**	**160**
			IE2 High Efficiency	1PC1300	**1PC1300**					
			IE3 Premium Efficiency	1PC1303					**1PC1303**	
1PC1300 - . . . . . - . . ■ . **1PC1303 - . . . . . - . . ■ .**		Order code	Motor version	Motor type	Frame size 80	90	100	112	132	160
Motor protection (winding protection)										
Without motor protection	**A**	–	All	All	□	□	□	□	□	□
Motor protection with PTC thermistor with 3 embedded temperature sensors for tripping	**B**	–	All	All	✓	✓	✓	✓	✓	✓
Motor protection with PTC thermistor with 6 embedded temperature sensors for tripping and alarm	**C**	–	All	All	✓	✓	✓	✓	✓	✓
Motor temperature detection with embedded temperature sensor KTY 84-130	**F**	–	All	All	✓	✓	✓	✓	✓	✓

□ Standard version
✓ With additional charge

Supplements to article numbers and special versions · Motor protection · Cast-iron series 1PC1301, 1PC1304

Selection and ordering data

Motor protection	Motor protection letter 15th position of the Article No.	Additional identification code with order code and plain text if required	Motor category **Motor version**	**Motor type (cast-iron)**	**Motor type – Frame size** **180**	**200**	**225**	**250**	**280**	**315**
			IE2 High Efficiency	1PC1301	**1PC1301**					
			IE3 Premium Efficiency	1PC1304	**1PC1304**					
1PC1301 - . . . . . - . . ■ . **1PC1304 - . . . . . - . . ■ .**		Order code	Motor version	Motor type	Frame size 180	200	225	250	280	315
Motor protection (winding protection)										
Without motor protection	**A**	–	All	All	□	□	□	□	□	□
Motor protection with PTC thermistor with 3 embedded temperature sensors for tripping	**B**	–	All	All	✓	✓	✓	✓	✓	✓
Motor protection with PTC thermistor with 6 embedded temperature sensors for tripping and alarm	**C**	–	All	All	✓	✓	✓	✓	✓	✓
Motor temperature detection with embedded temperature sensor KTY 84-130	**F**	–	All	All	✓	✓	✓	✓	✓	✓

□ Standard version
✓ With additional charge

© Siemens AG 2015

Supplements to article numbers and special versions · Terminal box position · Aluminum series 1PC1300, 1PC1303

Selection and ordering data

Terminal box position	Terminal box position identification code 16th position of the Article No.	Additional identification code with order code and plain text if required	Motor category							
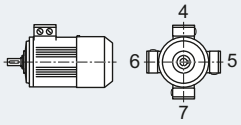			**Motor version**	**Motor type (alum.)**	**Motor type – Frame size**					
					80	**90**	**100**	**112**	**132**	**160**
			IE2 High Efficiency	1PC1300	**1PC1300**					
			IE3 Premium Efficiency	1PC1303					**1PC1303**	
1PC1300 - . . . . . - . . . ■			Motor version	Motor type	Frame size					
1PC1303 - . . . . . - . . . ■		Order code			80	90	100	112	132	160
Terminal box position [1]										
Terminal box at top	4	–	All	All	□	□	□	□	□	□
Terminal box on RHS	5	–	All	All	✓	✓	✓	✓	✓	✓
Terminal box on LHS	6	–	All	All	✓	✓	✓	✓	✓	✓
Terminal box at bottom [2]	7	–	All	All	–	–	✓	✓	✓	✓

□ Standard version
✓ With additional charge
– Not possible

Supplements to article numbers and special versions · Terminal box position · Cast-iron series 1PC1301, 1PC1304

Selection and ordering data

Terminal box position	Terminal box position identification code 16th position of the Article No.	Additional identification code with order code and plain text if required	Motor category							
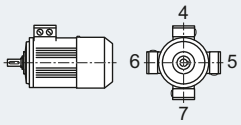			**Motor version**	**Motor type (cast-iron)**	**Motor type – Frame size**					
					180	**200**	**225**	**250**	**280**	**315**
			IE2 High Efficiency	1PC1301	**1PC1301**					
			IE3 Premium Efficiency	1PC1304	**1PC1304**					
1PC1301 - . . . . . - . . . ■			Motor version	Motor type	Frame size					
1PC1304 - . . . . . - . . . ■		Order code			180	200	225	250	280	315
Terminal box position [1]										
Terminal box at top	4	–	All	All	□	□	□	□	□	□
Terminal box on RHS	5	–	All	All	✓	✓	✓	✓	✓	✓
Terminal box on LHS	6	–	All	All	✓	✓	✓	✓	✓	✓
Terminal box at bottom [2]	7	–	All	All	O. R.	O. R.	O. R.	O. R.	O. R.	O. R.

□ Standard version
✓ With additional charge
O. R. Possible on request

[1] This refers to the position of the terminal box base on the housing.
[2] For motors without feet.

© Siemens AG 2015

Selection and ordering data

Special versions	Additional identification code **-Z** with order code and plain text if required	Motor category							
		Motor version	**Motor type (alum.)**	**Motor type – Frame size**					
				80	**90**	**100**	**112**	**132**	**160**
		IE2 High Efficiency	1PC1300	**1PC1300**					
		IE3 Premium Efficiency	1PC1303					**1PC1303**	
1PC1300 - . . . . . - . . . . -Z		Motor version	Motor type	Frame size					
1PC1303 - . . . . . - . . . . -Z	Order code			80	90	100	112	132	160
Motor protection (bearing protection)									
Measuring nipple for SPM shock pulse measurement for bearing inspection	**Q01**	All	All	–	–	✓	✓	✓	✓
Prepared for mounting a SIPLUS CMS 1000 vibration sensor	**Q05**	All	All	–	–	✓	✓	✓	✓
Motor connection and terminal box									
External grounding	**H04**	All	All	✓	✓	✓	✓	✓	✓
Terminal box on NDE [1]	**H08**	All	All	✓	✓	✓	✓	✓	✓
Terminal box in position 180°; connection from right	**R12**	All	All	○	○	○	○	○	○
Terminal box in position 0°; connection from right	**R13**	All	All	○	○	○	○	○	○
One metal cable gland		All	All	◘	◘	◘	◘	◘	◘
Windings and insulation									
Increased air humidity/temperature with 30 to 60 g water per m^3 of air	**N20**	All	All	–	–	✓	✓	✓	✓
Colors and paint finish									
Standard finish in RAL 7030 stone gray		All	All	◘	◘	◘	◘	◘	◘
Unpainted (only cast-iron parts primed)	**S00**	All	All	○	○	○	○	○	○
Unpainted, only primed	**S01**	All	All	✓	✓	✓	✓	✓	✓
Special finish sea air resistant	**S03**	All	All	O. R.	O. R.	✓	✓	✓	✓
Top coat polyurethane [2]	**S06** *New!*	All	All	✓	✓	✓	✓	✓	✓
Finish in other standard RAL colors: RAL 1002, 1013, 1015, 1019, 2003, 2004, 3000, 3007, 5007, 5009, 5010, 5012, 5015, 5017, 5018, 5019, 6011, 6019, 6021, 7000, 7001, 7004, 7011, 7016, 7022, 7031, 7032, 7033, 7035, 9001, 9002, 9005 (see Catalog Section 1 "Introduction")	**Y53 •** and finish RAL …. *New!*	All	All	✓	✓	✓	✓	✓	✓
Finish in special RAL colors: For RAL colors, see "Special finish in special RAL colors" (see Catalog Section 1 "Introduction")	**Y56 •** and finish RAL …. *New!*	All	All	✓	✓	✓	✓	✓	✓
Mechanical design and degrees of protection									
Protective cover [3]	**H00**	All	All	✓	✓	✓	✓	✓	✓
Screwed-on (instead of cast) feet	**H01**	All	All	✓	✓	✓	✓	✓	✓
Condensation drainage holes		All	All	◘	◘	◘	◘	◘	◘
Rust-resistant screws (externally)	**H07**	All	All	–	–	✓	✓	✓	✓
IP65 degree of protection	**H20**	All	All	✓	✓	✓	✓	✓	✓
IP56 degree of protection	**H22**	All	All	✓	✓	✓	✓	✓	✓
Next larger standard flange	**P01**	All	All	–	–	O. R.	O. R.	O. R.	–
Coolant temperature and installation altitude									
Coolant temperature –30 to +40 °C	**D04**	All	All	✓	✓	✓	✓	✓	✓
Bearings and lubrication									
Bearing design for increased cantilever forces [8]	**L22**	All	All	–	–	–	–	✓	✓
Regreasing device	**L23**	All	All	–	–	✓	✓	✓	✓
Bearing insulation DE		All	All	O. R.	O. R.	O. R.	O. R.	O. R.	O. R.
Bearing insulation NDE		All	All	O. R.	O. R.	O. R.	O. R.	O. R.	O. R.
Balance and vibration quantity									
Vibration quantity level A		All	All	◘	◘	◘	◘	◘	◘
Vibration quantity level B	**L00**	All	All	✓	✓	✓	✓	✓	✓
Half-key balancing (standard)		All	All	◘	◘	◘	◘	◘	◘
Balancing without feather key, feather key is supplied	**L01**	All	All	✓	✓	✓	✓	✓	✓
Full-key balancing	**L02**	All	All	✓	✓	✓	✓	✓	✓

For legends and footnotes, see Page 5/23.

© Siemens AG 2015

Supplements to article numbers and special versions · Options · Aluminum series 1PC1300, 1PC1303

Special versions	Additional identification code **-Z** with order code and plain text if required	Motor category							
		Motor version	**Motor type (alum.)**	**Motor type – Frame size**					
				80	**90**	**100**	**112**	**132**	**160**
		IE2 High Efficiency	1PC1300	**1PC1300**					
		IE3 Premium Efficiency	1PC1303					**1PC1303**	
1PC1300 - . . . . . -Z **1PC1303 - . . . . . -Z**	Order code	Motor version	Motor type	Frame size 80	90	100	112	132	160
Shaft and rotor									
Shaft extension with standard dimensions, without feather keyway	**L04**	All	All	–	–	✓	✓	✓	✓
Standard cylindrical shaft extension	**L05**	All	All	✓	✓	✓	✓	✓	✓
Concentricity of shaft extension in accordance with DIN 42955 Tolerance R	**L07**	All	All	✓	✓	✓	✓	✓	✓
Concentricity of shaft extension, coaxiality and linear movement in accordance with DIN 42955 Tolerance R for flange-mounting motors	**L08**	All	All	✓	✓	✓	✓	✓	✓
Non-standard shaft extension, DE [4]	**Y58** • and customer specifications	All	All	✓	✓	✓	✓	✓	✓
Non-standard shaft extension, NDE [4]	**Y59** • and customer specifications	All	All	✓	✓	✓	✓	✓	✓
Special shaft steel		All	All	O. R.	O. R.	O. R.	O. R.	O. R.	O. R.
Heating and ventilation									
Without external fan and without fan cover	**F90**	All	All	○	○	○	○	○	○
Rating plate and extra rating plates									
Extra rating plate for voltage tolerance [5]	**B07**	All	All	✓	✓	✓	✓	✓	✓
Second rating plate, loose	**M10**	All	All	✓	✓	✓	✓	✓	✓
Extra rating plate or rating plate with deviating rating plate data	**Y80** • and customer specifications	All	All	✓	✓	✓	✓	✓	✓
Extra rating plate with identification codes	**Y82** • and customer specifications	All	All	✓	✓	✓	✓	✓	✓
Additional information on rating plate and on package label (max. 20 characters)	**Y84** • and customer specifications	All	All	✓	✓	✓	✓	✓	✓
Packaging, safety notes, documentation and test certificates									
Acceptance test certificate 3.1 according to EN 10204 [6]	**B02**	All	All	✓	✓	✓	✓	✓	✓
Printed German/English Operating Instructions enclosed [7]	**B04**	All	All	✓	✓	✓	✓	✓	✓
Standard test (routine test) with acceptance	**B65**	All	All	✓	✓	✓	✓	✓	✓
Type test with heat run for horizontal motors, with acceptance	**B83**	All	All	✓	✓	✓	✓	✓	✓

□ Standard version
○ Without additional charge
• This order code only determines the price of the version – Additional plain text is required.
✓ With additional charge
– Not possible
O. R. Possible on request

1) Important: Dimensions "C" and "CA" deviate from the EN 50347 standard. Note dimensions according to dimensions sheet generator!

2) Order code **S06** cannot be combined with order code **S00** and **S01**. It can be combined with **Y53** and **Y56** on request.

3) Order code **H00** provides mechanical protection.

4) When motors are ordered that have a longer or shorter shaft extension than normal, the required position and length of the feather keyway must be specified in a sketch. It must be ensured that only feather keys in accordance with DIN 6885, Form A are permitted to be used. Valid for non-standard shaft extensions DE or NDE. The feather keys are supplied in every case.
For order codes **Y58**, **Y59** and **L05**:
– Dimensions D and DA ≤ Inner diameter of roller bearing (see tables under "Dimensions")
– Dimensions E and EA ≤2 × length E (normal) of the shaft extension.
For an explanation of the order codes, see Catalog Section 1 "Introduction".

5) Can be ordered for 230 VΔ/400 VY or 400 VΔ/690 VY (voltage code "**22**" or "**34**").

6) The delivery time for the factory test certificate may differ from the delivery time for the motor.

7) The Operating Instructions (Compact) are available in PDF format for all official EU languages at http://support.automation.siemens.com/WW/view/en/10803948/133300.

8) A minimum cantilever force F_{min} of 0.5 · F_{max} is required for NU bearings (cylindrical roller bearings) in contrast to bearings. Cylindrical roller bearings are not suitable for coupling output or for brief periods of no-load operation without cantilever force.

© Siemens AG 2015

Selection and ordering data

Special versions	Additional identification code **-Z** with order code and plain text if required	Motor category							
		Motor version	**Motor type (cast-iron)**	**Motor type – Frame size**					
				180	**200**	**225**	**250**	**280**	**315**
		IE2 High Efficiency	1PC1301	**1PC1301**					
		IE3 Premium Efficiency	1PC1304	**1PC1304**					
1PC1301 - . . . . . - . . . . -Z		Motor version	Motor type	Frame size					
1PC1304 - . . . . . - . . . . -Z	Order code			180	200	225	250	280	315
Motor protection (bearing protection)									
Measuring nipple for SPM shock pulse measurement for bearing inspection	**Q01**	All	All	✓	✓	✓	✓	✓	✓
Prepared for mounting a SIPLUS CMS 1000 vibration sensor	**Q05**	All	All	✓	✓	✓	✓	✓	✓
Motor connection and terminal box									
External grounding		All	All	□	□	□	□	□	□
Terminal box on NDE [1]	**H08**	All	All	✓	✓	✓	✓	✓	✓
Terminal box in position 180°; connection from right	**R12**	All	All	○	○	○	○	○	○
Terminal box in position 0°; connection from right	**R13**	All	All	○	○	○	○	○	○
One metal cable gland		All	All	□	□	□	□	□	□
Windings and insulation									
Increased air humidity/temperature with 30 to 60 g water per m^3 of air	**N20**	All	All	✓	✓	✓	✓	✓	✓
Colors and paint finish									
Standard finish in RAL 7030 stone gray		All	All	□	□	□	□	□	□
Unpainted (only cast-iron parts primed)	**S00**	All	All	○	○	○	○	○	○
Unpainted, only primed	**S01**	All	All	✓	✓	✓	✓	✓	✓
Special finish	**S02** *New!*	All	All	✓	✓	✓	✓	✓	✓
Special finish sea air resistant	**S03**	All	All	✓	✓	✓	✓	✓	✓
Internal coating	**S05**	All	All	✓	✓	✓	✓	✓	✓
Top coat polyurethane [2]	**S06** *New!*	All	All	✓	✓	✓	✓	✓	✓
Finish in other standard RAL colors: RAL 1002, 1013, 1015, 1019, 2003, 2004, 3000, 3007, 5007, 5009, 5010, 5012, 5015, 5017, 5018, 5019, 6011, 6019, 6021, 7000, 7001, 7004, 7011, 7016, 7022, 7031, 7032, 7033, 7035, 9001, 9002, 9005 (see Catalog Section 1 "Introduction")	**Y53 •** and finish in RAL ….	All	All	✓	✓	✓	✓	✓	✓
Finish in special RAL colors: For RAL colors, see "Special finish in special RAL colors" (see Catalog Section 1 "Introduction")	**Y56 •** *New!* and finish RAL ….	All	All	✓	✓	✓	✓	✓	✓
Mechanical design and degrees of protection									
Screwed-on (instead of cast) feet	**H01**	All	All	✓	✓	✓	✓	✓	✓
Condensation drainage holes		All	All	□	□	□	□	□	□
Rust-resistant screws (externally)	**H07**	All	All	✓	✓	✓	✓	✓	✓
IP65 degree of protection	**H20**	All	All	✓	✓	✓	✓	✓	✓
IP56 degree of protection	**H22**	All	All	✓	✓	✓	✓	✓	✓
Coolant temperature and installation altitude									
Coolant temperature –30 to +40 °C	**D04**	All	All	✓	✓	✓	✓	✓	✓
Bearings and lubrication									
Regreasing device with M10X1 grease nipple according to DIN 71412-A	**L19**	All	All	✓	✓	✓	✓	○	○
Bearing design for increased cantilever forces [8]	**L22**	All	All	✓	✓	✓	✓	–	–
Regreasing device	**L23**	All	All	✓	✓	✓	✓	–	–
Bearing insulation DE		All	All	–	–	O. R.	O. R.	O. R.	O. R.
Bearing insulation NDE		All	All	–	–	O. R.	O. R.	O. R.	O. R.
Balance and vibration quantity									
Vibration quantity level A		All	All	□	□	□	□	□	□
Vibration quantity level B [3]	**L00**	All	All	✓	✓	✓	✓	✓	✓
Half-key balancing (standard)		All	All	□	□	□	□	□	□
Balancing without feather key, feather key is supplied	**L01**	All	All	✓	✓	✓	✓	✓	✓
Full-key balancing	**L02**	All	All	✓	✓	✓	✓	✓	✓

For legends and footnotes, see Page 5/25.

© Siemens AG 2015

Supplements to article numbers and special versions · Options · Cast-iron series 1PC1301, 1PC1304

Special versions	Additional identification code **-Z** with order code and plain text if required	Motor category							
		Motor version	**Motor type (cast-iron)**	**Motor type – Frame size**					
				180	**200**	**225**	**250**	**280**	**315**
		IE2 High Efficiency	1PC1301	**1PC1301**					
		IE3 Premium Efficiency	1PC1304	**1PC1304**					
1PC1301 - . . . . . - . . . . -Z		Motor version	Motor type	Frame size					
1PC1304 - . . . . . - . . . . -Z	Order code			180	200	225	250	280	315
Shaft and rotor									
Shaft extension with standard dimensions, without feather keyway	**L04**	All	All	✓	✓	✓	✓	✓	✓
Standard cylindrical shaft extension	**L05**	All	All	✓	✓	✓	✓	✓	✓
Concentricity of shaft extension in accordance with DIN 42955 Tolerance R	**L07**	All	All	✓	✓	✓	✓	✓	✓
Concentricity of shaft extension, coaxiality and linear movement in accordance with DIN 42955 Tolerance R for flange-mounting motors	**L08**	All	All	✓	✓	✓	✓	✓	✓
Non-standard cylindrical shaft extension, DE [4]	**Y58** • and customer specifications	All	All	✓	✓	✓	✓	✓	✓
Non-standard cylindrical shaft extension, NDE [4]	**Y59** • and customer specifications	All	All	✓	✓	✓	✓	✓	✓
Special shaft steel		All	All	O. R.	O. R.	O. R.	O. R.	O. R.	O. R.
Heating and ventilation									
Without external fan and without fan cover	**F90**	All	All	○	○	○	○	○	○
Rating plate and extra rating plates									
Extra rating plate for voltage tolerance [5]	**B07**	All	All	✓	✓	✓	✓	✓	✓
Second rating plate, loose	**M10** *New!*	All	All	✓	✓	✓	✓	✓	✓
Extra rating plate or rating plate with deviating rating plate data	**Y80** • and customer specifications	All	All	✓	✓	✓	✓	✓	✓
Extra rating plate with identification codes	**Y82** • and customer specifications	All	All	✓	✓	✓	✓	✓	✓
Additional information on rating plate and on package label (max. 20 characters)	**Y84** • and customer specifications	All	All	✓	✓	✓	✓	✓	✓
Packaging, safety notes, documentation and test certificates									
Acceptance test certificate 3.1 according to EN 10204 [6]	**B02**	All	All	✓	✓	✓	✓	✓	✓
Printed German/English Operating Instructions enclosed [7]	**B04**	All	All	✓	✓	✓	✓	✓	✓
Standard test (routine test) with acceptance	**B65**	All	All	✓	✓	✓	✓	✓	✓
Type test with heat run for horizontal motors, with acceptance	**B83**	All	All	✓	✓	✓	✓	✓	✓

- ◘ Standard version
- ○ Without additional charge
- • This order code only determines the price of the version – Additional plain text is required.
- ✓ With additional charge
- – Not possible
- O. R. Possible on request

1) Important: Dimensions "C" and "CA" deviate from the EN 50347 standard. Note dimensions according to dimensions sheet generator!

2) Order code **S06** cannot be combined with order code **S00**, **S01** and **S02**. It can be combined with **Y53** and **Y65** on request.

3) On request for 2-pole motors (concerns frame sizes 225 to 315).

4) When motors are ordered that have a longer or shorter shaft extension than normal, the required position and length of the feather keyway must be specified in a sketch. It must be ensured that only feather keys in accordance with DIN 6885, Form A are permitted to be used. The feather keyway is positioned centrally on the shaft extension. The length is defined by the manufacturer in accordance with the appropriate standard. Valid for non-standard shaft extensions DE or NDE. The feather keys are supplied in every case.
For order codes **Y58**, **Y59** and **L05**:
– Dimensions D and DA ≤ Inner diameter of roller bearing (see dimension tables under "Dimensions")
– Dimensions E and EA ≤2 x Length E (normal) of the shaft extension
For explanation of the order codes, see Catalog Section 1 "Introduction".

5) Can be ordered for 230 VΔ/400 VY or 400 VΔ/690 VY (voltage code "**22**" or "**34**").

6) The delivery time for the factory test certificate may differ from the delivery time for the motor.

7) The Operating Instructions (Compact) are available in PDF format for all official EU languages at http://support.automation.siemens.com/WW/view/en/10803948/133300.

8) A minimum cantilever force F_{min} of 0.5 · F_{max} is required for NU bearings (cylindrical roller bearings) in contrast to bearings. Cylindrical roller bearings are not suitable for coupling output or for brief periods of no-load operation without cantilever force.

© Siemens AG 2015

Overview

Couplings

The motor from Siemens is connected to the machine or gear unit through a coupling. Flender is an important coupling manufacturer with a wide range of products. For standard applications, Siemens recommends that elastic couplings of Flender types N-Eupex and Rupex or torsionally rigid couplings of types Arpex and Zapex are used. For special applications, Fludex and Elpex couplings are recommended.

Available from:
Siemens contact partner - ordering from catalog
Siemens MD 10.1 "FLENDER Standard Couplings"

or

A. Friedr. Flender AG
Kupplungswerk Mussum
Industriepark Bocholt, Germany
Schlavenhorst 100
46395 Bocholt, Germany
Tel. +49 (2871) 922185
Fax +49 (2871) 0922579

http://www.flender.com
E-mail: couplings@flender.com

Taper pins to DIN 258 with threaded ends and constant taper lengths

Taper pins are used for components that are repeatedly removed. The drilled hole is ground conically using a conical reamer until the pin can be pushed in by hand until the cone shoulder lies 3 to 4 mm above the rim of the hole.

It can then be driven in using a hammer until it is correctly seated. The pin is removed from the drilled hole by screwing on the nut and tightening it.

Standardized taper pins are available from general engineering suppliers.

Available from:

Otto Roth GmbH & Co. KG
Rutesheimer Strasse 22
70499 Stuttgart, Germany
Tel. +49 (711) 1388-0
Fax. +49 (711) 1388-233

http://www.ottoroth.de
E-mail: info@ottoroth.de

Foundation block acc. to DIN 799

The foundation blocks are inserted into the stone foundation and embedded in concrete. They are used for fixing machines of medium size, slide rails, pedestal bearings, baseframes, etc. After the fixing bolts have been unscrewed, the machine can be dragged without it having to be lifted.

When the machine is initially installed, the foundation block that is bolted to the machine (without washers) and fitted with taper pins is not embedded with concrete until the machine has been fully aligned. In this case, the machine is positioned 2 to 3 mm lower. The difference in shaft height is compensated by inserting shims on final installation. The taper pins safeguard the exact position of the machine when it is repeatedly removed and replaced without the need for realignment.

Available from:

Lütgert & Co. GmbH
Postfach 42 51
33276 Gütersloh, Germany
Tel. +49 (5241) 7407-0
Fax +49 (5241) 7407-90

http://www.luetgert-antriebe.de
E-mail: info@luetgert-antriebe.de

Slide rails with fixing bolts and tensioning screws according to DIN 42923

Slide rails are used to tension the belt of a machine easily and conveniently when a belt tightener is not available. They are fixed to the base using stone bolts or foundation blocks.

The assignment of slide rails to motor size can be found in DIN 42923. For motors of frame sizes 355 to 450, there are no standardized slide rails (please inquire).

Available from:

Lütgert & Co. GmbH
Postfach 42 51
33276 Gütersloh, Germany
Tel. +49 (5241) 7407-0
Fax +49 (5241) 7407-90

http://www.luetgert-antriebe.de
E-mail: info@luetgert-antriebe.de

© Siemens AG 2015

More information

Spare motors and repair parts

- Supply commitment for spare motors and repair parts following delivery of the motor
  - For up to 3 years, in the event of total motor failure, Siemens will supply a comparable motor with regard to the mounting dimensions and functions (the type series may vary).
  - Spare parts will be available for up to 5 years.
  - Within the time period of up to five years, Siemens will provide information about spare parts and will supply documents when required.
  - Replacement motors delivered after the active production of the machine series are also identified with "Spare motor" on the rating plate. Spare parts are offered only on request for these motors.
- When repair parts are ordered, the following details must be provided:
  - Designation and part number
  - Article No. and factory number of the motor
- For bearing types, see the "Introduction".
- For standard components, a supply commitment does not apply.
- Support – Hotline
  In Germany
  Tel.: +49 (180) 5050448

National telephone numbers can be found on the Internet page:
http://www.siemens.com/automation/service&support

© Siemens AG 2015

Overview

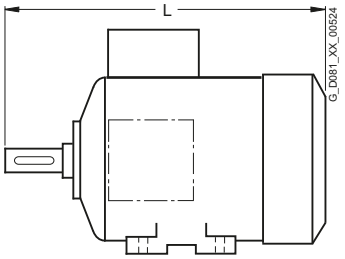

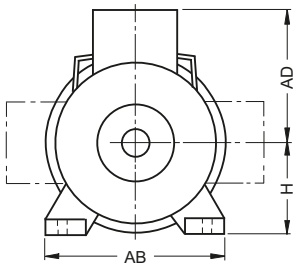

Frame size	Type	Dimensions L	AD	H	AB
80 M	Aluminum series, self-ventilated or forced-air cooled				
	1PC1300, 1PC1303	292	98.5	80	150
90 S/ 90 L	Aluminum series, self-ventilated or forced-air cooled				
	1PC1300, 1PC1303	347	103.5	90	165
100 L	Aluminum series, self-ventilated or forced-air cooled				
	1PC1300, 1PC1303	395.5	118	100	196
112 M	Aluminum series, self-ventilated or forced-air cooled				
	1PC1300, 1PC1303	389	129	112	226
132 S/ 132 M	Aluminum series, self-ventilated or forced-air cooled				
	1PC1300, 1PC1303	465[1)]	149	132	256
160 M/ 160 L	Aluminum series, self-ventilated or forced-air cooled				
	1PC1300, 1PC1303	604	175.5	160	300
180 M/ 180 L	Cast-iron series, forced-air cooled				
	1PC1301-, 1PC1304-				
	1EA2, 1EB2, 1EC4	668	244	180	339
	1EB4	698			
	Cast-iron series, self-ventilated				
	1PC1301-, 1PC1304-				
	1EA2, 1EB2, 1EC4	668	244	180	339
	1EB4	698			
200 L	Cast-iron series, forced-air cooled				
	1PC1301-, 1PC1304-				
	2AA4, 2AA5, 2AB5, 2AC4, 2AC5	721	307	200	378
	Cast-iron series, self-ventilated				
	1PC1301-, 1PC1304-				
	2AA4, 2AA5, 2AB5, 2AC4, 2AC5	617	307	200	378
225 S/ 225 M	Cast-iron series, forced-air cooled				
	1PC1301-, 1PC1304-				
	2BB0	788	328	225	436
	2BA2	818			
	2BB2, 2BC2	848			
250 M	Cast-iron series, forced-air cooled				
	1PC1301-, 1PC1304-				
	2CA2, 2CB2, 2CC2	887	375	250	490
	Cast-iron series, self-ventilated				
	1PC1301-, 1PC1304-				
	2CA2, 2CB2, 2CC2	764	375	250	490

Frame size	Type	Dimensions L	AD	H	AB
280 S/ 280 M	Cast-iron series, forced-air cooled				
	1PC1301-, 1PC1304-				
	2DA0, 2DB0, 2DC0, 2DA2, 2DB2, 2DC2	960	398	280	540
	Cast-iron series, self-ventilated				
	1PC1301-, 1PC1304-				
	2DA0, 2DB0, 2DC0, 2DA2, 2DB2, 2DC2	830	398	280	540
315 S	Cast-iron series, forced-air cooled				
	1PC1301-, 1PC1304-				
	3AA0	1052	455	315	610
	3AB0, 3AC0	1082			
	Cast-iron series, self-ventilated				
	1PC1301-, 1PC1304-				
	3AA0	905	455	315	610
	3AB0, 3AC0	935			
315 M	Cast-iron series, forced-air cooled				
	1PC1301-, 1PC1304-				
	3AA2	1217	455	315	610
	3AB2	1247			
	3AC2	1082			
	Cast-iron series, self-ventilated				
	1PC1301-, 1PC1304-				
	3AA2	1070	455	315	610
	3AB2	1100			
	3AC2	935			
315 L	Cast-iron series, forced-air cooled				
	1PC1301-, 1PC1304-				
	3AA4	1217	455	315	610
	3AB4, 3AC4	1247			
	3AA5	1372			
	3AB5	1402			
	3AC5	1247			
	3AC6	1402			
	Cast-iron series, self-ventilated				
	1PC1301-, 1PC1304-				
	3AA4	1070	455	315	610
	3AB4, 3AC4	1100			
	3AA5	1225			
	3AB5	1255			
	3AC5	1100			
	3AC6	1255			

© Siemens AG 2015

Overview (continued)

Notes on the dimensions

- Dimensional drawings according to EN 50347 and IEC 60072.
- Fits
  The shaft extensions specified in the dimension tables (DIN 748) and centering spigot diameters (EN 50347) are machined with the following fits:

Dimension designation	ISO fit ISO 286-2	
D, DA	to 30	j6
	over 30 to 50	k6
	over 50	m6
N	to 250	j6
	over 250	h6
F, FA		h9
K		H17
S	flange (FF)	H17

  The drilled holes of couplings and belt pulleys should have an ISO fit of at least H7.

- Dimension tolerances
  For the following dimension designations, the admissible deviations are given below:

Dimension designation	Dimension	Admissible deviation
H	to 250	– 0.5
	over 250	– 1.0
E, EA		– 0.5

  Keyways and feather keyways (dimensions GA, GC, F and FA) are made in compliance with DIN 6885 Part 1.
- All dimensions are specified in mm.

Dimension sheet generator
(part of the DT Configurator)

A dimensional drawing can be created in the DT Configurator for every configurable motor. A dimensional drawing can be requested for every other motor.



When a complete Article No. is entered with or without order codes, a dimensional drawing can be called up under the "Documentation" tab.
These dimensional drawings can be presented in different views and sections and printed.
The corresponding dimension sheets can be exported, saved and processed further in DXF format (interchange/import format for CAD systems) or as bitmap graphics.

Online access in the Siemens Industry Mall

The DT Configurator is integrated in the Siemens Industry Mall and can be used on the Internet without installation.
English: www.siemens.com/dt-configurator

Offline access in the Interactive Catalog CA 01

The DT Configurator is also part of the Interactive Catalog CA 01 on DVD – the offline version of Siemens Industry Mall. CA 01 can be ordered from the relevant Siemens sales office or via the Internet: www.siemens.com/automation/CA01

© Siemens AG 2015

Dimensional drawings

Type of construction IM B3

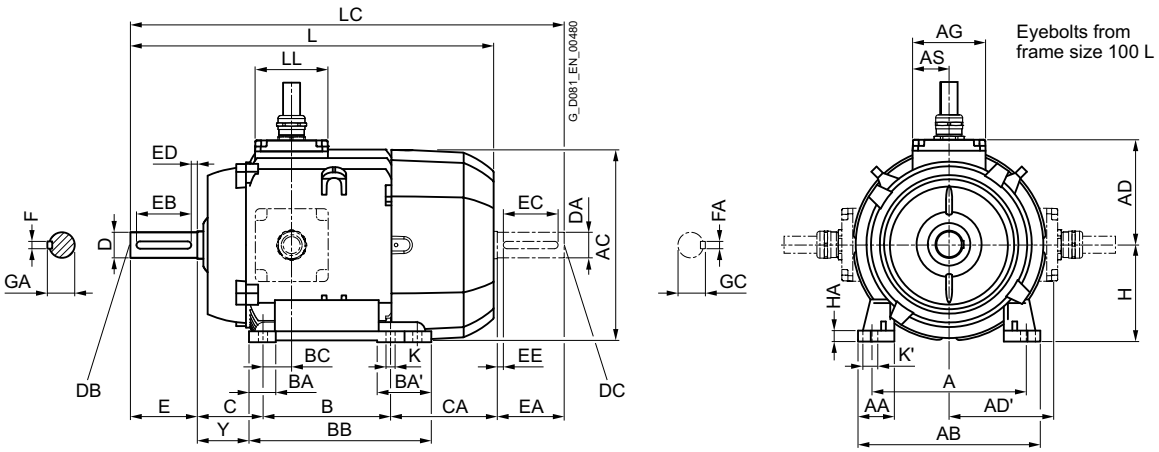

Type of construction IM B5

For flange dimensions, see Page 1/34 (**Z** = the number of retaining holes)

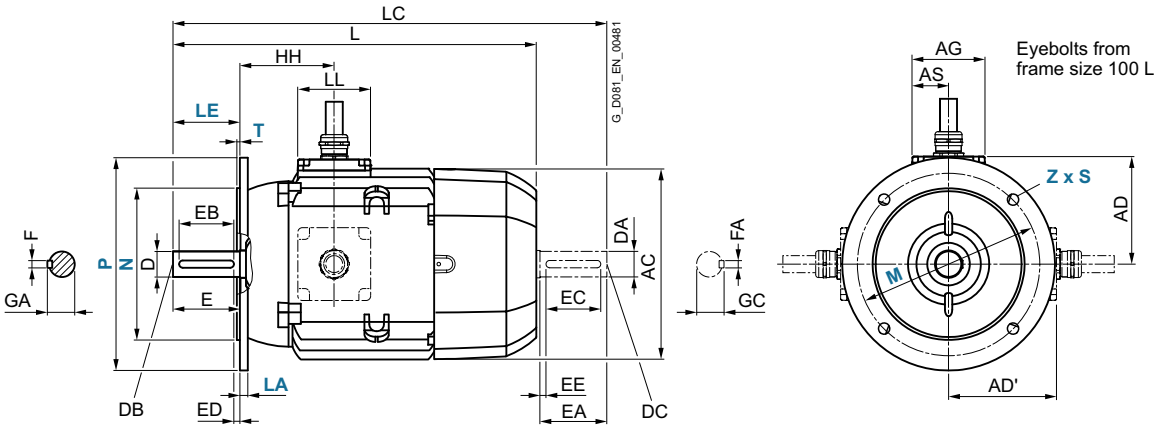

For motor	Type			Dimension designation acc. to **IEC**																	
Frame size			No. of poles	A	AA	AB	AC	AD	AD'	AG	AS	B*	BA	BA'	BB	BC	C	CA*	H	HA	Y
80 M	1PC1300	All	2, 4, 6	125	30.5	150	159	98.5	98.5	75	37.5	100	32	32	118	23	50	113	80	8	41
90 S 90 L	1PC1300	All	2, 4, 6 2, 4, 6	140	30.5	165	178	103.5	103.5	75	37.5	100 125	33	54	143	22.5	56	159 134	90	10	47
100 L	1PC1300	All	2, 4, 6	160	42	196	198	118	118	95	47.5	140	37.5	37.5	176	33.5	63	141	100	12	45
112 M	1PC1300	All	2, 4, 6	190	46	226	222	129	129	95	47.5	140	37.5	37.5	176	26	70	130	112	12	52
132 S	1PC1300 1PC1303	All 1CA0 1CA1, 1CB0	2, 4, 6 2, 4	216	53	256	262	149	149	110	55	140	38	76 76 [1]	218 218 [2]	26.5	89	167 128.5 [3] 178.5	132	15	69
132 M	1PC1300 1PC1303	All 1CB2	2, 4, 6 2, 4	216	53	256	262	149	149	110	55	178	38	76	218	26.5	89	129 178.5	132	15	69
160 M	1PC1300 1PC1303	All 1DA2, 1DA3, 1DB2	2, 4, 6 2, 4	254	60	300	314	175.5	175.5	120	60	210	44	89 89 [4]	300 300 [5]	47	108	192 148 [6]	160	18	85
160 L	1PC1300 1PC1303	All 1DA4, 1DB4	2, 4, 6 2, 4	254	60	300	314	175.5	175.5	120	60	254	44	89 –	300	47	108	148 208	160	18	85

* This dimension is assigned in EN 50347 to the frame size listed.

[1] With screwed-on feet, dimension BA' is 38 mm.
[2] With screwed-on feet, dimension BB is 180 mm.
[3] With screwed-on feet, dimension CA is 166.5 mm.
[4] With screwed-on feet, dimension BA' is 44 mm.
[5] With screwed-on feet, dimension BB is 256 mm.
[6] With screwed-on feet, dimension CA is 192 mm.

© Siemens AG 2015

Dimensional drawings (continued)

Type of construction IM B35

For flange dimensions, see Page 1/34 (**Z** = the number of retaining holes)

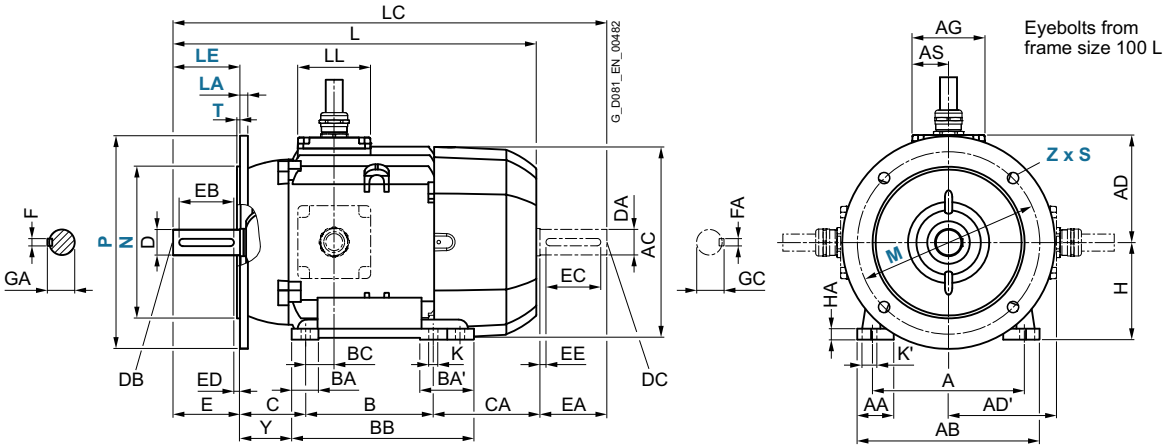

Type of construction IM B14

For flange dimensions, see Page 1/34 (**Z** = the number of retaining holes)

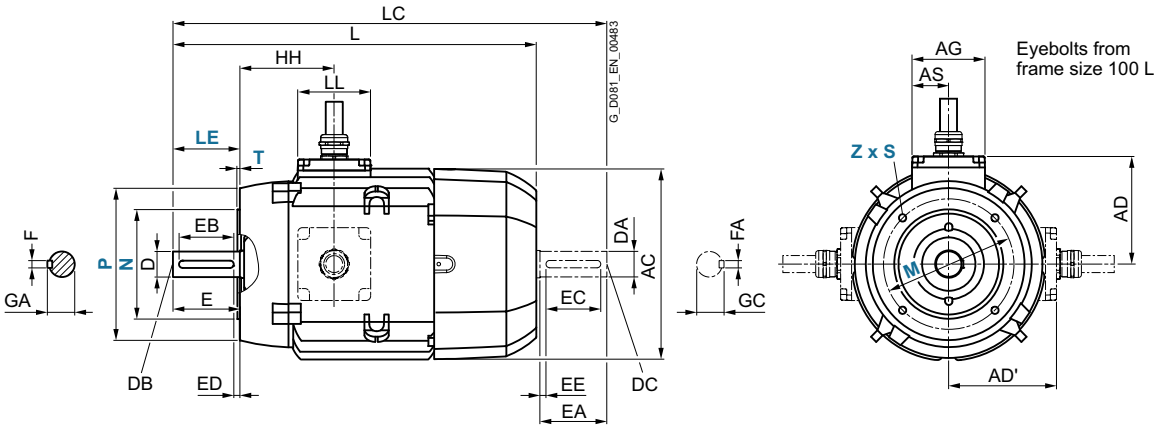

For motor	Type			Dimension designation acc. to **IEC**						DE shaft extension							NDE shaft extension						
Frame size			No. of poles	HH	K	K'	L	LC	LL	D	DB	E	EB	ED	F	GA	DA	DC	EA	EC	EE	FA	GC
80 M	1PC1300	All	2, 4, 6	73	9.5	13.5	292	343	75	19	M6	40	32	4	6	21.5	19	M6	40	32	4	6	21.5
90 S 90 L	1PC1300	All	2, 4, 6 2, 4, 6	78.5	10	14	347	405	75	24	M8	50	40	5	8	27	19	M6	40	32	4	6	21.5
100 L	1PC1300	All	2, 4, 6	96.5	12	16	395.5	454	95	28	M10	60	50	5	8	31	24	M8	50	40	5	8	27
112 M	1PC1300	All	2, 4, 6	96	12	16	389	450	95	28	M10	60	50	5	8	31	24	M8	50	40	5	8	27
132 S	1PC1300 1PC1303	All 1CA0 1CA1, 1CB0	2, 4, 6 2, 4	115.5	12	16	465 515	535.5 585.5	110	38	M12	80	70	5	10	41	28	M10	60	50	5	8	31
132 M	1PC1300 1PC1303	All 1CB2	2, 4, 6 2, 4	115.5	12	16	465 515	535.5 585.5	110	38	M12	80	70	5	10	41	28	M10	60	50	5	8	31
160 M	1PC1300 1PC1303	All 1DA2, 1DA3, 1DB2	2, 4, 6 2, 4	155	15	19	604	730	120	42	M16	110	90	10	12	45	42	M16	110	90	10	12	45
160 L	1PC1300 1PC1303	All 1DA4, 1DB4	2, 4, 6 2, 4	155	15	19	604 664	730 739	120	42	M16	110	90	10	12	45	42	M16	110	90	10	12	45

© Siemens AG 2015

Dimensional drawings

Type of construction IM B3

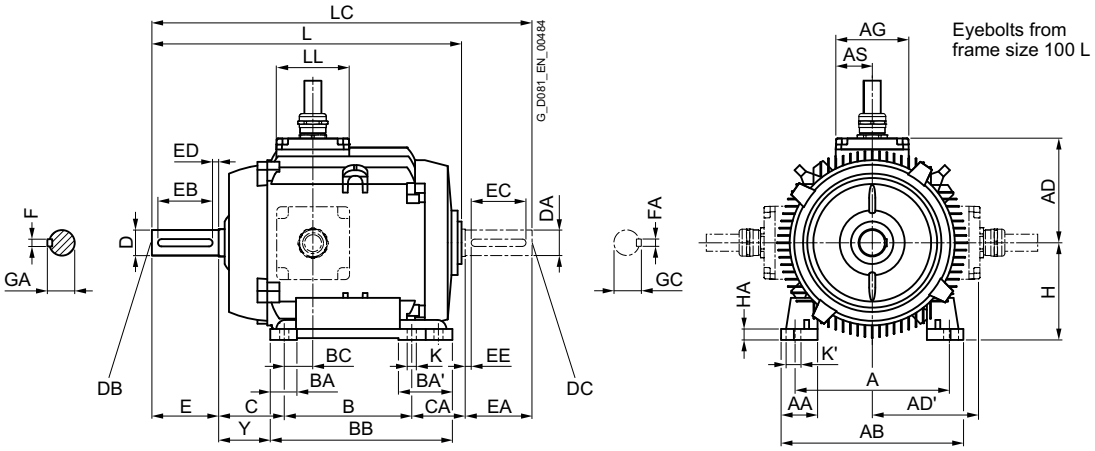

Type of construction IM B5

For flange dimensions, see Page 1/34 (**Z** = the number of retaining holes)

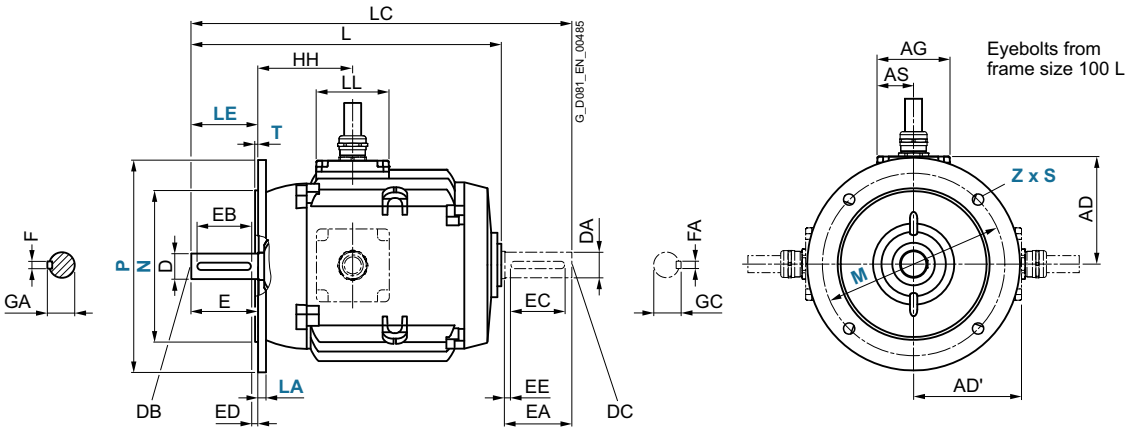

For motor	Type			Dimension designation acc. to **IEC**																
Frame size			No. of poles	A	AA	AB	AD	AD'	AG	AS	B*	BA	BA'	BB	BC	C	CA*	H	HA	Y
80 M	1PC1300	All	2, 4, 6	125	30.5	150	98.5	98.5	75	37.5	100	32	32	118	23	50	70	80	8	41
90 S 90 L	1PC1300	All	2, 4, 6 2, 4, 6	140	30.5	165	103.5	103.5	75	37.5	100 125	33	54	143	22.5	56	103 78	90	10	47
100 L	1PC1300	All	2, 4, 6	160	42	196	118	118	95	47.5	140	37.5	37.5	176	33.5	63	63	100	12	45
112 M	1PC1300	All	2, 4, 6	190	46	226	129	129	95	47.5	140	37.5	37.5	176	26	70	45	112	12	52
132 S	1PC1300 1PC1303	All 1CA0 1CA1, 1CB0	2, 4, 6 2, 4	216	53	256	149	149	110	55	140	38	76 76 [1] –	218 218 [2]	26.5	89	77 –	132	15	69
132 M	1PC1300 1PC!303	All 1CB2	2, 4, 6 2, 4	216	53	256	149	149	110	55	140 178	3	76 –	218	26.5	89	39 –	132	15	69
160 M	1PC1300 1PC1303	All 1DA2, 1DA3, 1DB2	2, 4, 6 2, 4	254	60	300	175.5	175.5	120	60	210	44	89 89 [3]	300 300 [4]	47	108	92	160	18	85
160 L	1PC1300 1PC1303	All 1DA4, 1DB4	2, 4, 6 2, 4	254	60	300	175.5	175.5	120	60	254	44	89	300	47	108	48	160	18	85

* This dimension is assigned in EN 50347 to the frame size listed.

[1] With screwed-on feet, dimension BA' is 38 mm.
[2] With screwed-on feet, dimension BB is 180 mm.
[3] With screwed-on feet, dimension BA' is 44 mm.
[4] With screwed-on feet, dimension BB is 256 mm.

© Siemens AG 2015

Dimensional drawings (continued)

Type of construction IM B35

For flange dimensions, see Page 1/34 (**Z** = the number of retaining holes)

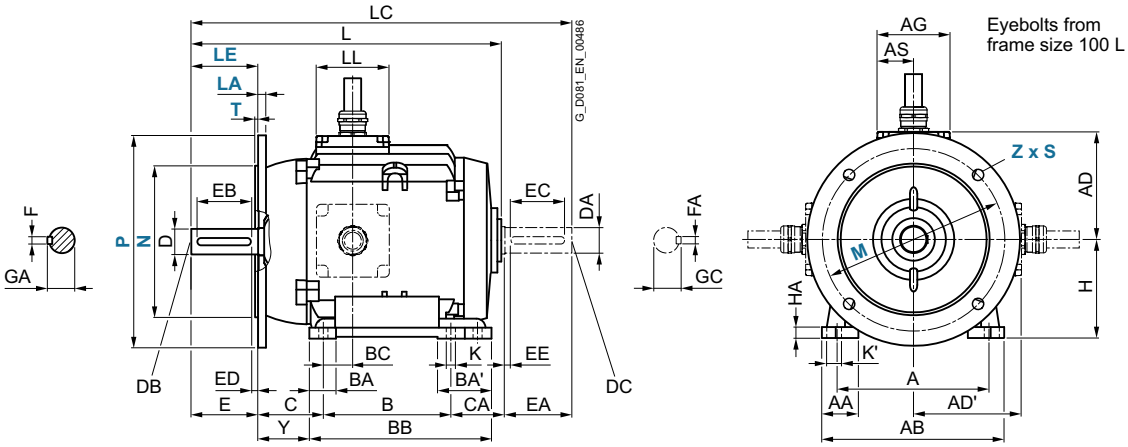

Type of construction IM B14

For flange dimensions, see Page 1/34 (**Z** = the number of retaining holes)

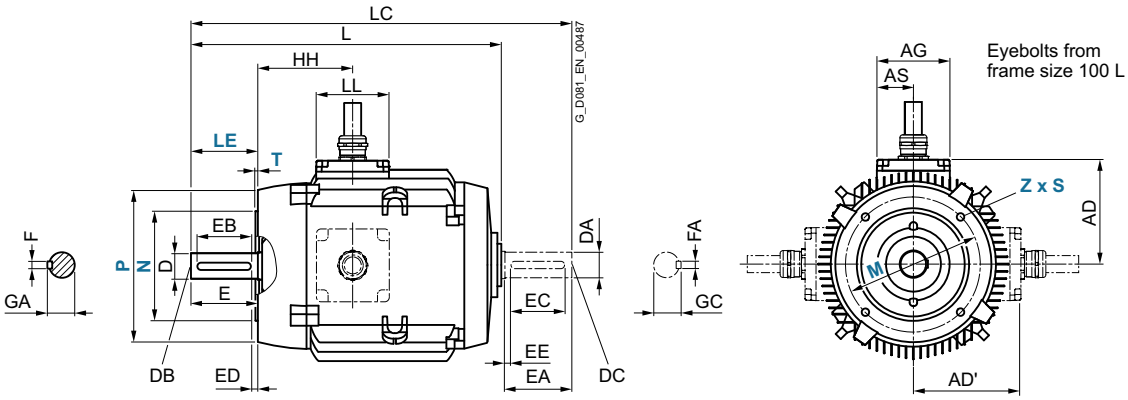

For motor	Type			Dimension designation acc. to **IEC**						DE shaft extension							NDE shaft extension						
Frame size			No. of poles	HH	K	K'	L	LC	LL	D	DB	E	EB	ED	F	GA	DA	DC	EA	EC	EE	FA	GC
80 M	1PC1300	All	2, 4, 6	73	9.5	13.5	253	300	75	19	M6	40	32	4	6	21.5	19	M6	40	32	4	6	21.5
90 S 90 L	1PC1300	All	2, 4, 6 2, 4, 6	78.5	10	14	295	349	75	24	M8	50	40	5	8	27	19	M6	40	32	4	6	21.5
100 L	1PC1300	All	2, 4, 6	96.5	12	16	321.5	376	95	28	M10	60	50	5	8	31	24	M8	50	40	5	8	27
112 M	1PC1300	All	2, 4, 6	96	12	16	311	365	95	28	M10	60	50	5	8	31	24	M8	50	40	5	8	27
132 S	1PC1300 1PC1303	All 1CA0 1CA1, 1CB0	2, 4, 6 2, 4	115.5	12	16	380.5 430.5	446 496	110	38	M12	80	70	5	10	41	28	M10	60	50	5	8	31
132 M	1PC1300 1PC1303	All 1CB2	2, 4, 6 2, 4	115.5	12	16	380.5 430.5	446 496	110	38	M12	80	70	5	10	41	28	M10	60	50	5	8	31
160 M	1PC1300 1PC1303	All 1DA2, 1DA3, 1DB2	2, 4, 6 2, 4	155	15	19	510	630	120	42	M16	110	90	10	12	45	42	M16	110	90	10	12	45
160 L	1PC1300 1PC1303	All 1DA4, 1DB4	2, 4, 6 2, 4	155	15	1	510 570	630 690	120	42	M16	110	90	10	12	45	42	M16	110	90	10	12	45

© Siemens AG 2015

Dimensional drawings

Type of construction IM B3

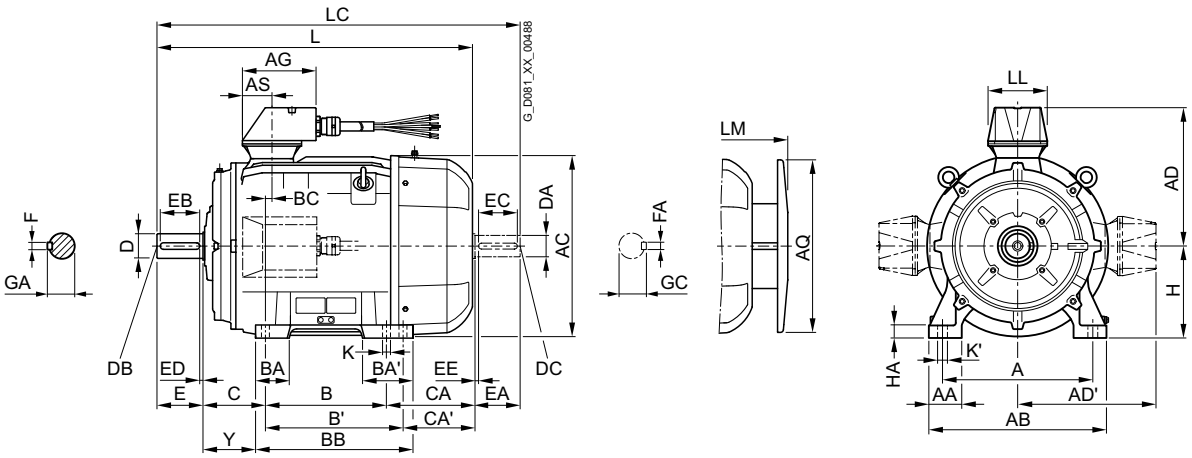

Type of construction IM B5

For flange dimensions, see Page 1/34 (**Z** = the number of retaining holes)

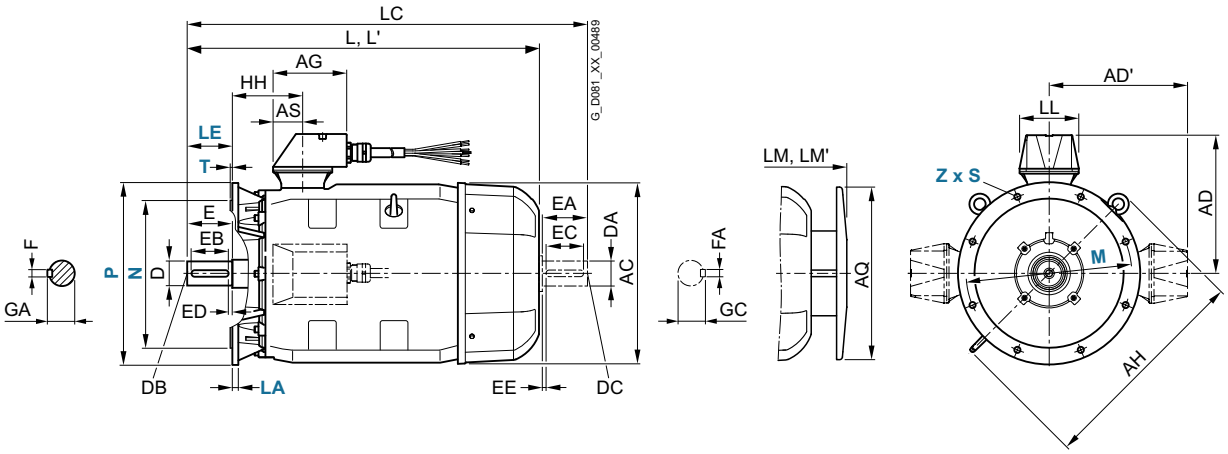

For motor	Type			Dimension designation acc. to **IEC**																				
Frame size			No. of poles	A	AA	AB	AC	AD	AD'	AG	AH	AQ'	AS	B*	B'	BA	BA'	BB	BC	C	CA	CA*	H	HA	Y
180 M	1PC1301 1PC1304	1EA2, 1EB2 1EB2	2, 4 4	279	65	339	356	244	244	100	468	340	50	241	279	85	120	328	34	121	202	164	180	20	95
180 L	1PC1301 1PC1304	1EB4 1EC4 1EA2, 1EB4	4 6 2, 4	279	65	339	356	244	244	100	468	340	50	241	279	85	120	328	34	121	232 222	194 164	180	20	95
200 L	1PC1301 1PC1304	2AA4, 2AA5 2AB5, 2AC4, 2AC5 2AA4 2AA5, 2AB5	2 4, 6 6 2 2, 4	318	70	378	396	307	307	175	533	340	65	305	–	104	104	355	31	133	177	–	200	25	108
225 S	1PC1301 1PC1304	2BB0 2BB0	4 4	356	80	436	449	328	328	175	556	425	65	286*	311	92	117	361	15	149	218	193 –	225	34	124
225 M	1PC1301 1PC1304	2BA2 2BB2, 2BC2 2BA2 2BB2	2 4, 6 2 4	356	80	436	449	328	328	175	556	425	65	286 311	311 –	92	117	361	15	149	218 253	193 –	225	34	124
250 M	1PC1301 1PC1304	2CA2 2CB2, 2CC2 2CA2 2CB2	2 4, 6 2 4	406	100	490	497	375	375	180	620	470	90	349	–	102	102	409	24	168	230	–	250	40	138

* This dimension is assigned in EN 50347 to the frame size listed.

[1] With order codes for terminal box positions (**K05**, **K06**, **H01**) only screwed-on feet with 3 drilled holes with dimension "B" (406, 457, 506 mm). The dimension will then be 666 mm.

© Siemens AG 2015

Dimensional drawings (continued)

Type of construction IM B35

For flange dimensions, see Page 1/34 (**Z** = the number of retaining holes)

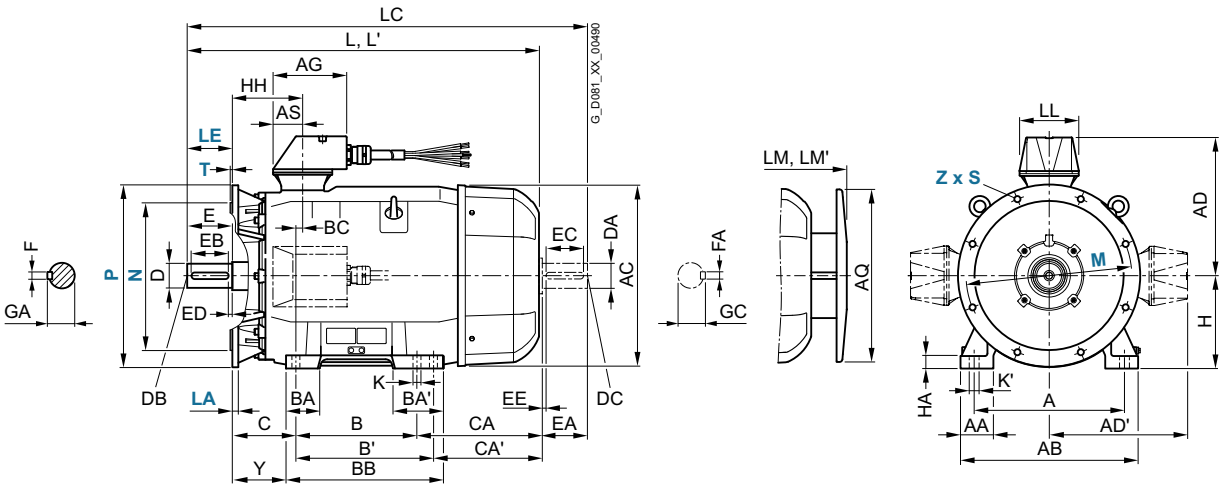

For motor	Type			Dimension designation acc. to **IEC**							DE shaft extension							NDE shaft extension						
Frame size			No. of poles	HH	K	K'	L	LC	LL	LM	D	DB	E	EB	ED	F	GA	DA	DC	EA	EC	EE	FA	GC
180 M	1PC1301	1EA2, 1EB2	2, 4	155	15	19	668	784	100	758	48	M16	110	100	5	14	51.5	48	M16	110	100	5	14	51.5
	1PC1304	1EB2	4																					
180 L	1PC1301	1EB4	4	155	15	19	698	814	100	788	48	M16	110	100	5	14	51.5	48	M16	110	100	5	14	51.5
		1EC4	6				668	784		758														
	1PC1304	1EA2, 1EB4	2, 4				698	814		788														
200 L	1PC1301	2AA4, 2AA5	2	164	19	25	721	835	130	811	55	M20	110	100	5	16	59	55	M20	110	100	5	16	59
		2AB5, 2AC4, 2AC5	4, 6																					
	1PC1304	2AA4	2																					
		2AA5, 2AB5	2, 4				746	860		836														
225 S	1PC1301	2BB0	4	164	19	25	788	903	130	888	60	M20	140	125	10	18	64	55	M20	110	100	5	16	59
	1PC1304	2BB0	4																					
225 M	1PC1301	2BA2	2	164	19	25	818	933	130	918	55	M20	110	100	5	18	59	48	M16	110	100	5	14	51.5
		2BB2, 2BC2	4, 6				848	963		948	60		140	125	10		64	55	M20				16	59
	1PC1304	2BA2	2				818	933		918	55		110	100	5	16	59	48	M16				14	51.5
		2BB2	4				848	963		948	60		140	125	10	18	64	55	M20				16	59
250 M	1PC1301	2CA2	2	192	24	30	887	1002	180	987	60	M20	140	125	10	18	64	55	M20	110	100	5	16	59
		2CB2, 2CC2	4, 6					1032			65						69	60		140	125	10	18	64
	1PC1304	2CA2	2					1002			60						64	55		110	100	5	16	59
		2CB2	4					1032			65						69	60		140	125	10	18	64

[1] In the low-noise version, a second shaft extension and/or mounted encoder is not possible.

© Siemens AG 2015

Dimensional drawings (continued)

Type of construction IM B3

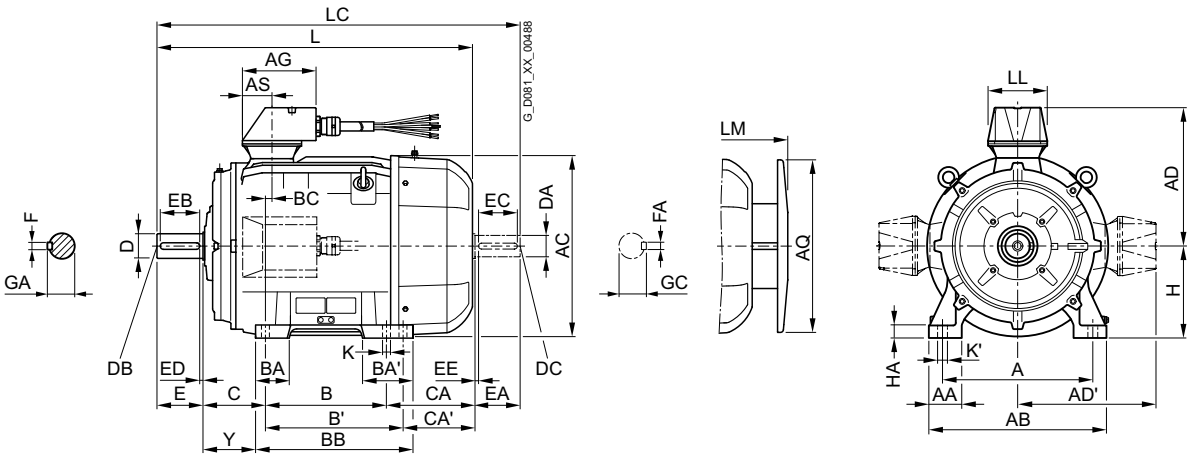

Type of construction IM B5

For flange dimensions, see Page 1/34 (**Z** = the number of retaining holes)

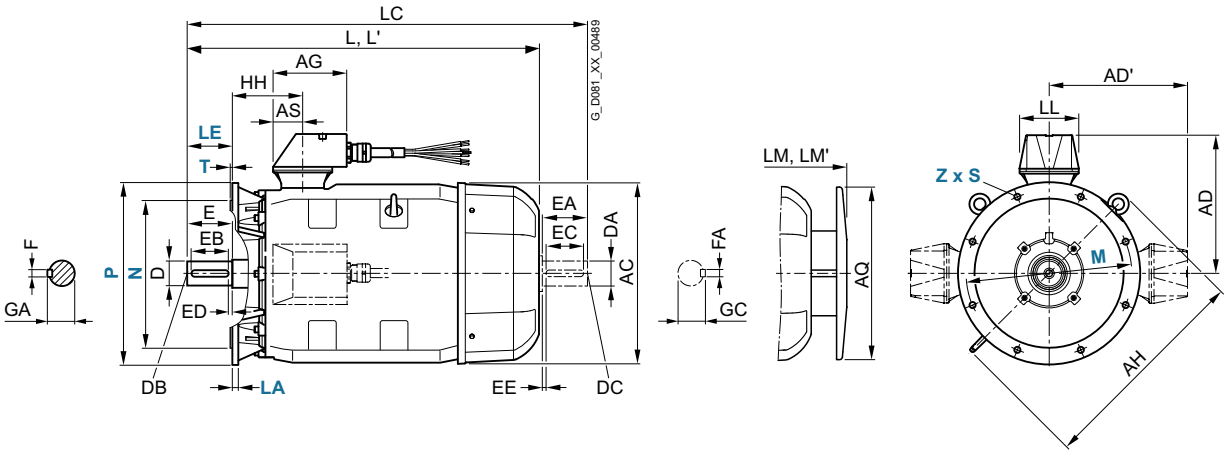

For motor Frame size	Type		No. of pol.	Dimension designation acc. to **IEC** A	AA	AB	AC	AD	AD'	AG	AH	AQ'	AS	B*	B'	BA	BA'	BB	BC	C	CA	CA*	H	HA	Y
280 S	1PC1301	2DA0	2	457	100	540	551	398	398	180	672	525	90	368	419	101	152	479	20	190	267	216	280	40	160
		2DB0, 2DC0	4, 6																						
	1PC1304	2DA0	2																			–			
		2DB0	4																						
280 M	1PC1301	2DA2	2	457	100	540	551	398	398	180	672	525	90	368	419	101	152	479	20	190	267	216	280	40	160
		2DB2	4																						
		2DC2	6																		216				
	1PC1304	2DA2	2											419	–						326	–			
		2DB2	4																						
315 S	1PC1301	3AA0	2	508	120	610	616	455	455	242	780	590	121	406	457	113	170	527	22	216	295	244	315	50	181
		3AB0, 3AC0	4, 6																						
	1PC1304	3AA0	2																						
		3AB0	4																						
315 M[1)]	1PC1301	3AA2	2	508	120	610	616	455	455	242	780	590	121	457	508	113	170	578	22	216	409	358	315	50	181
		3AB2	4																						
		3AC2	6											406	457			527			295	244			
	1PC1304	3AA2	2											457	508			578			409	358			
		3AB2	4																						
315 L[1)]	1PC1301	3AA4	2	508	120	610	616	455	455	242	780	590	121	457	508	113	170	578	22	216	409	358	315	50	181
		3AB4, 3AC4	4, 6																						
		3AA5	2													176	227	648			564	513			146
		3AB5	4																						
		3AC5	6													113	170	578			409	358			181
		3AC6	6													176	227	648			564	513			146
	1PC1304	3AA4	2											508	–	113	170	578			358	358			181
		3AB4	4																						
		3AA5	2													176	227	648			513	513			146
		3AB5	4																						

* This dimension is assigned in EN 50347 to the frame size listed.

[1)] With order codes for terminal box positions (**K05**, **K06**, **H01**) only screwed-on feet with 3 drilled holes with dimension "B" (406, 457, 506 mm). The dimension will then be 666 mm.

© Siemens AG 2015

Dimensional drawings (continued)

Type of construction IM B35

For flange dimensions, see Page 1/34 (**Z** = the number of retaining holes)

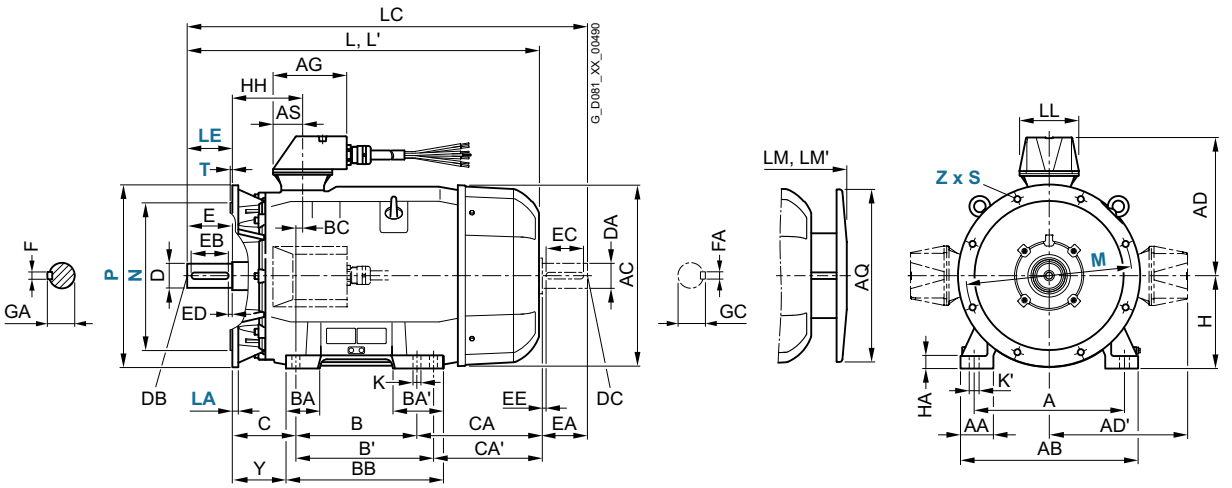

For motor	Type			Dimension designation acc. to **IEC**								DE shaft extension							NDE shaft extension						
Frame size			No. of pol.	HH	K	K'	L	LC	LL	LM	D	DB	E	EB	ED	F	GA	DA	DC	EA	EC	EE	FA	GC
280 S	1PC1301	2DA0	2	210	24	30	960	1105	180	1070	65	M20	140	125	10	18	69	60	M20	140	125	10	18	64
		2DB0, 2DC0	4, 6								75					20	79.5	65						69
	1PC1304	2DA0	2								65					18	69	60						64
		2DB0	4								75					20	79.5	65						69
280 M	1PC1301	2DA2	2	210	24	30	960	1105	180	1070	65	M20	140	125	10	18	69	60	M20	140	125	10	18	64
		2DB2	4								75					20	79.5	65						69
		2DC2	6																					
	1PC1304	2DA2	2				1070	1215		1180	65					18	69	60						64
		2DB2	4								75					20	79.5	65						69
315 S	1PC1301	3AA0	2	238	28	35	1052	1197	242	1162	65	M20	140	125	10	18	69	60	M20	140	125	10	18	64
		3AB0, 3AC0	4, 6				1082	1227		1192	80		170	140	25	22	85	70					20	74.5
	1PC1304	3AA0	2				1052	1197		1162	65		140	125	10	18	69	60					18	64
		3AB0	4				1082	1227		1192	80		170	140	25	22	85	70					20	74.5
315 M	1PC1301	3AA2	2	238	28	35	1217	1362	242	1327	65	M20	140	125	10	18	69	60	M20	140	125	10	18	64
		3AB2	4				1247	1392		1357	80		170	140	25	22	85	70					20	74.5
		3AC2	6				1082	1227		1192														
	1PC1304	3AA2	2				1217	1362		1327	60		140	125	10	18	69	60					18	64
		3AB2	4				1247	1392		1357	85		170	140	25	22	85	70					20	74.5
315 L	1PC1301	3AA4	2	238	28	35	1217	1362	242	1327	65	M20	140	125	10	18	69	60	M20	140	125	10	18	64
		3AB4, 3AC4	4, 6				1247	1392		1357	80		170	140	25	22	85	70					20	74.5
		3AA5	2				1372	1517		1482	65		140	125	10	18	69	60					18	64
		3AB5	4				1402	1547		1512	80		170	140	25	22	85	70					20	74.5
		3AC5	6				1247	1392		1357														
		3AC6	6				1402	1547		1512														
	1PC1304	3AA4	2				1217	1362		1327	65		140	125	10	18	69	60					18	64
		3AB4	4				1247	1392		1357	80		170	140	25	22	85	70					20	74.5
		3AA5	2				1372	1517		1482	65		140	125	10	18	69	60					18	64
		3AB5	4				1402	1547		1512	80		170	140	25	22	85	70					20	74.5

[1] In the low-noise version, a second shaft extension and/or mounted encoder is not possible.

© Siemens AG 2015

Dimensional drawings

Type of construction IM B3

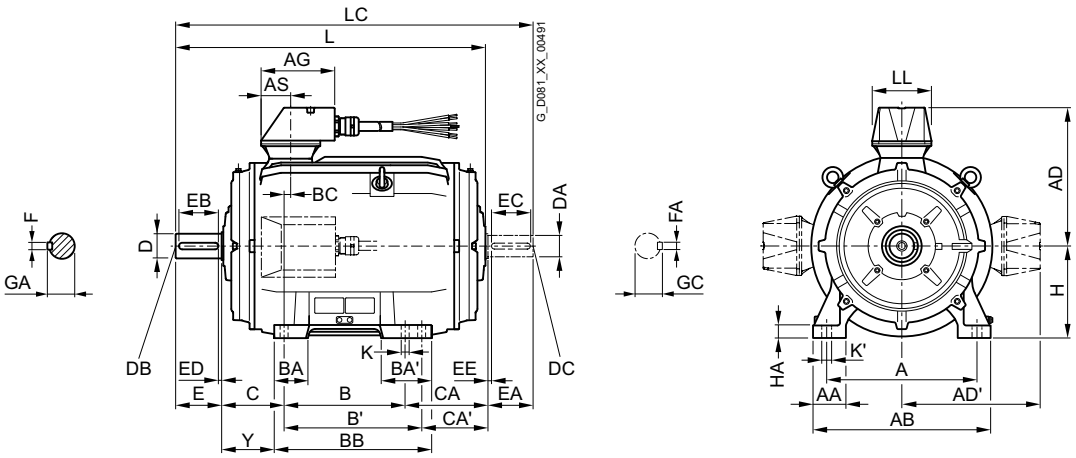

Types of construction IM B5 and IM V1

For flange dimensions, see Page 1/34 (**Z** = the number of retaining holes)

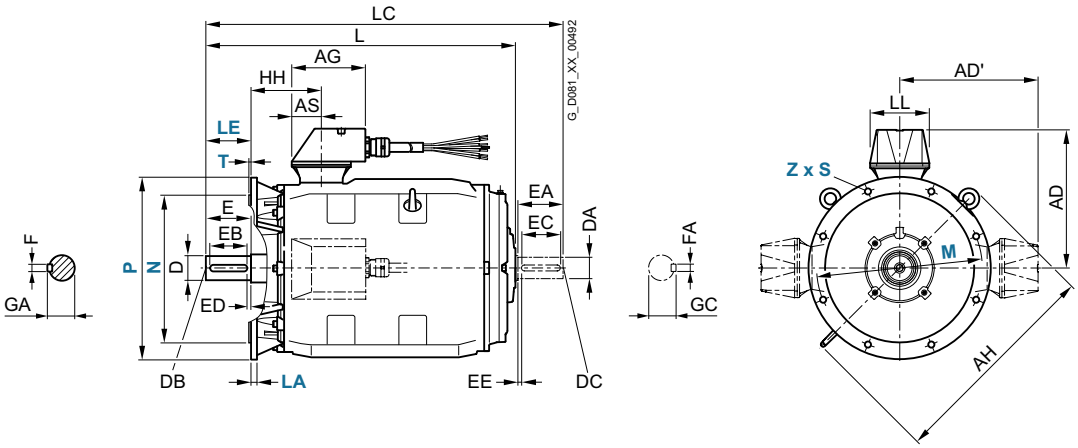

For motor Frame size	Type		No. of poles	Dimension designation acc. to **IEC** A	AA	AB	AD	AD'	AG	AH	AS	B*	B'	BA	BA'	BB	BC	C	CA	CA*	H	HA	Y
180 M	1PC1301	1EA2, 1EB2	2, 4	279	65	339	244	244	100	468	50	241*	279	85	120	328	34	121	94	56	180	20	95
	1PC1304	1EB2	4																				
180 L	1PC1301	1EB4	4	279	65	339	244	244	100	468	50	241*	279	85	120	328	34	121	124	86	180	20	95
		1EC4	6																94	56			
	1PC1304	1EA2, 1EB2	2, 4																				
200 L	1PC1301	2AA4, 2AA5	2	318	70	378	307	307	175	533	65	305*	–	104	104	355	31	133	76	–	200	25	108
		2AB5, 2AC4	4, 6																				
		2AC5	6																				
	1PC1304	2AA4	2																				
		2AA5, 2AB5	2, 4																				
225 S	1PC1301	2BB0	4	356	80	436	328	328	175	556	65	286	311	92	117	361	15	149	99	74	225	34	124
	1PC1304	2BB0	4																				
225 M	1PC1301	2BA2	2	356	80	436	328	328	175	556	65	286	311	92	117	361	15	149	159	134	225	34	124
		2BB2, 2BC2	4, 6																				
	1PC1304	2BA2	2									311	–							–			
		2BB2	4																				
250 M	1PC1301	2CA2	2	406	100	490	375	375	180	620	90	349	–	102	102	409	24	168	111	–	250	40	138
		2CB2, 2CC2	4, 6																				
	1PC1304	2CA2	2																				
		2CB2	4																				

* This dimension is assigned in EN 50347 to the frame size listed.

[1] With order codes for terminal box positions (**K05**, **K06**, **H01**) only screwed-on feet with 3 drilled holes with dimension "B" (406, 457, 506 mm). The dimension will then be 666 mm.

© Siemens AG 2015

Dimensional drawings (continued)

Type of construction IM B35

For flange dimensions, see Page 1/34 (**Z** = the number of retaining holes)

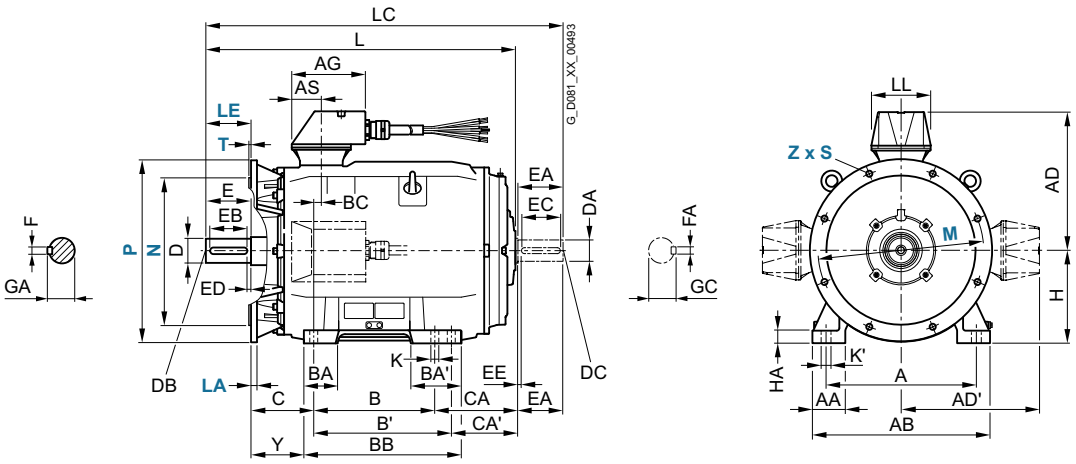

For motor	Type			Dimension designation acc. to **IEC**						DE shaft extension							NDE shaft extension						
Frame size			No. of poles	HH	K	K'	L	LC	LL	D	DB	E	EB	ED	F	GA	DA	DC	EA	EC	EE	FA	GC
180 M	1PC1301	1EA2, 1EB2	2, 4	155	15	19	562	676	100	48	M16	110	100	5	14	51.5	48	M16	110	100	5	14	51.5
	1PC1304	1EB2	4																				
180 L	1PC1301	1EB4	4	155	15	19	592	706	100	48	M16	110	100	5	14	51.5	48	M16	110	100	5	14	51.5
		1EC4	6				562	676															
	1PC1304	1EA2, 1EB2	2, 4																				
200 L	1PC1301	2AA4, 2AA5	2	164	19	25	617	734	130	55	M20	110	100	5	16	59	55	M20	110	100	5	16	59
		2AB5, 2AC4, 2AC5	4, 6																				
	1PC1304	2AA4	2																				
		2AA5, 2AB5	2, 4				642	759															
225 S	1PC1301	2BB0	4	164	19	25	610	724	130	60	M20	140	125	10	18	64	55	M20	110	100	5	16	59
	1PC1304	2BB0	4																				
225 M	1PC1301	2BA2	4	164	19	25	700	814	130	55	M20	110	100	5	18	59	48	M16	110	100	5	14	51.5
		2BB2, 2BC2	4, 6				730	844		60		140	125	10		64	55	M20				16	59
	1PC1304	2BA2	2				700	814		55		110	100	5	16	59	48	M16				14	51.5
		2BB2	4				730	844		60		140	125	10	18	64	55	M20				16	59
250 M	1PC1301	2CA2	2	192	24	30	764	878	180	60	M20	140	125	10	18	64	55	M20	110	100	5	16	59
		2CB2, 2CC2	4, 6					908		65						69	60		140	125	10	18	64
	1PC1304	2CA2	2					978		60						64	55		110	100	5	16	59
		2CB2	4					908		65						69	60		140	125	10	18	64

[1] In the low-noise version, a second shaft extension and/or mounted encoder is not possible.

© Siemens AG 2015

Dimensional drawings (continued)

Type of construction IM B3

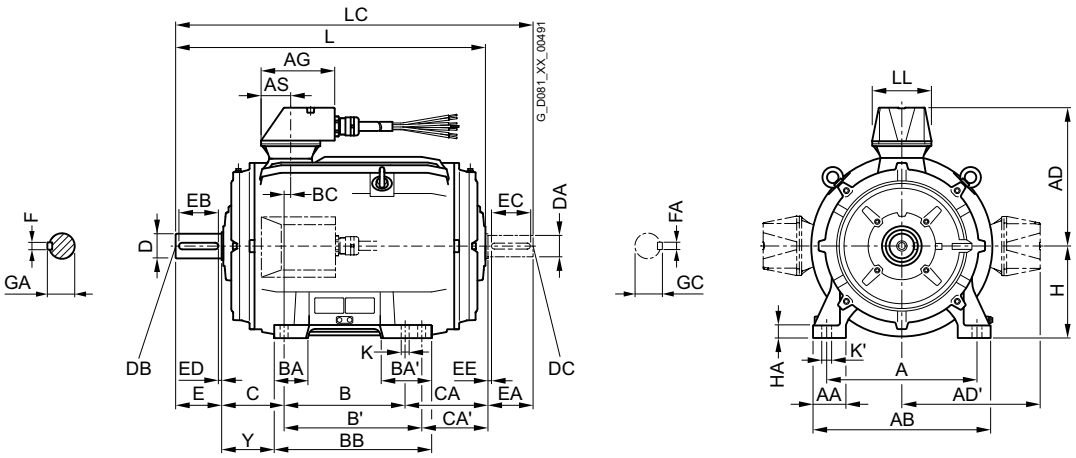

Types of construction IM B5 and IM V1

For flange dimensions, see Page 1/34 (**Z** = the number of retaining holes)

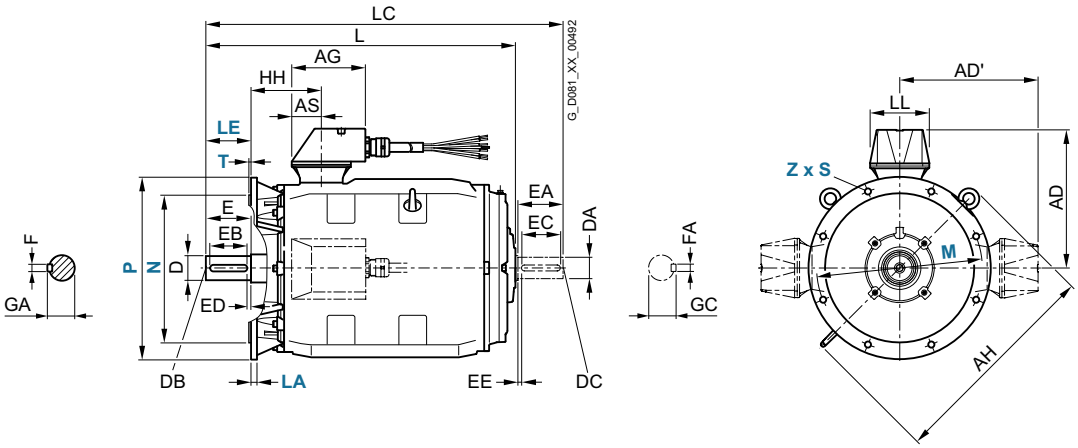

For motor Frame size	Type		No. of pol.	Dimension designation acc. to **IEC** A	AA	AB	AD	AD'	AG	AH	AS	B*	B'	BA	BA'	BB	BC	C	CA	CA*	H	HA	Y
280 S	1PC1301	2DA0	2	457	100	540	398	398	180	672	90	368	419	101	152	479	20	190	137	86	280	40	160
		2DB0, 2DC0	4, 6																				
	1PC1304	2DA0	2																				
		2DB0	4																				
280 M	1PC1301	2DA2	2	457	100	540	398	398	180	672	90	368	419	101	152	479	20	190	137	86	280	40	160
		2DB2, 2DC2	4, 6																				
	1PC1304	2DA2	2									419	–						196	–			
		2DB2	4																				
315 S	1PC1301	3AA0	2	508	120	610	455	455	242	780	121	406	457	113	170	527	22	216	148	97	315	50	181
		3AB0, 3AC0	4, 6																				
	1PC1304	3AA0	2																				
		3AB0	4																				
315 M[1)]	1PC1301	3AA2	2	508	120	610	455	455	242	780	121	457	508	113	170	578	22	216	262	211	315	50	181
		3AB2	4									406	457			527			148	97			
		3AC2	6									457	508			578			262	211			
	1PC1304	3AA2	2																				
		3AB2	4																				
315 L[1)]	1PC1301	3AA4	2	508	120	610	455	455	242	780	121	457	508	113	170	578	22	216	262	211	315	50	181
		3AB4, 3AC4	4, 6																				
		3AA5	2											176	227	648			417	366			146
		3AB5	4																				
		3AC5	6											113	170	578			262	211			181
		3AC6	6											176	227	648			417	366			146
	1PC1304	3AA4	2									508	–	113	170	578			211	–			181
		3AB4	4																				
		3AA5	2											176	227	648			366	–			146
		3AB5	4																				

* This dimension is assigned in EN 50347 to the frame size listed.

[1)] With order codes for terminal box positions (**K05**, **K06**, **H01**) only screwed-on feet with 3 drilled holes with dimension "B" (406, 457, 506 mm). The dimension will then be 666 mm.

© Siemens AG 2015

Dimensional drawings (continued)

Type of construction IM B35

For flange dimensions, see Page 1/34 (**Z** = the number of retaining holes)

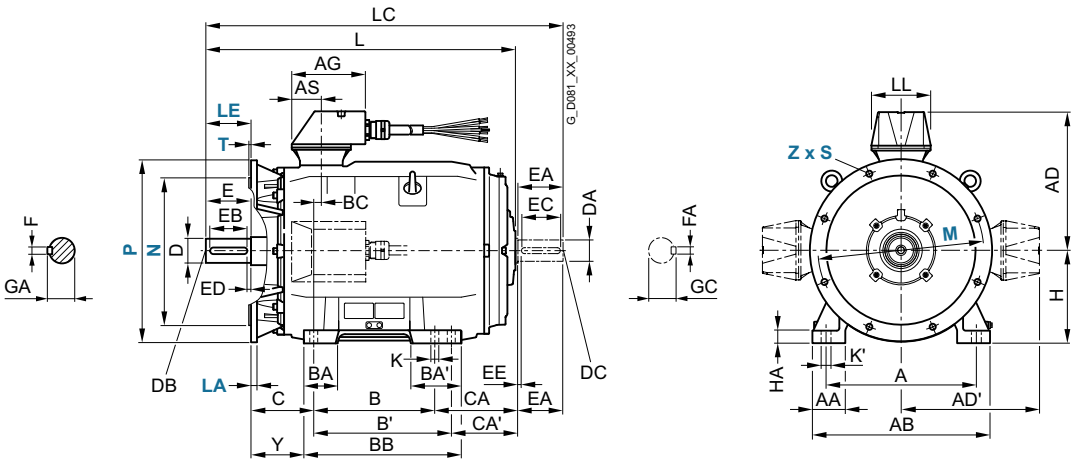

For motor	Type			Dimension designation acc. to IEC						DE shaft extension							NDE shaft extension						
Frame size			No. of pol.	HH	K	K'	L	LC	LL	D	DB	E	EB	ED	F	GA	DA	DC	EA	EC	EE	FA	GC
280 S	1PC1301	2DA0	2	210	24	30	830	975	180	65	M20	140	125	10	18	69	60	M20	140	125	10	18	64
		2DB0, 2DC0	4, 6							75					20	79.5	65						69
	1PC1304	2DA0	2							65					18	69	60						64
		2DB0	4							75					20	79.5	65						69
280 M	1PC1301	2DA2	2	210	24	30	830	975	180	65	M20	140	125	10	18	69	60	M20	140	125	10	18	64
		2DB2, 2DC2	4, 6							75					20	79.5	65						69
	1PC1304	2DA2	2				940	1085		65					18	69	60						64
		2DB2	4							75					20	79.5	65						69
315 S	1PC1301	3AA0	2	238	28	35	905	1050	242	65	M20	140	125	10	18	69	60	M20	140	125	10	18	64
		3AB0, 3AC0	4, 6				935	1100		80		170	140	25	22	85	70					20	74.5
	1PC1304	3AA0	2				905	1050		65		140	125	10	18	69	60					18	64
		3AB0	4				935	1100		80		170	140	25	22	85	70					20	74.5
315 M	1PC1301	3AA2	2	238	28	35	1070	1215	242	65	M20	140	125	10	18	69	60	M20	140	125	10	18	64
		3AB2	4				1100	1245		80		170	140	25	22	85	70					20	74.5
		3AC2	6				935	1100															
	1PC1304	3AA2	2				1070	1215		65		140	125	10	18	69	60					18	64
		3AB2	4				1100	1245		80		170	140	25	22	85	70					20	74.5
315 L	1PC1301	3AA4	2	238	28	35	1070	1215	242	65	M20	140	125	10	18	69	60	M20	140	125	10	18	64
		3AB4, 3AC4	4, 6				1100	1245		80		170	140	25	22	85	70					20	74.5
		3AA5	2				1225	1370		65		140	125	10	18	69	60					18	64
		3AB5	4				1255	1400		80		170	140	25	22	58	70					20	74.5
		3AC5	6				1100	1245															
		3AC6	6				1255	1400															
	1PC1304	3AA4	2				1070	1215		65		140	125	10	18	69	60					18	64
		3AB4	4				1100	1245		80		170	140	25	22	85	70					20	74.5
		3AA5	2				1225	1370		65		140	125	10	18	69	60					18	64
		3AB5	4				1255	1400		80		170	140	25	22	85	70					20	74.5

[1] In the low-noise version, a second shaft extension and/or mounted encoder is not possible.

© Siemens AG 2015

Orientation

Overview



Low-voltage motors in the marine version can be used below deck on ships and in the offshore industry. The thermal utilization of the motors is adapted to the generally higher ambient temperatures onboard ships. If the application demands compliance with additional regulations, such as explosion protection (Directive 94/9/EC (ATEX 95)), the appropriate motor series must be chosen.

The motors on board ships are generally subdivided into three classes of importance by the marine classification societies in cooperation with customers, depending on the field of application:

- **Essential Service for Propulsion** or also referred to as Primary Essential Service
- **Essential Service** or also referred to as Secondary Essential Service or Important Service
- **Non-Essential Service** or also referred to as Non-Important Service

The class of importance must be specified by the customer (ordering party). Retrospective certification by means of individual acceptance test or construction supervision cannot be issued.

The categories include the following requirements of the classification societies:

	Class of importance		
	Essential Service for Propulsion	**Essential Service**	**Non-essential Service**
Typical applications	Propeller drive, thruster	Thrusters, lateral thrust units, anchor winches, bilge and ballast pumps, fire-fighting pumps	Pumps for service water
Version	In accordance with the regulations of the classification society		In accordance with ambient conditions of the classification society
Acceptance test certificate	Acceptance test certificate 3.2 in accordance with EN 10204	Acceptance test certificate 3.1 in accordance with EN 10204	None
Individual acceptance by classification society	Necessary if no type test certificate exists or the rated power lies above the limit defined by the classification society		Not required
Type test	Not a requirement of the classification societies. For standard motors up to frame size 315 L, a type test certificate is supplied. These motors can only be ordered with options E11 to E54 in accordance with the classification society.		
Ordering several identical motors	Differentiation between the first motor and additional ones must be realized when ordering using an order code		No distinction
Rating plate data	Information about ambient conditions of the classification society		
Stamp of the classification society	Stamp on shaft and housing		No stamp

Classification authorities

Society	Abbreviation	Location
American Bureau of Shipping	**ABS**	USA
Bureau Veritas	**BV**	France
Det Norske Veritas	**DNV**	Norway
Germanischer Lloyd	**GL**	Germany
Korean Register	**KR**	Korea
Lloyds Register	**LR**	UK
Registro Italiano Navale	**RINA**	Italy
Russian Maritime Register of Shipping	**RS**	Russia

© Siemens AG 2015

Overview

Type test (type approval)

All 1LE1, 1MB1, 1PC1, 1PC3 motors (with the exception of 1LA8, 1PQ8, 1LL8 and 1LH8) are manufactured and type tested in accordance with the regulations of the following international classification societies:

- ABS (American Bureau of Shipping)
- BV (Bureau Veritas, France)
- DNV (Det Norske Veritas, Norway)
- GL (Germanischer Lloyd, Germany)
- KR (Korean Register of Shipping)
- LR (Lloyds Register of Shipping)
- Registro Italiano Navale (RINA)
- Russian Maritime Register of Shipping (RS)

Special versions that differ from the range defined in the catalog are possible on request.

Benefits

The marine motors offer the user a number of advantages and benefits:

- Cast-iron versions can be supplied for corrosive atmospheres especially for high humidity levels and salty air
- Increased corrosion protection using specially designed paint finishes is available
- Certified marine motors can be supplied for use in areas to be protected against explosion (hazardous zones)
- Due to the existing type test, individual acceptance test in power ranges below the power limits defined by the classification societies is not required which means short delivery times
- In depth know-how regarding customer requirements
- Worldwide service network with 24 hour service hotline for motors and converters

© Siemens AG 2015

Orientation

Application

Our type tested marine motors are specially designed for use on board ship below deck and for the offshore industry:

- Applications onboard ships as main and auxiliary drives below deck, e.g.:
  - Fans (air conditioning systems, refrigeration plants)
  - Pumps (for fire-extinguishing water, fuels, oils)
  - Winches (anchor winches, warping winches, lifting gear)
  - Compressors
  - Bow thruster drives
  - Ex motors for hazardous zones
- Application in the offshore industry
  - Coastal areas, e.g. production platforms, production ships

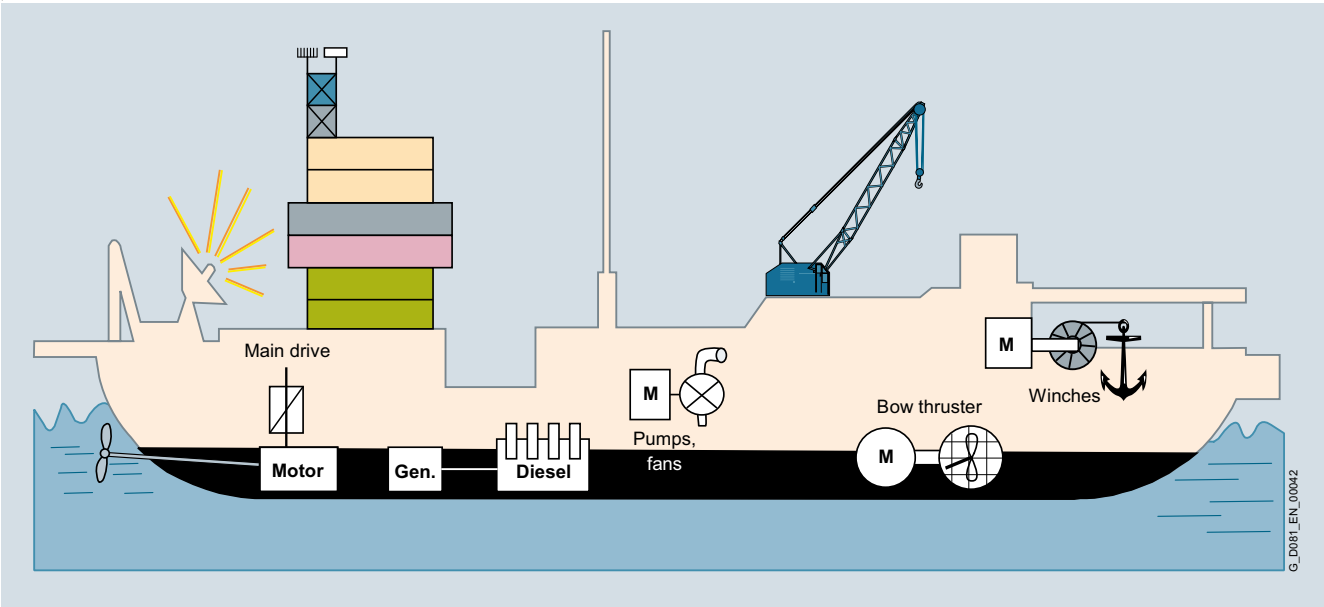

Typical applications

Technical specifications

Housing design

Motors can be supplied depending on the motor series in a corrosion-resistant aluminum housing and in a rugged low-vibration cast-iron version.

Motor connection

Cable glands are not included in the standard scope of supply with the exception of explosion-proof motors (see "Special versions").

All marine motors generally have an external grounding terminal.

Mountings (encoder, separately driven fan, brake)

Brakes, encoders and separately driven fans from our basic series (1LE, 1MB) are accepted as mountings without a separate certificate from the marine classification societies by the following: GL, LR, RINA, RS, DNV, ABS and KR.

However, BV always demands separate certification for encoders. For this reason, 1LE1, 1MB1, 1PC1 and 1PC3 motors for BV can only be supplied in the "prepared for encoder mounting" condition. In this instance, the customer must bear responsibility for purchasing and installing a suitable encoder. With respect to brakes and separately driven fans, BV will also accept Siemens standard components.

Fan / fan cowl

Fans and fan cowls are made from the same materials as components from the basic series. BV stipulates that these components must be made of metal and they are automatically supplied in this material when order code **E31** is specified.

© Siemens AG 2015

Technical specifications (continued)

Specifications of the individual classification societies with order codes (options) for motors in frame sizes 71M- 315 L

Classification society	Coolant temperature CT	Admissible temperature rise limit according to the classification society		Rated power limit for individual acceptance test for essential service drive	Rated power limit for construction supervision for essential service drive	Order codes for surface-cooled motors up to frame size 315 L with type test certificate
		Temperature class				
		130 (B)	155 (F)			
	°C	K	K	kW	kW	
GL	45	75	100	≥ 50	–	E11
LR	45	70	95	≥ 100	≥ 100	E21
BV	45	75	100	≥ 100	–	E31
DNV	45	75	100	≥ 300	–	E51
ABS	50	70	95	≥ 100 [1]	–	E52
RINA	45	75	100	≥ 100	–	E41
RS	45	75	95	≥ 20	–	E46
KR	45	75	95	≥ 7.5	–	E54

Type test certificate



[1] Required for all ratings for ATEX compliance.

© Siemens AG 2015

Technical specifications (continued)

Temperature class and coolant temperature

SIMOTICS GP/SD standard motors and SIMOTICS XP explosion-proof motors up to frame size 315 L

In general, marine motors are designed for a coolant temperature CT 45 °C in temperature class 155 (F) – used according to 155 (F) – with thermal reserve. When motors are used according to temperature class 130 (B) (order code **N05**), derating is required. For standard motors up to frame size 315 L, the derating is approx. 4 % (for order codes **E52** and **E21** approx. 8 %).

1MB1 motors in Zones 2, 21 and 22 are designed for temperature class 155 (F) – used according to temperature class 130 (B) – with derating of approx. 4 % (with order code **E52** approx. 8 %). Motors with increased output in temperature class 155 (F) – used according to temperature class 155 (F) – are also derated by approx. 4 % (with order code **E52** and **E21** approx. 8 %).
If temperature class 155 (F) is to be used according to 130 (B), further derating of approximately 10 % is required.

Coolant temperatures that exceed CT 45 °C require derating in accordance with the following table:

	Coolant temperature CT			
	45 °C	50 °C	55 °C	60 °C
Temperature class 155 (F) used according to 155 (F)				
Derating factor for line operation	1.00	0.96	0.92	0.87

Non-standard motors SIMOTICS N-compact

For the non-standard motors 1LA8, 1PQ8 the following derating factors apply for increased coolant temperatures and with line operation:

	Coolant temperature CT			
	45 °C	50 °C	55 °C	60 °C
Temperature class 155 (F) used according to 155 (F)				
Derating factor for line operation	1.00	0.96	0.92	0.87
Temperature class 155 (F) used according to 130 (B)				
Derating factor for line operation	0.90	0.86	0.83	0.78

For the non-standard motors 1LA8, 1PQ8 the following derating factors apply for increased coolant temperatures and converter operation:

	Coolant temperature CT			
	45 °C	50 °C	55 °C	60 °C
Temperature class 155 (F) used according to 155 (F)				
Derating factor for converter operation	0.96	0.92	0.87	0.82
Temperature class 155 (F) used according to 130 (B)				
Derating factor for converter operation	0.82	0.78	0.74	0.70

More detailed information is available on request.

Rating plate and acceptance test certificate

The rating plate indicates the relevant classification society and the associated coolant temperature

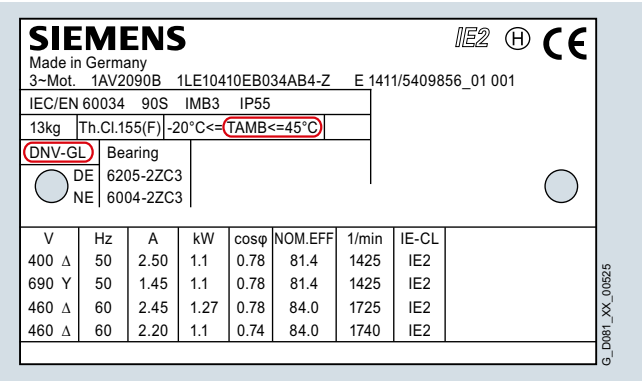

Rating plate for a marine motor according to DNV

Degree of protection

The protection classes applicable here are specified in the catalog sections for basic series 1LE1/1MB1/1PC1. With IP56, icing must be avoided.

Winding and motor protection

For monitoring the winding and bearings, the motors can be equipped with thermistors, temperature sensors and resistance thermometers. Anti-condensation heaters can also be fitted to the marine motors to prevent condensation building up on the winding.

Paint finish

The standard paint finish is suitable for indoor installations or outdoor installations which are roof-protected against weathering.

When installing the standard motors in sea air or in rooms with permanent moisture, the special paint type climate group "worldwide" according to IEC 60721-2-1 is appropriate, because this ensures a higher degree of corrosion protection. Most marine motors are finished in this special paint type as standard (see "Special versions").

With particularly corrosive atmospheres, the sea-air-resistant special finish (order code **S03**) or the offshore special paint system (order code **S04**) is recommended.

Special paint colors and increased film thicknesses are available on request.

Converter operation

The standard insulation of the motors is designed such that converter operation is permissible at line voltages up to $U_{rated} \leq 500$ V. Compliance with the following limit values is essential (voltage values are peak values):
$\hat{U}_{phase\text{-}to\text{-}phase} \leq 1500$ V,
$\hat{U}_{phase\text{-}to\text{-}ground} \leq 1100$ V, voltage rise times of $t_s > 0.1$ µs.
Operation at higher voltage peaks (e.g. on a converter with controlled input, AFE, ALM) requires motors with increased insulation strength.
Please inquire in this case.

During installation, the EMC guidelines must be complied with. This does not apply to motors in type of protection Ex e according to IEC/EN 60079-2 that are certified only for line operation.

It is important to note the extent to which the converter used must also be acceptance tested by the marine classification authority.

© Siemens AG 2015

Technical specifications (continued)

Recommended special versions:

- Motor protection by PTC thermistor with 3 embedded temperature sensors for tripping – 15th position of Article No. "**B**"
- Installation of Pt100 resistance thermometers for winding temperature monitoring – 16th position of Article No. **"H"**
- Specially for motor series 1LA8, 1PQ8 and 1LL8: Installation of 2 Pt100 screw-in resistance thermometers in basic circuit for roller bearings – order code **A72**
- Anti-condensation heating for 230 V – order code **Q02**
- Anti-condensation heating for 115 V – order code **Q03**
- IP56 degree of protection for protection against harmful dust deposits, protection against water jets from any direction – order code **H22**
- IP65 degree of protection for complete protection against dust deposits, protection against water jets from any direction – order code **H20**
  Not possible for 1LA8, 1PQ8 and 1LL8 non-standard motors
- Special bearing for drive-end (DE) and non-drive-end (NDE), bearing size 63 – order code **L25**, for non-standard motors on request
- Metal external fan for self-ventilated motors – order code **F76** (standard with order code **E31**)

Additional notes

Order information

The fees levied by the classification societies for individual acceptance testing are included in order code **E09** or **B10** for motor types 1LE1, 1MB1, 1PC1 and 1PC3.

When ordering, add the supplement **-Z** to the Article No. and state details in plain text if required.

For information about other special versions, refer to the appropriate sections under "SIMOTICS GP/SD 1LE1/1PC1 standard motors" and "SIMOTICS XP 1MB1 explosion-proof motors".

In addition to this, for marine motors, the following special versions are the "Standard version" and therefore included in the order codes for the basic marine version.

Standard version:

Designation	Order code
Acceptance test certificate 3.1 in accordance with EN 10204 Note: The delivery time for the factory test certificate may differ from the delivery time for the motor.	**B02**
External grounding terminal	**H04**

Ordering example

Selection criteria	Requirement	Structure of the Article No.
Motor type	SIMOTICS SD Basic Line, efficiency class IE3 Premium Efficiency, degree of protection IP55, type of construction IM B3, without winding protection, terminal box at top	**1LE1503**
No. of poles, speed, rated output	4-pole, 1500 rpm, 55 kW	**1LE1503-2CB2**
Voltage, frequency	400 VΔ/690 VY, 50 Hz	**1LE1503-2CB23-4**
Type of construction	IM B3	**1LE1503-2CB23-4A**
Motor protection	3 PTC thermistors for tripping	**1LE1503-2CB23-4AB**
Terminal box position	Terminal box right	**1LE1503-2CB23-4AB5**
Paint finish	Finish in "Brilliant blue" RAL 5007	**1LE1503-2CB23-4AB5-Z Y53** Plain text: **RAL5007**
Marine version	Drive for "essential services" with type test certificate according to **Germanischer Lloyd** with coolant temperature CT 45 °C	**1LE1503-2CB23-4AB5-Z Y53+E11** Plain text: **RAL5007**
	Individual acceptance (by marine classification society)	**1LE1503-2CB23-4AB5-Z Y53+E11+B10** Plain text: **RAL5007**
Motor order		
	Type test with temperature-rise run for horizontal motors, with acceptance	**1LE1503-2CB23-4AB5-Z Y53+E11+B10+B83** Plain text: **RAL5007**

The ordering example is valid for an order quantity of 1 item. For larger order quantities, a type test with heat run (order code **B83**) only has to be ordered for one motor. It is not necessary to specify order code **B83** for any further identical motors (in the same order). The order must be divided into two order items; see "Example for 5 identical motors".

Example for 5 identical motors

Order item	Quantity (items)	Article No.
1	1	**1LE1503-2CB23-4AB5-Z Z=Y53+E11+B10+B83** Plain text: **RAL 5007**
2	4	**1LE1503-2CB23-4AB5-Z Z=Y53+E11+B10** Plain text: **RAL 5007**

5

© Siemens AG 2015

Selection and ordering data

Special versions	Additional identification code **-Z** with order code and plain text if required	Motor category								
		Motor version	**Motor type (alum.)**	**Motor type – frame size**						
				80	**90**	**100**	**112**	**132**	**160**	**180**	**200**
		IE2 High Efficiency	1LE1001	**1LE1001**							
		IE3 Premium Efficiency	1LE1003	**1LE1003**							
		IE1 Standard Efficiency	1LE1002	**1LE1002**							
		IE4 Super Premium Efficiency	1LE1004			**1LE1004**					
		NEMA Energy Efficient	1LE1021	**1LE1021 Eagle Line**							
		NEMA Premium Efficient	1LE1023	**1LE1023 Eagle Line**							
		Pole-changing	1LE1011			**1LE1011**					
			1LE1012			**1LE1012**					
1LE10 . . - . . . . . - . . . . -Z	Order code	Motor version	Motor type	Frame size							
				80	90	100	112	132	160	180	200
Marine version – Basic version											
With type test certificate according to Germanischer Lloyd (GL), CT45 °C, temperature class 155 (F) utilized according to 155 (F)	**E11**	All	All	✓	✓	✓	✓	✓	✓	✓	✓
With type test certificate according to Lloyds Register (LR), CT45 °C, temperature class 155 (F), utilized according to 155 (F)	**E21**	All	All	✓	✓	✓	✓	✓	✓	✓	✓
With type test certificate according to Bureau Veritas (BV), CT45 °C, temperature class 155 (F), utilized according to 155 (F)	**E31**	All	All	✓	✓	✓	✓	✓	✓	–	–
With type test certificate according to Registro Italiano Navale (RINA), CT45 °C, temperature class 155 (F) utilized according to 155 (F)	**E41**	All	All	✓	✓	✓	✓	✓	✓	✓	✓
With type test certificate according to Russian Maritime Register (RS), CT45 °C, temperature class 155 (F) utilized according to 155 (F)	**E46**	All	All	✓	✓	✓	✓	✓	✓	✓	✓
With type test certificate according to Det Norske Veritas (DNV), CT45 °C, temperature class 155 (F) utilized according to 155 (F)	**E51**	All	All	✓	✓	✓	✓	✓	✓	✓	✓
With type test certificate according to American Bureau of Shipping (ABS), CT50 °C, temperature class 155 (F) utilized according to 155 (F)	**E52**	All	All	✓	✓	✓	✓	✓	✓	✓	✓
With type test certificate according to Korean Register of Shipping (KR), CT45 °C, temperature class 155 (F) utilized according to 155 (F)	**E54**	All	All	✓	✓	✓	✓	✓	✓	✓	✓
Marine version – Acceptance/certification											
Individual acceptance by marine classification society	**B10**	All	All	✓	✓	✓	✓	✓	✓	✓	✓
Type test with warm run for horizontal motors, with acceptance	**B83**	All	All	✓	✓	✓	✓	✓	✓	✓	✓

✓ With additional charge
– Not possible

© Siemens AG 2015

Selection and ordering data

Special versions	Additional identification code **-Z** with order code and plain text if required	Motor category													
		Motor version	**Motor type (cast-iron)**	**Motor type – frame size**											
				71	**80**	**90**	**100**	**112**	**132**	**160**	**180**	**200**	**225**	**250**	**280**	**315**
		IE2 High Efficiency	1LE1501	**1LE1501 Basic Line**												
			1LE1601				**1LE1601 Performance Line**									
		IE3 Premium Efficiency	1LE1503	**1LE1503 Basic Line**												
			1LE1603				**1LE1603 Performance Line**									
		IE4 Super Premium Efficiency	1LE1504				**1LE1504 Basic Line**									
			1LE1604				**1LE1604 Performance Line**									
		NEMA Energy Efficient	1LE1521				**1LE1521 Eagle Line Basic**									
			1LE1621				**1LE1621 Eagle Line Performance**									
		NEMA Premium Efficient	1LE1523				**1LE1523 Eagle Line Basic**									
			1LE1623				**1LE1623 Eagle Line Performance**									
1LE15 . . - . . . . . - . . . . -Z		Motor version	Motor type	Frame size												
1LE16 . . - . . . . . - . . . . -Z	Order code			71	80	90	100	112	132	160	180	200	225	250	280	315
Marine version – Basic version																
With type test certificate according to Germanischer Lloyd (GL), CT45 °C, temperature class 155 (F) utilized according to 155 (F)	**E11**	All	All	✓	✓	✓	✓	✓	✓	✓	✓	✓	✓	✓	✓	✓
With type test certificate according to Lloyds Register (LR), CT45 °C, temperature class 155 (F) utilized according to 155 (F)	**E21**	All	All	✓	✓	✓	✓	✓	✓	✓	✓	✓	✓	✓	✓	✓
With type test certificate according to Bureau Veritas (BV), CT45 °C, temperature class 155 (F) utilized according to 155 (F)	**E31**	All	All	✓	✓	✓	✓	✓	✓	✓	✓	✓	✓	✓	✓	✓
With type test certificate according to Registro Italiano Navale (RINA), CT45 °C, temperature class 155 (F) utilized according to 155 (F)	**E41**	All	All	✓	✓	✓	✓	✓	✓	✓	✓	✓	✓	✓	✓	✓
With type test certificate according to Russian Maritime Register (RS), CT45 °C, temperature class 155 (F) utilized according to 155 (F)	**E46**	All	All	✓	✓	✓	✓	✓	✓	✓	✓	✓	✓	✓	✓	✓
With type test certificate according to Det Norske Veritas (DNV), CT45 °C, temperature class 155 (F) utilized according to 155 (F)	**E51**	All	All	✓	✓	✓	✓	✓	✓	✓	✓	✓	✓	✓	✓	✓
With type test certificate according to American Bureau of Shipping (ABS), CT50 °C, temperature class 155 (F) utilized according to 155 (F)	**E52**	All	All	✓	✓	✓	✓	✓	✓	✓	✓	✓	✓	✓	✓	✓
With type test certificate according to Korean Register of Shipping (KR), CT45 °C, temperature class 155 (F) utilized according to 155 (F)	**E54**	All	All	✓	✓	✓	✓	✓	✓	✓	✓	✓	✓	✓	✓	✓
Marine version – Acceptance/certification																
Individual acceptance by marine classification society	**B10**	All	All	✓	✓	✓	✓	✓	✓	✓	✓	✓	✓	✓	✓	✓
Type test with warm run for horizontal motors, with acceptance	**B83**	All	All	✓	✓	✓	✓	✓	✓	✓	✓	✓	✓	✓	✓	✓

✓ With additional charge

© Siemens AG 2015

Selection and ordering data

Special versions	Additional identification code **-Z** with order code and plain text if required	Motor category												
		Motor version	**Motor type (alum./ cast-iron)**	**Motor type – frame size**										
				80	**90**	**100**	**112**	**132**	**160**	**180**	**200**	**225**	**250**	**280**	**315**
		Ex t (Zone 21/22) Ex n (Zone 2) IE1 Standard Efficiency	1MB10.2	**1MB10.2**											
		Ex t (Zone 21/22) Ex n (Zone 2) IE2 High Efficiency	1MB10.1	**1MB10.1**											
		Ex t (Zone 21/22) Ex n (Zone 2) IE3 Premium Efficiency	1MB10.3	**1MB10.3**											
		Ex t (Zone 21/22) Ex n (Zone 2) IE2 High Efficiency	1MB15.1 1MB16.1			**1MB15.1** **1MB16.1**									
		Ex t (Zone 21/22) Ex n (Zone 2) IE3 Premium Efficiency	1MB15.3 1MB16.3			**1MB15.3** **1MB16.3**									
1MB1. . . - . . . . . - . . . . -Z	Order code	Motor version	Motor type	Frame size											
				80	90	100	112	132	160	180	200	225	250	280	315
Marine version – Basic version															
With type test certificate according to Germanischer Lloyd (GL), CT45 °C, temperature class 155 (F) utilized according to 155 (F)	**E11**	All	All	✓	✓	✓	✓	✓	✓	✓	✓	✓	✓	✓	✓
With type test certificate according to Lloyds Register (LR), CT45 °C, temperature class 155 (F) utilized according to 155 (F)	**E21**	All	All	✓	✓	✓	✓	✓	✓	✓	✓	✓	✓	✓	✓
With type test certificate according to Bureau Veritas (BV), CT45 °C, temperature class 155 (F) utilized according to 155 (F)	**E31**	All	All	✓	✓	✓	✓	✓	✓	✓	✓	✓	✓	✓	✓
With type test certificate according to Registro Italiano Navale (RINA), CT45 °C, temperature class 155 (F) utilized according to 155 (F)	**E41**	All	All	✓	✓	✓	✓	✓	✓	✓	✓	✓	✓	✓	✓
With type test certificate according to Russian Maritime Register (RS), CT45 °C, temperature class 155 (F) utilized according to 155 (F)	**E46**	All	All	✓	✓	✓	✓	✓	✓	✓	✓	✓	✓	✓	✓
With type test certificate according to Det Norske Veritas (DNV), CT45 °C, temperature class 155 (F) utilized according to 155 (F)	**E51**	All	All	✓	✓	✓	✓	✓	✓	✓	✓	✓	✓	✓	✓
With type test certificate according to American Bureau of Shipping (ABS), CT50 °C, temperature class 155 (F) utilized according to 155 (F)	**E52**	All	All	✓	✓	✓	✓	✓	✓	✓	✓	✓	✓	✓	✓
With type test certificate according to Korean Register of Shipping (KR), CT45 °C, temperature class 155 (F) utilized according to 155 (F)	**E54**	All	All	✓	✓	✓	✓	✓	✓	✓	✓	✓	✓	✓	✓
Marine version – Acceptance/certification															
Individual acceptance by marine classification society	**B10**	All	All	✓	✓	✓	✓	✓	✓	✓	✓	✓	✓	✓	✓
Type test with warm run for horizontal motors, with acceptance	**B83**	All	All	✓	✓	✓	✓	✓	✓	✓	✓	✓	✓	✓	✓

✓ With additional charge

© Siemens AG 2015

Overview

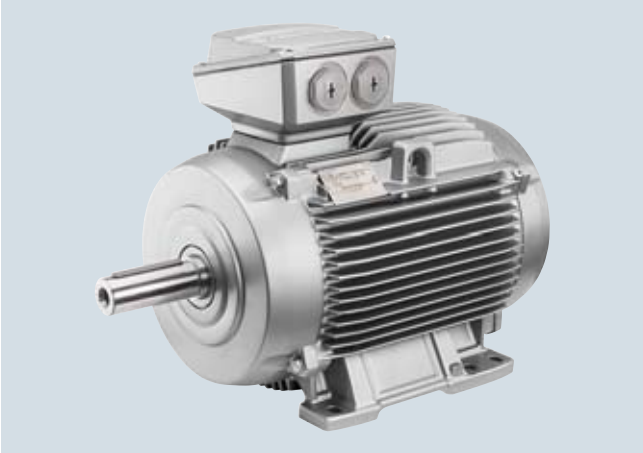

Motors deployed in steel rolling mills and other metal-processing sectors must be capable of operating under diverse electrical conditions, but must also withstand high mechanical stresses.

The analysis of plant-specific requirements can be divided into two parts.

The first part includes duty with typical reversing operation under conditions of extreme mechanical stress and very high temperatures. 1LP3 roller table motors must be deployed for this purpose. Modern transport roller tables and work roller tables situated close to roll stands in rolling mills are now equipped with directly driven reversing rollers.

The second part includes the downstream applications such as slab furnace feed, cooling line, reheating furnace, straightening machines and slitting lines in which the mechanical stresses are significantly lower. These are the applications for which the new steel plant motors have been designed by Siemens. These motors are available for direct-on-line operation (DOL) in efficiency class IE3, and as variants optimized for converter operation (VSD).

Whether a steel plant or roller table motor is selected depends on stress factors and the decision as to which motor type is suitable must be taken by the customer (ordering party).

Benefits

The steel plant motors offer the user a number of advantages and benefits:

- Highly efficient in efficiency class IE3 for direct-on-line operation (DOL)
- Highly efficient motors for converter operation
- Cast-iron versions for corrosive ambient conditions, in corrosivity class C3 (IEC 12944-2)
- Increased corrosion protection using specially designed paint finishes is available
- Self-ventilated motors for direct-on-line operation (DOL) 1PC1433 with efficiency class IE3
- Self-ventilated motors 1PC1443 for converter operation (VSD) on SINAMICS S120
- Naturally cooled motors 1PC1463 in enclosed version, without external fan, for converter operation (VSD) on SINAMICS S120
- Motors are designed to withstand vibration and shocks to Class 3M4 according to EN 60721-3-3 (approx. 10G incl. 10 shocks/min)
- Simple to commission in combination with a SINAMICS S120 converter
- In depth know-how with respect to plant-specific designs
- Worldwide service network with 24 hour service hotline for motors and converters
- High resistance to peak transient torques $T_B = 3 \cdot T_{rated}$
- Naturally cooled.

© Siemens AG 2015

Orientation

Application

Steel plant motors have been specially designed for metal production applications. They are capable of withstanding exceptionally high mechanical stresses caused by vibration and shocks. Their primary applications include the transport of steel or aluminum, and the transport of semi-finished products to cooling or heating systems, or to metal sheet and foil coilers.





Steel plant motors – transport material for coiling

Siemens roller table motors with "ring-rib" design must be used for reversing rolling operation in the "hot zone" (close to the roll stands) in extremely polluted atmospheres with severe continuous vibrations combined with continuous shocks.



Application for roller table motor

Applications in a typical steel plant

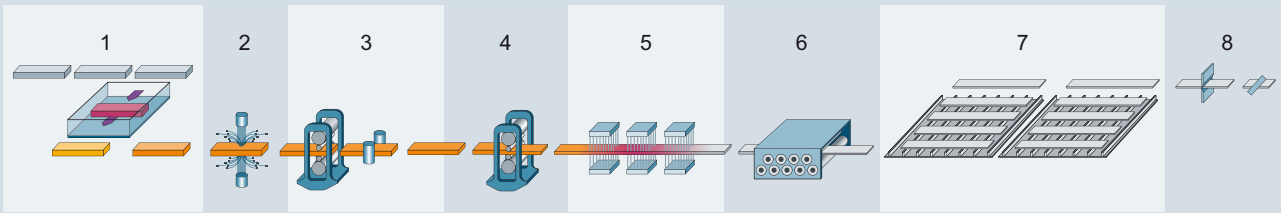

Area		Drive solutions
1	Slab furnace feed and reheating furnace	Steel plant motors
2	Descaling and slab transport	Steel plant motors
3	Roughing stand with edger	Roller-table motors
4	Finishing stand	Roller-table motors
5	Cooling line	Steel plant motors
6	Hot/cold straightening machine	Steel plant motors
7	Cooling table	SIMOTICS SD motors
8	Slitting line and adjustment	Steel plant motors

© Siemens AG 2015

Technical specifications

Housing design

Steel plant motors have a low-vibration, cast-iron housing in longitudinal-rib design and bearing plates with special vibration-damping action.

Bearings

Optimized bearing systems have been developed to ensure safe, fault-free operation of the motors when they are subjected to the combined effects of vibration and shocks. The motors are equipped as standard with bearings of series 63. The bearing at the drive end is always a located bearing, while the bearing arrangement is preloaded at the non-drive end.

Bearing plates

Bearing plates are installed on both sides and are designed in terms of their form and material to withstand the high mechanical stresses defined for category 3M4 (EN 60721-3-3). It is absolutely essential that the actual stresses associated with the application are taken into account in these design data. Verification of the design must be requested in special cases.

Electrical design

Motor type 1PC1433 can be ordered in all standard voltage variants, see Selection and ordering data.

Motor types 1PC1443 and 1PC1463 have been specially developed for converter operation. The standard version of these motors is designed for a rated voltage of 400 V, other voltages are optionally available.

Type of connection

Frame sizes 112 M to 160 L: Star (neutral point in winding overhang)

Frame sizes 180 L to 280 M: Delta

Insulation

All motors are fitted with the DURIGNIT IR 2000 insulation system in temperature class 155 (F). Utilization of the motors for line operation corresponds to temperature class 130 (B) at rated output and in line operation, and to temperature class 155 (F) with converter operation.

The variants for converter operation are optimized for use with SINAMICS S120 converters. The motors are fitted with special insulation to ensure that they can operate without restriction in four-quadrant operation on SINAMICS S120 converters (incl. Active Line Module) up to a maximum line voltage of 480 V.

Motor connection

The standard terminal box from the basic motor series 1LE15 is also used for steel plant motors. The terminal box position can be freely selected. Larger terminal boxes are optionally available.

All steel plant motors generally have an external grounding terminal.

Foot design

Motor construction types with feet and terminal box at the top have cast feet.

With motor construction types with feet and terminal box on the RHS/LHS, the feet are screwed on with frame sizes 112 to 200, and cast with frame sizes 225 to 280.

Winding temperature monitoring

Standard version of motor 1PC1433 for line operation has no PTC thermistors, but these can be optionally fitted.

The standard versions of motor types 1PC1443 and 1PC1463 specially designed for converter operation are equipped with PTC thermistors for alarm and tripping. Alternatively, the temperature is detected by one or two KTY84-130 sensors (which replace the PTC thermistors).

Paint finish

Special finish in RAL 7030, corrosivity class C3 according to IEC 12944-2 is provided as standard.

Other colors and finishes are optionally available.

Degree of protection

These correspond to the protection classes specified in the catalog for basic motor series 1LE15. With IP56, icing must be avoided.

Higher coolant temperatures

Coolant temperatures that exceed CT 40 °C require derating in accordance with the following table:

	Coolant temperature CT			
	40 °C	45 °C	50 °C	55 °C
Temperature class 155 (F) used according to 130 (B)				
Derating factor for line operation	1.00	0.96	0.92	0.87

5

© Siemens AG 2015

Technical specifications (continued)

Overview of technical specifications

This table lists the most important technical specifications. For more information and details, see Catalog Section 1 "Introduction".

Characteristic	Steel plant motors		
	1PC1433 (TEFC, DOL, IC411)	1PC1443 (TEFC, VSD,IC411)	1PC1463 (TENV, VSD, IC410)
Version	Motor for line operation, self-ventilated	Motor for converter operation, self-ventilated	Motor for converter operation, naturally cooled without external fan, enclosed version
Housing	Cast iron		
Number of poles	4, 6		
Efficiency class	IE3 (Premium Efficiency)	– (no IE class for converter motors)	
Frame sizes	112 M … 280 L		
Rated output	1 … 38 kW		
Torque	Approx. 26 … 578 Nm		Approx. 20 … 340 Nm
Rated speed	4-pole: 1500 rpm (50 Hz)/ 1800 rpm (60 Hz) 6-pole: 1000 rpm (50 Hz)/ 1200 rpm (60 Hz)	4-pole: 1500 rpm (50 Hz)/1800 rpm (60 Hz)/ 2610 rpm (87 Hz) 6-pole: 1000 rpm (50 Hz)/1200 rpm (60 Hz)/ 1740 rpm (87 Hz)	
Voltage	Standard motor input voltage: 400 V (50 Hz), other voltages optionally available	Standard motor input voltage: 400 V (50 Hz), insulation strength for operation on frequency converter up to 500 V,	
Standard voltages	50 Hz: 230 V, 400 V, 500 V, 690 V 60 Hz: 460 V		
Frequencies	50 Hz, 60 Hz	50 … 87 Hz	
Certificates	DE, GOST-R		
Marking	IEC 60034-30		
Temperature class	155 (F) utilized according to 130 (B)	155 (F) utilized according to 155 (F)	
Insulation according to EN 60034-1	Temperature class 155 (F), Durignit IR2000		
Degree of protection acc. to EN 60034-5	Standard IP55, optionally IP56 and IP65		
Cooling method	Self-ventilated (IC411))		Naturally cooled without external fan, enclosed version (IC410)
Permissible coolant temperature	Standard –20 … 40 °C		
Types of construction acc. to EN 60034-7	IM B3, IM B5, IM V1, IM V3, IM B35		
Finish (climate group according to IEC 60721)	RAL 7030, class C3 as standard		
Vibration quantity level acc. to EN 60034-14	Level A or B optionally available		
Shaft extension in accordance with DIN 748	Half-key balancing as standard		
Sound pressure level according to EN ISO 1680 (tolerance +3 dB)	The sound pressure level is listed in the "Selection and ordering data" for the required motor.		
Weights	The weight is listed in the "Selection and ordering data" for the required motor.		
Modular mounting concept	Encoder, brake, separately driven fan optional		
Consistent series concept	• Cast housing feet, screwed-on feet optional • Terminal box obliquely partitioned and rotatable through 4 × 90° • Bearings of series 63 at both ends as standard		
Options	See "Article No. supplements and special versions".		

© Siemens AG 2015

Technical specifications (continued)

Examples of rating plates

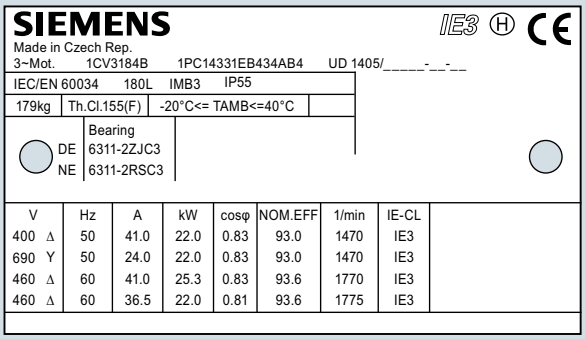

Motor 1PC1433 for line operation, self-ventilated with efficiency class IE3 (Premium Efficiency)

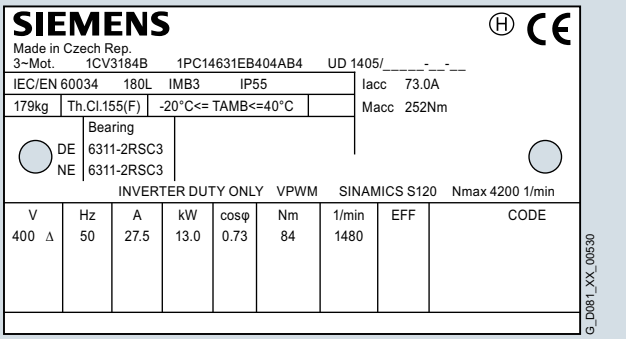

Motor 1PC1463 for converter operation, naturally cooled without external fan, enclosed version

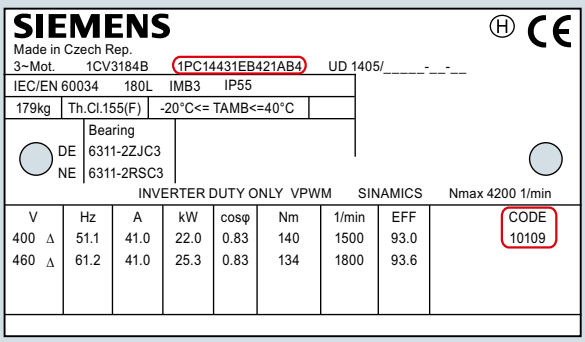

Motor 1PC1443 for converter operation, self-ventilated

The self-ventilated motors 1PC1443 also have the motor code for simple commissioning on SINAMICS S120 converters.

© Siemens AG 2015

Technical specifications (continued)

Torque/frequency characteristics

1PC1463, 4-pole

Type	Frequency *f* Hz					
	10	**20**	**30**	**40**	**50**	**60**
	Torque *T* Nm					
1PC1463-1BB20-2	23.0	23.0	22.0	21.0	20.0	16.9
1PC1463-1CB00-2	35.0	35.0	33.0	32.0	31.0	26.2
1PC1463-1CB20-2	44.0	44.0	43.0	41.0	39.0	33.0
1PC1463-1DB40-2	57.0	57.0	56.0	54.0	51.0	42.3
1PC1463-1DB60-2	67.0	67.0	66.0	63.0	60.0	48.2
1PC1463-1EB20-4	80.0	80.0	77.0	74.0	71.0	59.0
1PC1463-1EB40-4	103.0	103.0	96.0	91.0	84.0	69.9

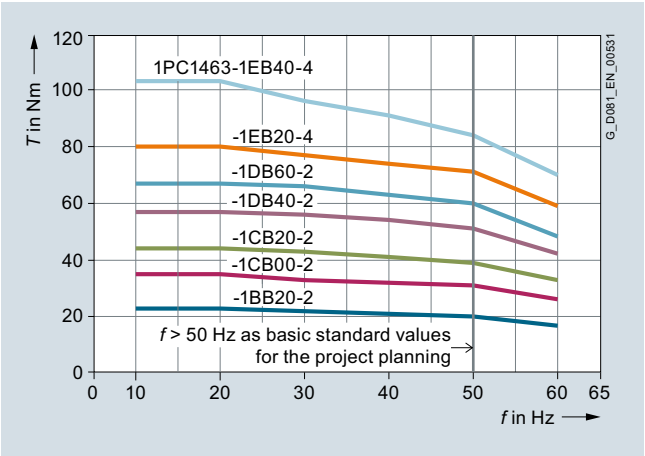

1PC1463, 6-pole

Type	Frequency *f* Hz					
	10	**20**	**30**	**40**	**50**	**60**
	Torque *T* Nm					
1PC1463-1EC40-4	100.0	100.0	95.0	90.0	82.0	70.0
1PC1463-2AC50-4	170.0	170.0	160.0	150.0	140.0	117.0
1PC1463-2BC23-4	247.0	247.0	233.0	221.0	203.0	169.0
1PC1463-2CC23-4	289.0	289.0	277.0	263.0	241.0	201.0
1PC1463-2DC03-4	351.0	351.0	331.0	314.0	288.0	240.0
1PC1463-2DC23-4	422.0	422.0	398.0	377.0	346.0	288.0

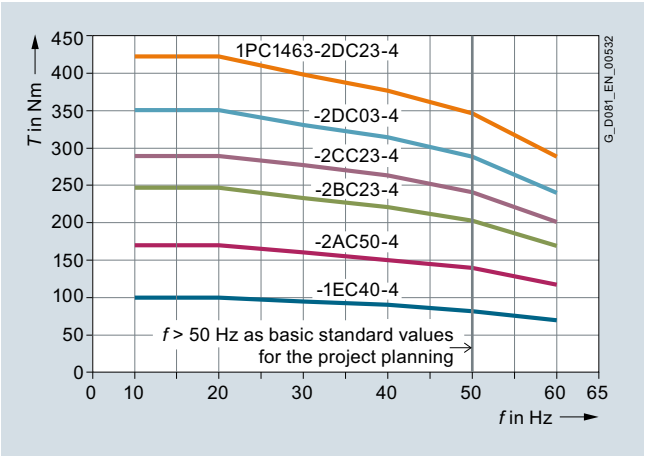

5

© Siemens AG 2015

Selection and ordering data

P_{rated}, 50 Hz	P_{rated}, 60 Hz	Frame size	Operating values at rated output: n_{rated}, 50 Hz	T_{rated}, 50 Hz	IE class	η_{rated}, 50 Hz, 4/4	η_{rated}, 50 Hz, 3/4	η_{rated}, 50 Hz, 2/4	cos φ_{rated}, 50 Hz, 4/4	I_{rated}, 50 Hz, 400 V	T_{LR}/T_{rated} 50 Hz	I_{LR}/I_{rated} 50 Hz	T_B/T_{rated} 50 Hz	L_{pfA}, 50 Hz	L_{WA}, 50 Hz	Cast-iron series 1PC1433 – IE3 version acc. to IEC 60034-30 Article No.	$m_{IM\ B3}$	J	Torque class
kW	kW	FS	rpm	Nm		%	%	%		A				dB(A)	dB(A)	▲ New	kg	kgm²	CL
• Cooling: self-ventilated (IC411)) • Efficiency: IE3 Premium Efficiency, service factor (SF) 1.15 • Insulation: thermal class 155 (temperature class F), IP55 degree of protection, utilization in accordance with thermal class 130 (temperature class B)																			
4-pole: 1500 rpm at 50 Hz, 1800 rpm at 60 Hz																			
4	4.55	112 M	1460	26	IE3	88.6	88.6	87.6	0.82	7.9	2.4	7.1	3.7	58	70	▲1PC1433-1BB2■-■■■■	47	0.017	16
5.5	6.3	132 S	1470	35.7	IE3	89.6	89.6	88.6	0.84	10.5	2.1	7.2	3.4	64	76	▲1PC1433-1CB0■-■■■■	75	0.046	16
7.5	8.6	132 M	1470	48.7	IE3	90.4	90.4	89.4	0.84	14.3	2.4	7.4	3.5	64	76	▲1PC1433-1CB2■-■■■■	83	0.046	16
11	12.6	160 M	1475	71	IE3	91.4	91.4	90.4	0.84	20.5	2.2	6.9	3.2	65	77	▲1PC1433-1DB2■-■■■■	116	0.083	16
15	17.3	160 L	1475	97	IE3	92.1	92.1	91.1	0.82	28.5	2.5	8.5	3.8	65	77	▲1PC1433-1DB4■-■■■■	135	0.099	16
18.5	21.3	180 M	1470	120	IE3	92.6	93.2	93.2	0.82	35	2.5	7.2	3.3	66	73	▲1PC1433-1EB2■-■■■■	172	0.13	16
22	25.3	180 L	1470	143	IE3	93.0	93.7	93.7	0.83	41	2.3	6.8	3.3	68	75	▲1PC1433-1EB4■-■■■■	182	0.14	16
30	34.5	200 L	1470	195	IE3	93.6	94.3	94.4	0.84	55	2.6	7.3	3.1	65	72	▲1PC1433-2AB5■-■■■■	246	0.22	16
37	42.5	225 S	1478	239	IE3	93.9	94.5	94.4	0.86	66	2.5	6.4	2.7	65	78	▲1PC1433-2BB0■-■■■■	295	0.42	16
45	52	225 M	1478	291	IE3	94.2	94.9	95.1	0.86	80	2.6	6.4	2.7	65	78	▲1PC1433-2BB2■-■■■■	330	0.47	16
55	63	250 M	1482	354	IE3	94.6	95.1	95.0	0.87	96	2.5	6.8	2.9	66	79	▲1PC1433-2CB2■-■■■■	430	0.85	16
75	86	280 S	1485	482	IE3	95.0	95.3	95.0	0.86	133	2.5	6.9	3.0	69	83	▲1PC1433-2DB0■-■■■■	580	1.39	16
90	104	280 M	1485	579	IE3	95.2	95.5	95.3	0.87	157	2.6	7.2	3.0	70	84	▲1PC1433-2DB2■-■■■■	680	1.7	16
6-pole: 1000 rpm at 50 Hz, 1200 rpm at 60 Hz																			
2.2	2.55	112 M	970	22	IE3	84.3	85.1	83.8	0.75	5	2.2	5.6	2.8	65	74	▲1PC1433-1BC2■-■■■■	48	0.017	13
3	3.45	132 S	975	29	IE3	85.6	87.5	87	0.77	6.6	1.6	5.3	2.4	63	75	▲1PC1433-1CC0■-■■■■	71	0.029	13
4	4.55	132 M	975	39	IE3	86.8	88.1	87.9	0.77	8.6	1.7	5.6	2.5	63	75	▲1PC1433-1CC2■-■■■■	71	0.037	13
5.5	6.3	132 M	975	54	IE3	88	89	88.8	0.77	11.7	1.8	5.7	2.6	63	75	▲1PC1433-1CC3■-■■■■	84	0.046	13
7.5	8.6	160 M	980	73	IE3	89.1	89.9	89.3	0.76	16	1.9	4.9	2.3	67	79	▲1PC1433-1DC2■-■■■■	128	0.098	13
11	12.6	160 L	975	108	IE3	90.3	91.1	90.7	0.77	23	1.9	5	2.3	67	79	▲1PC1433-1DC4■-■■■■	153	0.12	13
15	18	180 L	975	147	IE3	91.2	91.9	91.9	0.8	29.5	2.3	5.9	2.8	61	68	▲1PC1433-1EC4■-■■■■	169	0.19	16
18.5	22	200 L	978	181	IE3	91.7	92.5	92.5	0.79	37	2.5	5.6	2.6	64	71	▲1PC1433-2AC4■-■■■■	221	0.28	16
22	26.5	200 L	978	215	IE3	92.2	93	92.9	0.79	43.5	2.5	5.6	2.6	61	68	▲1PC1433-2AC5■-■■■■	236	0.32	16
30	36	225 M	982	292	IE3	92.9	93.6	93.5	0.83	56	2.6	6.6	3	64	77	▲1PC1433-2BC2■-■■■■	330	0.67	16
37	44.5	250 M	985	359	IE3	93.3	94	94	0.85	67	2.7	7	2.9	62	75	▲1PC1433-2CC2■-■■■■	415	1	16
45	54	280 S	988	435	IE3	93.7	94.3	94.2	0.85	82	3	6.8	2.8	60	74	▲1PC1433-2DC0■-■■■■	520	1.4	16
55	66	280 M	988	532	IE3	94.1	94.6	94.4	0.85	99	3.2	7.2	3	60	74	▲1PC1433-2DC2■-■■■■	570	1.6	16

Voltages				No. of poles	Frame size	Motor type	Version				Order code(s)
50 Hz	230 VΔ/400 VY	60 Hz [1]	460 VY	4, 6	112 M ... 280 M	1PC1433-1B … -2D	**Standard**	2	2		–
50 Hz	400 VΔ/690 VY	60 Hz [1]	460 VΔ	4, 6	112 M ... 280 M	1PC1433-1B … -2D	**Standard**	3	4		–
50 Hz	500 VY			4, 6	112 M ... 280 M	1PC1433-1B … -2D	Without add. charge	2	7		–
50 Hz	500 VΔ			4, 6	112 M ... 280 M	1PC1433-1B … -2D	Without add. charge	4	0		–
Further voltages [1]		For price information, code numbers, order codes and descriptions, see Page 5/61						9	0		. . .
Types of construction				No. of poles	Frame size	Motor type	Version				Order code(s)
Without flange		IM B3 [2]		4, 6	112 M ... 280 M	1PC1433-1B … -2D	**Standard**			A	–
With flange		IM B5 [2]		4, 6	112 M ... 280 M	1PC1433-1B … -2D	With additional charge			F	–
Further types of construction		For price information, code letters and descriptions, see Page 5/62								■	. . .
Motor protection				No. of poles	Frame size	Motor type	Version				Order code(s)
PTC thermistor with 3 temperature sensors				4, 6	112 M ... 280 M	1PC1433-1B … -2D	With additional charge			B	–
Further motor protection		For price information, code letters and descriptions, see Page 5/63								■	. . .
Terminal box position				No. of poles	Frame size	Motor type	Version				Order code(s)
Terminal box at top				4, 6	112 M ... 280 M	1PC1433-1B … -2D	**Standard**			4	–
Further terminal box positions		For price information, code numbers and descriptions, see Page 5/64									
Special versions				No. of poles	Frame size	Motor type					Order code(s)
Options		For price information, order codes and descriptions, see from Page 5/65					**1PC1433-. . . .■-■■■■-Z**				. . .+. . .+. . .+. . .

[1] Operating values at rated output for 60 Hz are stored in the Drive Technology (DT) Configurator.

[2] Types derived from IM B3 (IM B6/7/8, IM V6 and IM V5), from IM B5 (IM V3 and IM V1) and from IM B14 (IM V19 and IM V18) are possible, provided that no requirement exists for stamping of the type on the rating plate. The basic type IM B3, IM B5 or IM B14 is stamped as standard on the rating plate. If mounted in a different position, the position must be specified to ensure that the condensation drainage holes are positioned correctly.

© Siemens AG 2015

Motors for converter operation · Cast-iron series 1PC1443 self-ventilated – line voltage 400 V/50 Hz, 440 V/60 Hz

Selection and ordering data

P_{rated}, 50 Hz	P_{rated}, 60 Hz	Frame size	Connection	Operating values at rated output f_{rated}	T_{rated}	η_{rated}, 4/4 in converter operation	$\cos\varphi_{rated,\ 4/4}$	I_{rated}	Cast-iron series 1PC1443 – version specifically for converter operation
kW	kW	FS		Hz	Nm	%		A	Article No.
• Cooling: self-ventilated (IC 411) • Insulation: thermal class 155 (temperature class F), IP55 degree of protection, utilization in accordance with thermal class 155 (temperature class F) • Operation on a converter with uncontrolled infeed – SINAMICS S; rated voltage 400 V/50 Hz, 440 V/60 Hz									
4-pole: 1500 rpm at 50 Hz, 1800 rpm at 60 Hz									
4		112 M	Y	51.4	25.5	88.6	0.82	7.9	1PC1443-1BB2 . - . . . .
	4.55		Y	61.4	24.1	89.5	0.83	7.7	
5.5		132 S	Y	51.0	35.0	89.6	0.82	10.8	1PC1443-1CB0 . - . . . .
	6.3		Y	61.0	33.4	91.7	0.83	10.4	
7.5		132 M	Y	51.0	47.7	90.4	0.84	14.3	1PC1443-1CB2 . - . . . .
	8.6		Y	61.0	45.6	91.7	0.85	13.8	
11		160 M	Y	50.9	70.0	91.4	0.84	20.5	1PC1443-1DB2 . - . . . .
	12.6		Y	60.9	67.0	92.4	0.85	20.0	
15		160 L	Y	50.7	96.0	92.1	0.82	28.5	1PC1443-1DB4 . - . . . .
	17.5		Y	60.8	93.0	93.6	0.83	28.0	
18.5		180 M	Δ	51.0	118.0	92.6	0.82	35.0	1PC1443-1EB2 . - . . . .
	21.3		Δ	61.0	113.0	93.6	0.83	34.5	
22		180 L	Δ	51.1	140.0	93.0	0.83	41.0	1PC1443-1EB4 . - . . . .
	25.3		Δ	61.2	134.0	93.6	0.83	41.0	
30		200 L	Δ	50.9	191.0	93.6	0.84	55.0	1PC1443-2AB5 . - . . . .
	34.5		Δ	60.9	183.0	93.0	0.85	55.0	
37		225 S	Δ	50.7	236.0	93.9	0.86	66.0	1PC1443-2BB0 . - . . . .
	42.5		Δ	60.8	225.0	93.6	0.86	66.0	
45		225 M	Δ	50.8	286.0	94.2	0.86	80.0	1PC1443-2BB2 . - . . . .
	52		Δ	60.8	276.0	94.1	0.86	81.0	
55		250 M	Δ	50.6	350.0	94.6	0.87	96.0	1PC1443-2CB2 . - . . . .
	63		Δ	60.6	334.0	94.1	0.87	97.0	
75		280 S	Δ	50.5	477.0	95.0	0.86	133.0	1PC1443-2DB0 . - . . . .
	86		Δ	60.5	456.0	94.5	0.87	131.0	
90		280 M	Δ	50.5	573.0	95.2	0.87	157.0	1PC1443-2DB2 . - . . . .
	104		Δ	60.5	552.0	95.0	0.87	158.0	
6-pole: 1000 rpm at 50 Hz, 1200 rpm at 60 Hz									
2.2		112 M	Y	51.6	21.0	84.3	0.75	4.7	1PC1443-1BC2 . - . . . .
	2.55		Y	61.6	20.3	87.5	0.77	4.75	
3		132 S	Y	51.0	28.7	85.6	0.76	6.7	1PC1443-1CC0 . - . . . .
	3.45		Y	61.0	27.5	89.5	0.77	6.3	
4		132 M	Y	51.2	38.2	86.8	0.77	8.6	1PC1443-1CC2 . - . . . .
	4.55		Y	61.2	36.2	89.5	0.78	8.2	
5.5		132 M	Y	51.2	53.0	88.0	0.78	11.6	1PC1443-1CC3 . - . . . .
	6.3		Y	61.2	50.0	91.0	0.78	11.1	
7.5		160 M	Y	51.1	72.0	89.1	0.76	16.0	1PC1443-1DC2 . - . . . .
	8.6		Y	61.1	68.0	91.0	0.76	15.6	
11		160 L	Y	51.1	105.0	90.3	0.77	23.0	1PC1443-1DC4 . - . . . .
	12.6		Y	61.1	100.0	91.7	0.77	22.5	
15		180 L	Δ	51.4	143.0	91.2	0.80	29.5	1PC1443-1EC4 . - . . . .
	18		Δ	61.4	143.0	91.7	0.81	30.5	
18.5		200 L	Δ	51.2	176.0	91.7	0.79	37.0	1PC1443-2AC4 . - . . . .
	22		Δ	61.2	175.0	91.7	0.80	37.5	
22		200 L	Δ	51.3	210.0	92.2	0.79	43.5	1PC1443-2AC5 . - . . . .
	26.5		Δ	61.4	211.0	93.0	0.81	26.5	
30		225 M	Δ	51.0	286.0	92.9	0.83	56.0	1PC1443-2BC2 . - . . . .
	36		Δ	61.1	286.0	93.0	0.84	58.0	
37		250 M	Δ	50.8	353.0	93.3	0.85	67.0	1PC1443-2CC2 . - . . . .
	44.5		Δ	60.9	354.0	93.6	0.86	69.0	
45		280 S	Δ	50.6	430.0	93.7	0.85	82.0	1PC1443-2DC0 . - . . . .
	54		Δ	60.6	430.0	93.6	0.86	84.0	
55		280 M	Δ	50.6	525.0	94.1	0.85	99.0	1PC1443-2DC2 . - . . . .
	66		Δ	60.7	525.0	94.1	0.85	104.0	

All technical specifications refer to converter operation.

*) In addition to the Power Module, a Control Unit and an Operator Panel are required (see Catalog D 31 and/or D 35).

© Siemens AG 2015

Selection and ordering data (continued)

Motor type	$m_{IM\ B3}$	J	L_{pfA}, tolerance +3 dB(A) load	L_{WA}, tolerance +3 dB(A) load	Mech. speed limit	Terminal box type	**SINAMICS S120 PM240 is preferred** Other SINAMICS converters can also be used – Low overload duty type *)	Base-load current I_{CH}	Rated current I_{rated}	Single Motor Module booksize Width
	kg	kgm²	dB(A)	dB(A)	rpm		Type	A	A	mm
1PC1443-1BB2 . -	47	0.017	58.0	70.0	4200	TB1F01	6SL3210-1TE21-0AA3	7.7	9.0	50
	47	0.017	62.0	74.0	4200		6SL3210-1TE21-0AA3	7.7	9.0	50
1PC1443-1CB0 . -	75	0.034	64.0	76.0	4200	TB1H01	6SL3210-1TE21-8AA3	15.3	18.0	50
	75	0.034	68.0	80.0	4200		6SL3210-1TE21-8AA3	15.3	18.0	50
1PC1443-1CB2 . -	83	0.046	64.0	76.0	4200	TB1H01	6SL3210-1TE21-8AA3	15.3	18.0	50
	83	0.046	68.0	80.0	4200		6SL3210-1TE21-8AA3	15.3	18.0	50
1PC1443-1DB2 . -	116	0.083	65.0	77.0	4200	TB1J01	6SL3210-1TE23-0AA3	25.5	30.0	100
	116	0.083	69.0	81.0	4200		6SL3210-1TE23-0AA3	25.5	30.0	100
1PC1443-1DB4 . -	135	0.099	65.0	77.0	4200	TB1J01	6SL3210-1TE23-0AA3	25.5	30.0	100
	135	0.099	69.0	81.0	4200		6SL3210-1TE23-0AA3	25.5	30.0	100
1PC1443-1EB2 . -	172	0.13	66.0	73.0	4200	TB1J01	6SL3210-1TE24-5AA3	38.0	45.0	150
	172	0.13	68.0	75.0	4200		6SL3210-1TE24-5AA3	38.0	45.0	150
1PC1443-1EB4 . -	182	0.14	68.0	75.0	4200	TB1J01	6SL3210-1TE24-5AA3	38.0	45.0	150
	182	0.14	70.0	77.0	4200		6SL3210-1TE24-5AA3	38.0	45.0	150
1PC1443-2AB5 . -	246	0.22	65.0	72.0	4200	TB1L01	6SL3210-1TE26-0AA3	52.0	60.0	150
	246	0.22	67.0	74.0	4200		6SL3210-1TE26-0AA3	52.0	60.0	150
1PC1443-2BB0 . -	295	0.42	65.0	78.0	4500	TB1L01	6SL3210-1TE28-5AA3	68.0	85.0	200
	295	0.42	68.0	82.0	4500		6SL3210-1TE28-5AA3	68.0	85.0	200
1PC1443-2BB2 . -	330	0.47	65.0	78.0	4500	TB1L01	6SL3210-1TE28-5AA3	68.0	85.0	200
	330	0.47	68.0	82.0	4500		6SL3210-1TE28-5AA3	68.0	85.0	200
1PC1443-2CB2 . -	430	0.85	66.0	79.0	3700	TB1N01	6SL3210-1TE31-3AA3	105.0	132.0	300
	430	0.85	68.0	82.0	3700		6SL3210-1TE31-3AA3	105.0	132.0	300
1PC1443-2DB0 . -	580	1.39	69.0	83.0	3000	TB1N01	6SL3210-1TE32-0AA4	141.0	200.0	300
	580	1.39	77.0	91.0	3000		6SL3210-1TE32-0AA4	141.0	200.0	300
1PC1443-2DB2 . -	680	1.7	70.0	84.0	3000	TB1N01	6SL3210-1TE32-0AA4	141.0	200.0	300
	680	1.7	79.0	93.0	3000		6SL3210-1TE32-0AA4	141.0	200.0	300
1PC1443-1BC2 . -	48	0.017	65.0	74.0	3600	TB1F01	6SL3210-1TE15-0AA3	4.3	5.0	50
	48	0.017	65.0	77.0	3600		6SL3210-1TE15-0AA3	4.3	5.0	50
1PC1443-1CC0 . -	71	0.037	63.0	75.0	3600	TB1H01	6SL3210-1TE21-0AA3	7.7	9.0	50
	71	0.037	67.0	79.0	3600		6SL3210-1TE21-0AA3	7.7	9.0	50
1PC1443-1CC2 . -	71	0.037	63.0	75.0	3600	TB1H01	6SL3210-1TE21-0AA3	7.7	9.0	50
	71	0.037	67.0	79.0	3600		6SL3210-1TE21-0AA3	7.7	9.0	50
1PC1443-1CC3 . -	84	0.046	63.0	75.0	3600	TB1H01	6SL3210-1TE21-8AA3	15.3	18.0	50
	84	0.046	67.0	79.0	3600		6SL3210-1TE21-8AA3	15.3	18.0	50
1PC1443-1DC2 . -	128	0.098	67.0	79.0	3600	TB1J01	6SL3210-1TE21-8AA3	15.3	18.0	50
	128	0.098	70.0	82.0	3600		6SL3210-1TE21-8AA3	15.3	18.0	50
1PC1443-1DC4 . -	153	0.12	67.0	79.0	3600	TB1J01	6SL3210-1TE23-0AA3	25.5	30.0	100
	153	0.12	70.0	82.0	3600		6SL3210-1TE23-0AA3	25.5	30.0	100
1PC1443-1EC4 . -	169	0.19	61.0	68.0	3600	TB1J01	6SL3210-1TE23-0AA3	25.5	30.0	100
	169	0.19	61.0	68.0	3600		6SL3210-1TE23-0AA3	25.5	30.0	100
1PC1443-2AC4 . -	221	0.28	64.0	71.0	3600	TB1L01	6SL3210-1TE24-5AA3	38.0	45.0	150
	221	0.28	64.0	71.0	3600		6SL3210-1TE24-5AA3	38.0	45.0	150
1PC1443-2AC5 . -	236	0.32	61.0	68.0	3600	TB1L01	6SL3210-1TE24-5AA3	38.0	45.0	150
	236	0.32	63.0	70.0	3600		6SL3210-1TE24-5AA3	38.0	45.0	150
1PC1443-2BC2 . -	330	0.67	64.0	77.0	4400	TB1L01	6SL3210-1TE26-0AA3	52.0	60.0	150
	330	0.67	66.0	80.0	4400		6SL3210-1TE26-0AA3	52.0	60.0	150
1PC1443-2CC2 . -	415	1	62.0	75.0	3700	TB1N01	6SL3210-1TE28-5AA3	68.0	85.0	200
	415	1	63.0	76.0	3700		6SL3210-1TE28-5AA3	68.0	85.0	200
1PC1443-2DC0 . -	520	1.4	60.0	74.0	3000	TB1N01	6SL3210-1TE28-5AA3	68.0	85.0	200
	520	1.4	66.0	80.0	3000		6SL3210-1TE28-5AA3	68.0	85.0	200
1PC1443-2DC2 . -	570	1.6	60.0	74.0	3000	TB1N01	6SL3210-1TE31-3AA3	105.0	132.0	300
	570	1.6	66.0	80.0	3000		6SL3210-1TE31-3AA3	105.0	132.0	300

© Siemens AG 2015

Motors for converter operation · Cast-iron series 1PC1463 self-ventilated – line voltage 400 V/50 Hz, 440 V/60 Hz

Selection and ordering data

				Operating values at rated output											**Cast-iron series 1PC1463 –** version specifically for converter operation
P_{rated}, 50 Hz	P_{rated}, 60 Hz	Frame size	Con-nection	f_{rated}	T_{rated}	η_{rated}, 4/4 in converter operation	cos φ_{rated}, 4/4	I_{rated}	$m_{IM\ B3}$	J	L_{pfA}, tolerance +3 dB(A) load	L_{WA}, tolerance +3 dB(A) load	Mech. speed limit	Term-inal box type	
kW	kW	FS		Hz	Nm	%		A	kg	kgm^2	dB(A)	dB(A)	rpm		Article No.
• Cooling: Naturally cooled in enclosed version without external fan (IC 410) • Insulation: thermal class 155 (temperature class F), IP55 degree of protection, utilization in accordance with thermal class 155 (temperature class F) • Operation on a converter with uncontrolled infeed – SINAMICS S; rated voltage 400 V/50 Hz, 440 V/60 Hz															
4-pole: 1500 rpm at 50 Hz, 1800 rpm at 60 Hz															
3.1		**112 M**	Y	50.85	20.0	87.0	0.73	7.0	47	0.017	57	70	4200	TB1F01	**1PC1463-1BB2 . - . . . .**
	O. R.		O. R.	O. R.	O. R.	O. R.	O. R.	O. R.	O. R.	O. R.	O. R.	O. R.	O. R.		
4.8		**132 S**	Y	50.55	31	89.5	0.73	10.6	74	0.04	58	71	4200	TB1H01	**1PC1463-1CB0 . - . . . .**
	O. R.		O. R.	O. R.	O. R.	O. R.	O. R.	O. R.	O. R.	O. R.	O. R.	O. R.	O. R.		
6.1		**132 M**	Y	50.7	39	90.3	0.77	12.7	81	0.046	59	72	4200	TB1H01	**1PC1463-1CB2 . - . . . .**
	O. R.		O. R.	O. R.	O. R.	O. R.	O. R.	O. R.	O. R.	O. R.	O. R.	O. R.	O. R.		
8		**160 L**	Y	50.5	51	90.6	0.72	17.7	130	0.099	59	72	4200	TB1J01	**1PC1463-1DB4 . - . . . .**
	O. R.		O. R.	O. R.	O. R.	O. R.	O. R.	O. R.	O. R.	O. R.	O. R.	O. R.	O. R.		
9.3		**160 L**	Y	50.5	60	91.3	0.76	19.3	140	0.11	58	71	4200	TB1J01	**1PC1463-1DB6 . - . . . .**
	O. R.		O. R.	O. R.	O. R.	O. R.	O. R.	O. R.	O. R.	O. R.	O. R.	O. R.	O. R.		
11		**180 M**	Δ	50.6	71	92	0.73	23.5	170	0.13	59	72	4200	TB1J01	**1PC1463-1EB2 . - . . . .**
	O. R.		O. R.	O. R.	O. R.	O. R.	O. R.	O. R.	O. R.	O. R.	O. R.	O. R.	O. R.		
13		**180 L**	Δ	50.7	84	92.5	0.73	28	180	0.14	60	73	4200	TB1J01	**1PC1463-1EB4 . - . . . .**
	O. R.		O. R.	O. R.	O. R.	O. R.	O. R.	O. R.	O. R.	O. R.	O. R.	O. R.	O. R.		
6-pole: 1000 rpm at 50 Hz, 1200 rpm at 60 Hz															
8.5		**180 L**	Δ	50.8	82	90.1	0.66	20.5	165	0.19	56	69	3600	TB1J01	**1PC1463-1EC4 . - . . . .**
	O. R.		O. R.	O. R.	O. R.	O. R.	O. R.	O. R.	O. R.	O. R.	O. R.	O. R.	O. R.		
14.5		**200 L**	Δ	50.6	140	92.3	0.65	35	245	0.32	61	74	3600	TB1L01	**1PC1463-2AC5 . - . . . .**
	O. R.		O. R.	O. R.	O. R.	O. R.	O. R.	O. R.	O. R.	O. R.	O. R.	O. R.	O. R.		
21		**225 M**	Δ	50.55	203	92.8	0.71	46	330	0.67	63	76	4400	TB1L01	**1PC1463-2BC2 . - . . . .**
	O. R.		O. R.	O. R.	O. R.	O. R.	O. R.	O. R.	O. R.	O. R.	O. R.	O. R.	O. R.		
25		**250 M**	Δ	50.4	241	93.6	0.72	54	410	1	65	78	3700	TB1N01	**1PC1463-2CC2 . - . . . .**
	O. R.		O. R.	O. R.	O. R.	O. R.	O. R.	O. R.	O. R.	O. R.	O. R.	O. R.	O. R.		
30		**280 S**	Δ	50.35	288	93.8	0.73	64	510	1.4	74	85	3000	TB1N01	**1PC1463-2DC0 . - . . . .**
	O. R.		O. R.	O. R.	O. R.	O. R.	O. R.	O. R.	O. R.	O. R.	O. R.	O. R.	O. R.		
36		**280 M**	Δ	50.35	346	94.1	0.74	75	550	1.6	74	85	3000	TB1N01	**1PC1463-2DC2 . - . . . .**
	O. R.		O. R.	O. R.	O. R.	O. R.	O. R.	O. R.	O. R.	O. R.	O. R.	O. R.	O. R.		

All technical specifications refer to converter operation.

5

*) In addition to the Power Module, a Control Unit and an Operator Panel are required (see Catalog D 31 and/or D 35).

© Siemens AG 2015

Selection and ordering data

Voltages	Voltage code 12th and 13th position of the Article No.		Additional identification code with order code and plain text if required	Motor category								
				Motor version	**Motor type (cast-iron)**	**Motor type – frame size**						
						112	**132**	**160**	**180**	**200**	**225**	**250**	**280**
				TEFC (IC411)	1PC1433	**1PC1433 for direct-on-line operation (DOL) ①**							
					1PC1443	**1PC1443 for converter operation (VSD) ②**							
				TENV (IC410)	1PC1463	**1PC1463 for converter operation (VSD) ③**							
1PC14 . . - . . . . ■ - ■ . . .			Order code	Motor version	Motor type	Frame size							
						112	132	160	180	200	225	250	280
Voltage at 50 Hz or 60 Hz													
50 Hz 400 VY, 60 Hz 460 VY	0	2	–	Only applicable for ② and ③		□	□	□	–	–	–	–	–
50 Hz 230 VΔ/400 VY, 60 Hz 460 VY	2	2	–	Only applicable for ①		□	□	□	□	□	□	□	□
50 Hz 400 VΔ/690 VY, 60 Hz 460 VΔ [1]	3	4	–	Only applicable for ①		□	□	□	□	□	□	□	□
50 Hz 400 VΔ, 60 Hz 460 VΔ [1]	0	4	–	Only applicable for ② and ③		–	–	–	□	□	□	□	□
50 Hz 500 VY	2	7	–	Only applicable for ①		○	○	○	○	○	○	○	○
50 Hz 500 VΔ	4	0	–	Only applicable for ①		○	○	○	○	○	○	○	○
50 Hz 220 VΔ/380 VY, 60 Hz 440 VΔ	2	1	–	Only applicable for ①		✓	✓	✓	✓	✓	✓	✓	✓
50 Hz 380 VΔ/660 VY, 60 Hz 440 VΔ [1]	3	3	–	Only applicable for ①		✓	✓	✓	✓	✓	✓	✓	✓
50 Hz 380 VΔ [1]				Only applicable for ①		✓	✓	✓	✓	✓	✓	✓	✓
50 Hz 240 VΔ/415 VY, 60 Hz 480 VY	2	3	–	Only applicable for ①		✓	✓	✓	✓	✓	✓	✓	✓
50 Hz 415 VΔ, 60 Hz 480 VΔ	3	5	–	Only applicable for ①		✓	✓	✓	✓	✓	✓	✓	✓
Voltage at 60 Hz and required output													
220 VΔ/380 VY; 50 Hz output	9	0	**M2A**	Only applicable for ①		✓	✓	✓	✓	✓	✓	✓	✓
220 VΔ/380 VY; 60 Hz output [2]	9	0	**M1A**	Only applicable for ①		✓	✓	✓	✓	✓	✓	✓	✓
380 VΔ/660 VY; 50 Hz output [1]	9	0	**M2B**	Only applicable for ①		✓	✓	✓	✓	✓	✓	✓	✓
380 VΔ; 50 Hz output [1]				Only applicable for ①		✓	✓	✓	✓	✓	✓	✓	✓
380 VΔ/660 VY; 60 Hz output [1] [2]	9	0	**M1B**	Only applicable for ①		✓	✓	✓	✓	✓	✓	✓	✓
440 VY; 50 Hz output	9	0	**M2C**	Only applicable for ①		✓	✓	✓	✓	✓	✓	✓	✓
440 VY; 60 Hz output [2]	9	0	**M1C**	Only applicable for ①		✓	✓	✓	✓	✓	✓	✓	✓
440 VΔ; 50 Hz output	9	0	**M2D**	Only applicable for ①		✓	✓	✓	✓	✓	✓	✓	✓
440 VΔ; 60 Hz output [2]	9	0	**M1D**	Only applicable for ①		✓	✓	✓	✓	✓	✓	✓	✓
460 VY; 50 Hz output	9	0	**M2E**	Only applicable for ①		✓	✓	✓	✓	✓	✓	✓	✓
460 VY; 60 Hz output [2]	9	0	**M1E**	Only applicable for ①		○	○	○	○	○	○	○	○
460 VΔ; 50 Hz output	9	0	**M2F**	Only applicable for ①		✓	✓	✓	✓	✓	✓	✓	✓
460 VΔ; 60 Hz output [2]	9	0	**M1F**	Only applicable for ①		○	○	○	○	○	○	○	○
575 VY; 50 Hz output	9	0	**M2G**	Only applicable for ①		✓	✓	✓	✓	✓	✓	✓	✓
575 VY; 60 Hz output [2]	9	0	**M1G**	Only applicable for ①		✓	✓	✓	✓	✓	✓	✓	✓
575 VΔ; 50 Hz output	9	0	**M2H**	Only applicable for ①		✓	✓	✓	✓	✓	✓	✓	✓
575 VΔ; 60 Hz output [2]	9	0	**M1H**	Only applicable for ①		✓	✓	✓	✓	✓	✓	✓	✓
Non-standard voltage and/or frequencies													
Non-standard winding [4]	9	0	**M1Y** • and customer specifications	All	All	✓	✓	✓	✓	✓	✓	✓	✓

□ Standard version
○ Without additional charge
• This order code only determines the price of the version – Additional plain text is required.
✓ With additional charge
– Not possible

1) For North America export versions "NEMA Energy Efficient" and "NEMA Premium Efficient" , voltages above 600 V will not be stamped.

2) Not permitted for export versions "NEMA Energy Efficient" and "NEMA Premium Efficient".

3) Only possible for 4-pole, 6-pole and 8-pole motors. The operating data for converter operation is also provided in a table on the rating plate.

4) Plain text must be specified in the order: Voltage between 200 and 690 V (voltages outside this range are available on request), frequency, circuit, for 60 Hz additionally required rated output in kW.

© Siemens AG 2015

Selection and ordering data

Types of construction		Type of construction letter 14th position of the Article No.	Additional identification code with order code and plain text if required	Motor category								
				Motor version	**Motor type (cast-iron)**	**Motor type – frame size**						
						112	**132**	**160**	**180**	**200**	**225**	**250**	**280**
				TEFC (IC411)	1PC1433	**1PC1433 for direct-on-line operation (DOL) ①**							
					1PC1443	**1PC1443 for converter operation (VSD) ②**							
				TENV (IC410)	1PC1463	**1PC1463 for converter operation (VSD) ③**							
				Motor version	Motor type	Frame size							
						112	132	160	180	200	225	250	280
1PC14 . . - . . . . . - . ■ . . (Z)			Order code										
Without flange													
IM B3	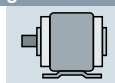	**A**	**–**	All	All	□	□	□	□	□	□	□	□
With flange		**acc. to EN 50347 acc. to DIN 42 948**				**FF215 A 250**	**FF265 A 300**	**FF300 A 350**	**FF300 A 350**	**FF350 A 400**	**FF400 A 450**	**FF500 A 550**	**FF500 A 550**
IM B5	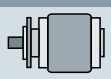	**F**	**–**	All	All	✓	✓	✓	✓	✓	✓	–	–
IM V1 without canopy		**G**	**–**	All	All	✓	✓	✓	✓	✓	✓	✓	✓
IM V1 with protective cover	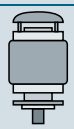	**G**	**H00**	All	All	✓	✓	✓	✓	✓	✓	✓	✓
IM V3		**H**	**–**	All	All	✓	✓	✓	✓	✓	✓	✓	✓
IM B35	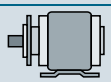	**J**	**–**	All	All	✓	✓	✓	✓	✓	✓	✓	✓

✓ With additional charge

© Siemens AG 2015

Selection and ordering data

Motor protection	Motor protection letter 15th position of the Article No.	Additional identification code with order code and plain text if required	Motor category								
			Motor version	**Motor type (cast-iron)**	**Motor type – frame size**						
					112	**132**	**160**	**180**	**200**	**225**	**250**	**280**
			TEFC (IC411)	1PC1433	**1PC1433 for direct-on-line operation (DOL) ①**							
				1PC1443	**1PC1443 for converter operation (VSD) ②**							
			TENV (IC410)	1PC1463	**1PC1463 for converter operation (VSD) ③**							
1PC14 . . - . . . . . - . . ■ .		Order code	Motor version	Motor type	Frame size							
					112	132	160	180	200	225	250	280
Motor protection (winding protection)												
Without motor protection	A	–	Standard for ①, not for ② and ③		□	□	□	□	□	□	□	□
Motor protection with PTC thermistors with 1 or 3 embedded temperature sensors for tripping [1]	B	–	All	All	✓	✓	✓	✓	✓	✓	✓	✓
Motor protection by PTC thermistors with 2 or 6 embedded temperature sensors for alarm and tripping [1]	C	–	Standard for ② and ③		✓	✓	✓	✓	✓	✓	✓	✓
Motor temperature detection with integrated temperature sensor KTY 84-130 [1]	F	–	All	All	✓	✓	✓	✓	✓	✓	✓	✓
Motor temperature detection with embedded temperature sensor 2 x KTY 84-130 [1]	G	–	All	All	✓	✓	✓	✓	✓	✓	✓	✓
Installation of 3 Pt100 resistance thermometers	H	–	All	All	✓	✓	✓	✓	✓	✓	✓	✓
Installation of 6 Pt100 resistance thermometers	J	–	All	All	–	–	–	✓	✓	✓	✓	✓

□ Standard version
✓ With additional charge
– Not possible

Note:

Options are available specifically for bearing protection –
For order codes and descriptions, see from Page 5/65.

[1] Evaluation with appropriate tripping unit (see Catalog IC 10) is recommended.

© Siemens AG 2015

Selection and ordering data

Terminal box position	Terminal box position identification code 16th position of the Article No.	Additional identification code with order code and plain text if required	Motor category								
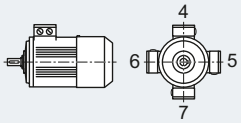			**Motor version**	**Motor type (cast-iron)**	**Motor type – frame size**							
					112	**132**	**160**	**180**	**200**	**225**	**250**	**280**
			TEFC (IC411)	1PC1433	**1PC1433 for direct-on-line operation (DOL) ①**							
				1PC1443	**1PC1443 for converter operation (VSD) ②**							
			TENV (IC410)	1PC1463	**1PC1463 for converter operation (VSD) ③**							
1PC14 . . - . . . . . - . . . ■		Order code	Motor version	Motor type	Frame size							
					112	132	160	180	200	225	250	280
Terminal box position [1]												
Terminal box at top	4	–	All	All	□	□	□	□	□	□	□	□
Terminal box on RHS	5	–	All	All	✓	✓	✓	✓	✓	✓	✓	✓
Terminal box on LHS	6	–	All	All	✓	✓	✓	✓	✓	✓	✓	✓

□ Standard version
✓ With additional charge

1) For types of construction with feet, cast feet are standard.

© Siemens AG 2015

Selection and ordering data

Special versions	Additional identification code **-Z** with order code and plain text if required	Motor category								
		Motor version	**Motor type (cast-iron)**	**Motor type – frame size**							
				112	**132**	**160**	**180**	**200**	**225**	**250**	**280**
		TEFC (IC411)	1PC1433	**1PC1433 for direct-on-line operation (DOL) ①**							
			1PC1443	**1PC1443 for converter operation (VSD) ②**							
		TENV (IC410)	1PC1463	**1PC1463 for converter operation (VSD) ③**							
1PC14 . . - . . . . . - . . . . -Z	Order code	Motor version	Motor type	Frame size							
				112	132	160	180	200	225	250	280
Motor protection (bearing protection)											
Prepared for mounting a SIPLUS CMS 1000 vibration sensor	**Q05**	All	All	✓	✓	✓	✓	✓	✓	✓	✓
Motor connection and terminal box											
External grounding		All	All	◘	◘	◘	◘	◘	◘	◘	◘
Terminal box on NDE	**H08**	All	All	–	–	–	✓	✓	✓	✓	✓
Second external grounding	**H70**	All	All	✓	✓	✓	✓	✓	✓	✓	✓
Rotation of the terminal box through 90°, entry from DE	**R10**	All	All	✓	✓	✓	✓	✓	✓	✓	✓
Rotation of the terminal box through 90°, entry from NDE	**R11**	All	All	✓	✓	✓	✓	✓	✓	✓	✓
Rotation of the terminal box through 180°	**R12**	All	All	○	○	○	✓	✓	✓	✓	✓
One metal cable gland	**R15**	All	All	✓	✓	✓	✓	✓	✓	✓	✓
EMC cable gland, maximum configuration	**R16**	All	All	–	–	–	✓	✓	✓	✓	✓
Cable gland, maximum configuration	**R18**	All	All	✓	✓	✓	✓	✓	✓	✓	✓
Larger terminal box	**R50**	All	All	✓	✓	–	✓	✓	✓	✓	✓
Terminal box without cable entry opening	**R51**	All	All	–	–	–	○	○	○	○	○
Silicon-free version	**R74**	All	All	◘	◘	◘	◘	◘	◘	✓	✓
Windings and insulation											
Temperature class 180 (H) at rated output and max. CT 60 °C [1]	**N11**	All	All	✓	✓	✓	✓	✓	✓	✓	✓
Colors and paint finish											
Standard finish in RAL 7030 stone gray		All	All	◘	◘	◘	◘	◘	◘	◘	◘
Special finish	**S02**	All	All	✓	✓	✓	✓	✓	✓	✓	✓
Finish in other standard RAL colors: RAL 1002, 1013, 1015, 1019, 2003, 2004, 3000, 3007, 5007, 5009, 5010, 5012, 5015, 5017, 5018, 5019, 6011, 6019, 6021, 7000, 7001, 7004, 7011, 7016, 7022, 7031, 7032, 7033, 7035, 9001, 9002, 9005 (see Catalog Section 1 "Introduction")	**Y53 •** and finish in RAL ….	All	All	✓	✓	✓	✓	✓	✓	✓	✓
Finish in special RAL colors: For RAL colors, see "Special finish in special RAL colors" (see Catalog Section 1 "Introduction")	**Y56 •** and finish in RAL ….	All	All	✓	✓	✓	✓	✓	✓	✓	✓
Modular technology – Basic versions [2]											
Mounting of separately driven fan	**F70**	All	All	✓	✓	✓	✓	✓	✓	✓	✓
Special technology											
Mounting of LL 861 900 220 rotary pulse encoder [4]	**G04**	All	All	✓	✓	✓	✓	✓	✓	✓	✓
Mounting of HOG 9 D 1024 I rotary pulse encoder [4]	**G05**	All	All	✓	✓	✓	✓	✓	✓	✓	✓
Mounting of HOG 10 D 1024 I rotary pulse encoder [4]	**G06**	All	All	✓	✓	✓	✓	✓	✓	✓	✓
Mechanical design and degrees of protection											
Prepared for mountings with D16 shaft	**G42**	All	All	✓	✓	✓	✓	✓	✓	✓	✓
Protective cover [3] [4] [5]	**H00**	Only for ① and ②		✓	✓	✓	✓	✓	✓	✓	✓
Condensation drainage holes		All	All	◘	◘	◘	◘	◘	◘	◘	◘
Rust-resistant screws (externally)	**H07**	All	All	✓	✓	✓	✓	✓	✓	✓	✓
IP65 degree of protection [6]	**H20**	All	All	✓	✓	✓	✓	✓	✓	✓	✓
Bearings and lubrication											
Regreasing device	**L23**	All	All	✓	✓	✓	✓	✓	◘	◘	◘
Bearing insulation NDE	**L51**	All	All	–	–	–	–	–	✓	✓	✓

For legends and footnotes, see Page 5/66.

© Siemens AG 2015

Supplements to article numbers and special versions · Options · Cast-iron series 1PC1433, 1PC1443, 1PC1463

Special versions	Additional identification code **-Z** with order code and plain text if required	Motor category								
		Motor version	**Motor type (cast-iron)**	**Motor type – frame size**						
				112	**132**	**160**	**180**	**200**	**225**	**250**	**280**
		TEFC (IC411)	1PC1433	**1PC1433 for direct-on-line operation (DOL) ①**							
			1PC1443	**1PC1443 for converter operation (VSD) ②**							
		TENV (IC410)	1PC1463	**1PC1463 for converter operation (VSD) ③**							
1PC14 . . - . . . . . - . . . . -Z	Order code	Motor version	Motor type	Frame size							
				112	132	160	180	200	225	250	280
Balance and vibration quantity											
Vibration quantity level A		All	All	□	□	□	□	□	□	□	□
Vibration quantity level B	**L00**	All	All	✓	✓	✓	✓	✓	✓	✓	✓
Balancing without feather key, feather key is supplied	**L01**	All	All	✓	✓	✓	✓	✓	✓	✓	✓
Full-key balancing	**L02**	All	All	✓	✓	✓	✓	✓	✓	✓	✓
Shaft and rotor											
Shaft extension with standard dimensions, without feather keyway	**L04**	All	All	✓	✓	✓	✓	✓	✓	✓	✓
Standard shaft made of stainless steel (e.g. 1.4021)	**L06**	All	All	–	–	–	✓	✓	✓	✓	✓
Concentricity of shaft extension in accordance with DIN 42955 Tolerance R	**L07**	All	All	✓	✓	✓	✓	✓	✓	✓	✓
Concentricity of shaft extension, coaxiality and linear movement in accordance with DIN 42955 Tolerance R for flange-mounting motors	**L08**	All	All	✓	✓	✓	✓	✓	✓	✓	✓
Non-standard shaft extension, DE [7]	**Y58** • and customer specifications	All	All	✓	✓	✓	✓	✓	✓	✓	✓
Special shaft steel as requested by customer	**Y60**	All	All	O. R.	O. R.	O. R.	O. R.	O. R.	O. R.	O. R.	O. R.
Heating and ventilation											
Metal external fan	**F76**	All	All	✓	✓	✓	✓	✓	✓	✓	✓
Anti-condensation heating for 230 V	**Q02**	All	All	✓	✓	✓	✓	✓	✓	✓	✓
Anti-condensation heating for 115 V	**Q03**	All	All	✓	✓	✓	✓	✓	✓	✓	✓
Rating plate and extra rating plates											
Second rating plate, loose	**M10**	All	All	✓	✓	✓	✓	✓	✓	✓	✓
Extra rating plate or rating plate with deviating rating plate data	**Y80** • and customer specifications	All	All	✓	✓	✓	✓	✓	✓	✓	✓
Extra rating plate with customer specifications	**Y82** • and customer specifications	All	All	✓	✓	✓	✓	✓	✓	✓	✓
Packaging, safety notes, documentation and test certificates											
Acceptance test certificate 3.1 according to EN 10204 [8]	**B02**	All	All	✓	✓	✓	✓	✓	✓	✓	✓
Printed German/English Operating Instructions enclosed [9]	**B04**	All	All	✓	✓	✓	✓	✓	✓	✓	✓

□ Standard version
○ Without additional charge
• This order code only determines the price of the version – Additional plain text is required.
✓ With additional charge
O. R. Possible on request
– Not possible

1) Cannot be used for motors in UL version (order code **D31**). The grease lifetime specified in Catalog Section 0 "Introduction" refers to CT 40 °C. When the coolant temperature rises by 10 K, the grease lifetime or relubrication interval is halved.

2) A second shaft extension is not possible. Please inquire for mounted brakes.

3) The 1XP8 rotary pulse encoders are fitted with a protective cover as standard. The protective cover is omitted at the factory when a rotary pulse encoder is combined with a separately driven fan, because in this case the rotary pulse encoder is installed under the fan cover.

4) The LL and HOG rotary pulse encoders up to frame size 160 are fitted with a protective cover as standard. The protective cover is omitted at the factory when a rotary pulse encoder is combined with a separately driven fan, because in this case the rotary pulse encoder is installed under the fan cover.

5) Order code **H00** provides mechanical protection for encoders.

6) Not possible in combination with HOG 9 D 1024I rotary pulse encoder (order code **G05**) and/or brake 2LM8 (order code **F01**).

7) When motors are ordered that have a longer or shorter shaft extension than normal, the required position and length of the feather keyway must be specified in a sketch. It must be ensured that only feather keys in accordance with DIN 6885, Form A are permitted to be used. The feather keyway is positioned centrally on the shaft extension. The length is defined by the manufacturer in accordance with the appropriate standard. Not valid for: Conical shafts, non-standard threaded journals, non-standard shaft tolerances, friction welded journals, extremely "thin" shafts, special geometry dimensions (e.g. square journals), hollow shafts. Applies to non-standard shaft extensions DE. The feather keys are supplied in every case. The following applies to order code **Y58**:
- Dimensions D and DA ≤ Inner diameter of roller bearing (see tables under "Dimensions")
- Dimensions E and EA ≤2 x length E (normal) of the shaft extension.

8) The delivery time for the factory test certificate may differ from the delivery time for the motor.

9) The Operating Instructions (Compact) are available in PDF format for all official EU languages at http://support.automation.siemens.com/WW/view/en/10803948/133300

© Siemens AG 2015

Overview

Slide rails with fixing bolts and tensioning screws according to DIN 42923

Slide rails are used to tension the belt of a machine easily and conveniently when a belt tightener is not available. They are fixed to the base using stone bolts or foundation blocks.

The assignment of slide rails to motor size can be found in DIN 42923. For motors of frame sizes 355 to 450, there are no standardized slide rails (please inquire).

Available from:

Lütgert & Co. GmbH
Postfach 42 51
33276 Gütersloh, Germany
Tel. +49 (5241) 7407-0
Fax +49 (5241) 7407-90

http://www.luetgert-antriebe.de
E-mail: info@luetgert-antriebe.de

Foundation block acc. to DIN 799

The foundation blocks are inserted into the stone foundation and embedded in concrete. They are used for fixing machines of medium size, slide rails, pedestal bearings, baseframes, etc. After the fixing bolts have been unscrewed, the machine can be dragged without it having to be lifted.

When the machine is initially installed, the foundation block that is bolted to the machine (without washers) and fitted with taper pins is not embedded with concrete until the machine has been fully aligned. In this case, the machine is positioned 2 to 3 mm lower. The difference in shaft height is compensated by inserting shims on final installation. The taper pins safeguard the exact position of the machine when it is repeatedly removed and replaced without the need for realignment.

Available from:

Lütgert & Co. GmbH
Postfach 42 51
33276 Gütersloh, Germany
Tel. +49 (5241) 7407-0
Fax +49 (5241) 7407-90

http://www.luetgert-antriebe.de
E-mail: info@luetgert-antriebe.de

Taper pins to DIN 258 with threaded ends and constant taper lengths

Taper pins are used for components that are repeatedly removed. The drilled hole is ground conically using a conical reamer until the pin can be pushed in by hand until the cone shoulder lies 3 to 4 mm above the rim of the hole.

It can then be driven in using a hammer until it is correctly seated. The pin is removed from the drilled hole by screwing on the nut and tightening it.

Standardized taper pins are available from general engineering suppliers.

Available from:

Otto Roth GmbH & Co. KG
Rutesheimer Strasse 22
70499 Stuttgart, Germany
Tel. +49 (711) 1388-0
Fax. +49 (711) 1388-233

http://www.ottoroth.de
E-mail: info@ottoroth.de

Couplings

The motor from Siemens is connected to the machine or gear unit through a coupling. Flender is an important coupling manufacturer with a wide range of products. For standard applications, Siemens recommends that elastic couplings of Flender types N-Eupex and Rupex or torsionally rigid couplings of types Arpex and Zapex are used. For special applications, Fludex and Elpex couplings are recommended.

Available from:
Siemens contact partner - ordering from catalog
Siemens MD 10.1 "FLENDER Standard Couplings"

or

A. Friedr. Flender AG
Kupplungswerk Mussum
Industriepark Bocholt
Schlavenhorst 100
46395 Bocholt, Germany
Tel. +49 (2871) 922185
Fax +49 (2871) 0922579

http://www.flender.com
E-mail: couplings@flender.com

More information

Spare motors and repair parts

- Supply commitment for spare motors and repair parts following delivery of the motor
  - For up to 3 years, in the event of total motor failure, Siemens will supply a comparable motor with regard to the mounting dimensions and functions (the type series may vary).
  - Repair parts will be supplied for up to 5 years.
  - For up to 5 years, Siemens will provide information and will, if necessary, supply documentation for repair parts.
  - Replacement motors delivered after the active production of the machine series are also identified with "Spare motor" on the rating plate. Spare parts are offered only on request for these motors.
- When repair parts are ordered, the following details must be provided:
  - Designation and part number
  - Article No. and factory number of the motor
- For bearing types, see the "Introduction".
- For standard components, a supply commitment does not apply.
- Support – Hotline
  In Germany
  Tel.: +49 (180) 5050448

National telephone numbers can be found on the Internet page:
http://www.siemens.com/automation/service&support

© Siemens AG 2015

Overview

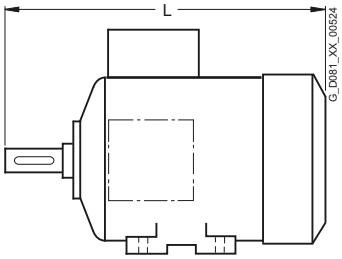

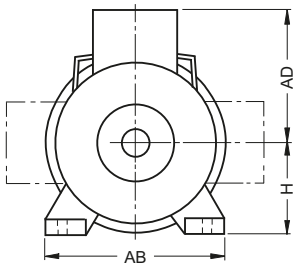

Frame size	Type	Dimensions L	AD	H	AB	O
112 M	Cast-iron series, self-ventilated					
	1PC1433, 1PC1443	407	195	112	226	2 × M32 × 1.5
132 S	Cast-iron series, self-ventilated					
	1PC1433, 1PC1443	457	214.5	132	256	2 × M32 × 1.5
	Cast-iron series, naturally cooled					
	1PC1463	372	214.5	132	256	2 × M32 × 1.5
132 M	Cast-iron series, self-ventilated					
	1PC1433, 1PC1443	507	214.5	132	256	2 × M32 × 1.5
	Cast-iron series, naturally cooled					
	1PC1463	422	214.5	132	256	2 × M32 × 1.5
160 M	Cast-iron series, self-ventilated					
	1PC1433, 1PC1443	594	265	160	300	2 × M40 × 1.5
	Cast-iron series, naturally cooled					
	1PC1463	500	265	160	300	2 × M40 × 1.5
160 L	Cast-iron series, self-ventilated					
	1PC1433, 1PC1443	654	265	160	300	2 × M40 × 1.5
	Cast-iron series, naturally cooled					
	1PC1463- 1DB4 1DB6	 500 560	265	160	300	2 × M40 × 1.5
180 M	Cast-iron series, self-ventilated					
	1PC1433, 1PC1443	669	286	180	339	2 × M40 × 1.5
	Cast-iron series, naturally cooled					
	1PC1463	571	286	180	339	2 × M40 × 1.5
180 L	Cast-iron series, self-ventilated					
	1PC1433, 1PC1443	699	286	180	339	2 × M40 × 1.5
	Cast-iron series, naturally cooled					
	1PC1463- 1EB4 1EC4	 671 571	286	180	339	2 × M40 × 1.5

Frame size	Type	Dimensions L	AD	H	AB	O
200 L	Cast-iron series, self-ventilated					
	1PC1433-, 1PC1443- 2AC4 2AB5, 2AC5	 721 746	315	200	378	2 × M50 × 1.5
	Cast-iron series, naturally cooled					
	1PC1463	652	315	200	378	2 × M50 × 1.5
225 S	Cast-iron series, self-ventilated					
	1PC1433, 1PC1443	788	338	225	436	2 × M50 × 1.5
225 M	Cast-iron series, self-ventilated					
	1PC1433, 1PC1443	848	338	225	436	2 × M50 × 1.5
	Cast-iron series, naturally cooled					
	1PC1463	728	338	225	436	2 × M50 × 1.5
250 M	Cast-iron series, self-ventilated					
	1PC1433, 1PC1443	887	410	250	490	2 × M63 × 1.5
	Cast-iron series, naturally cooled					
	1PC1463	762	410	250	490	2 × M63 × 1.5
280 S	Cast-iron series, self-ventilated					
	1PC1433, 1PC1443	960	433	280	540	2 × M63 × 1.5
	Cast-iron series, naturally cooled					
	1PC1463	830	433	280	540	2 × M63 × 1.5
280 M	Cast-iron series, self-ventilated					
	1PC1433, 1PC1443	1070	433	280	540	2 × M63 × 1.5
	Cast-iron series, naturally cooled					
	1PC1463	830	433	280	540	2 × M63 × 1.5

© Siemens AG 2015

Overview (continued)

Notes on the dimensions

- Dimensional drawings according to EN 50347 and IEC 60072.
- Fits
  The shaft extensions specified in the dimension tables (DIN 748) and centering spigot diameters (EN 50347) are machined with the following fits:

Dimension designation	ISO fit ISO 286-2	
D, DA	to 30	j6
	over 30 to 50	k6
	over 50	m6
N	to 250	j6
	over 250	h6
F, FA		h9
K		H17
S	flange (FF)	H17

  The drilled holes of couplings and belt pulleys should have an ISO fit of at least H7.

- Dimension tolerances
  For the following dimension designations, the admissible deviations are given below:

Dimension designation	Dimension	Admissible deviation
H	to 250	– 0.5
	over 250	– 1.0
E, EA		– 0.5

  Keyways and feather keyways (dimensions GA, GC, F and FA) are made in compliance with DIN 6885 Part 1.
- All dimensions are specified in mm.

Dimension sheet generator

(within the Drive Technology Configurator)

A dimensional drawing can be created in the Drive Technology (DT) Configurator for every configurable motor. A dimensional drawing can be requested for every other motor.

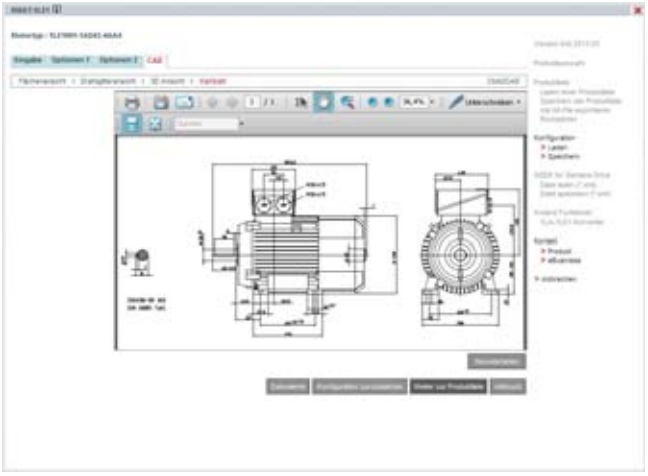

When a complete Article No. is entered with or without order codes, a dimensional drawing can be called up under the "Documentation" tab.
These dimensional drawings can be presented in different views and sections and printed.
The corresponding dimension sheets can be exported, saved and processed further in DXF format (interchange/import format for CAD systems) or as bitmap graphics.

Online access in the Siemens Industry Mall

The DT Configurator is integrated in the Siemens Industry Mall and can be used on the Internet without installation.
English: www.siemens.com/dt-configurator

Offline access in the Interactive Catalog CA 01

The DT Configurator is also part of the Interactive Catalog CA 01 on DVD – the offline version of Siemens Industry Mall. CA 01 can be ordered from the relevant Siemens sales office or via the Internet: www.siemens.com/automation/CA01

© Siemens AG 2015

Dimensional drawings

Type of construction IM B3

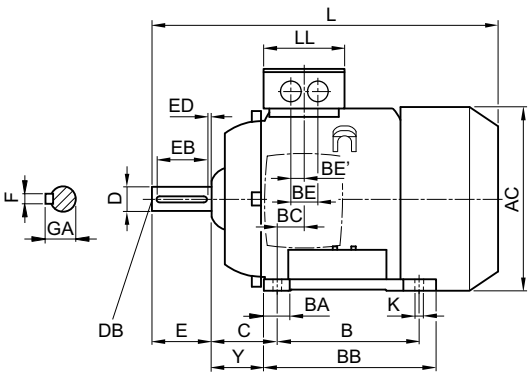

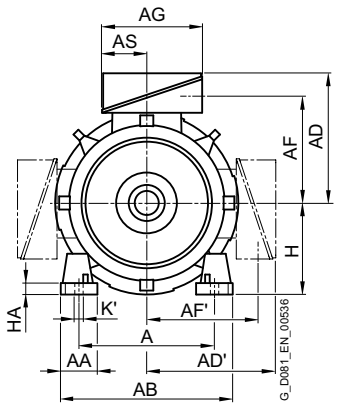

Integral feet only for frame sizes 132 S/M and 160 L/M have 2 holes at NDE

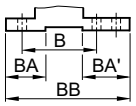

Types of construction IM B5 and IM V1

For flange dimensions, see Page 1/34 (**Z** = the number of retaining holes)

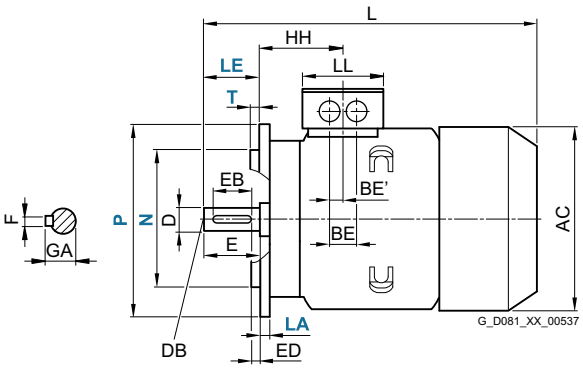

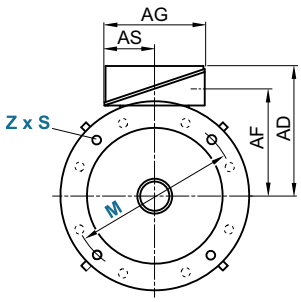

For motor	Type		Dimension designation acc. to **IEC**																			
Frame size	1PC1433- 1PC1443-	No. of poles	A	AA	AB	AC	AD	AD'	AF	AF'	AG	AS	B*	BA	BA'	BB	BC	BE	BE'	C	H	HA	Y
112 M	All	4, 6	190	46	226	222	195	195	150	150	163	80.5	140	40	–	176	30	48	24	70	112	12	52
132 S	All	4, 6	216	53	256	262	214.5	214.5	169	169	163	80.5	140	44	81[1]	218[3]	26.5	48	24	89	132	15	69
132 M	All	4, 6	216	53	256	262	214.5	214.5	169	169	163	80.5	178	44	81[1]	218	26.5	48	24	89	132	15	69
160 M	All	4, 6	254	60	300	314	265	265	213	213	190	92	210	51	95[2]	300[4]	37	60	30	108	160	18	85
160 L	All	4, 6	254	60	300	314	265	265	213	213	190	92	254	51	95[2]	300	37	60	30	108	160	18	85

* This dimension is assigned in EN 50347 to the frame size listed.

[1] With screwed-on feet, dimension BA' is 43 mm.
[2] With screwed-on feet, dimension BA' is 51 mm.
[3] With screwed-on feet, dimension BB is 180 mm.
[4] With screwed-on feet, dimension BB is 256 mm.

© Siemens AG 2015

Dimensional drawings (continued)

Type of construction IM B35

For flange dimensions, see Page 1/34 (**Z** = the number of retaining holes)

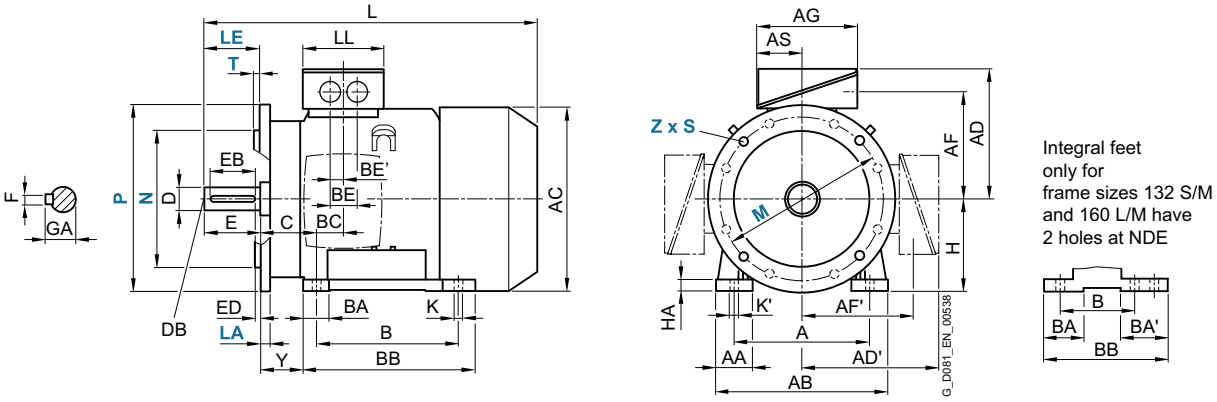

For motor	Type		Dimension designation acc. to **IEC**					DE shaft extension					
Frame size	1PC1433- 1PC1443-	No. of poles	HH	K	K'	L	LL	D	DB	E	EB	ED	F
112 M	All	4, 6	100.5	12	16	407	134	28	M10	60	50	5	8
132 S	All	4, 6	115.5	12	16	457	134	38	M12	80	70	5	10
132 M	All	4, 6	115.5	12	16	507	134	38	M12	80	70	5	10
160 M	All	4, 6	145	15	19	594	165	42	M16	110	90	10	12
160 L	All	4, 6	145	15	19	654	165	42	M16	110	90	10	12

© Siemens AG 2015

Dimensional drawings

Type of construction IM B3

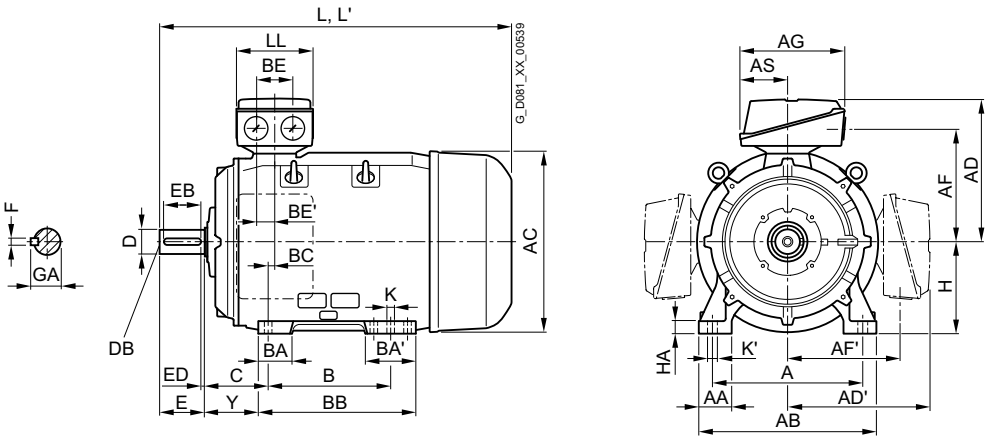

Types of construction IM B5 and IM V1

For flange dimensions, see Page 1/34 (**Z** = the number of retaining holes)

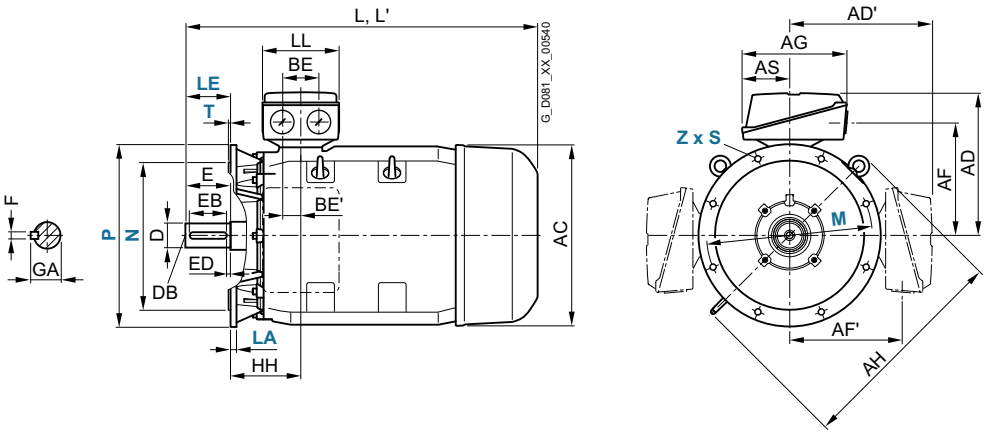

For motor	Type		Dimension designation acc. to **IEC**																		
Frame size	1PC1433- 1PC1443-	No. of poles	A	AA	AB	AC	AD	AD'	AF	AF'	AG	AH	AS	B*	BA	BA'	BB	BC	BE	BE'	C
180 M	All	4	279	65	339	356	286	286	234	234	190	468	92	241	85	120	328	34	60	30	121
180 L	All	4, 6	279	65	339	356	286	286	234	234	190	468	92	279	85	120	328	34	60	30	121
200 L	2AC4	6	318	70	378	396	315	315	259	259	266	533	112	305	104	104	355	31	85	42.5	133
	2AB5, 2AC5	4, 6																			
225 S	All	4	356	80	436	449	338	338	282	282	266	556	112	311	92	117	361	15	85	42.5	149
225 M	All	4, 6	356	80	436	449	338	338	282	282	266	556	112	311	92	117	361	15	85	42.5	149
250 M	All	4, 6	406	100	490	497	410	410	322	322	319	620	145	349	102	102	409	24	110	55	168
280 S	All	4, 6	457	100	540	551	433	433	345	345	319	672	145	368	101	152	479	20	110	55	190
280 M	All	4, 6	457	100	540	551	433	433	345	345	319	672	145	419	101	152	479	20	110	55	190

* This dimension is assigned in EN 50347 to the frame size listed.

© Siemens AG 2015

Dimensional drawings (continued)

Type of construction IM B35

For flange dimensions, see Page 1/34 (**Z** = the number of retaining holes)

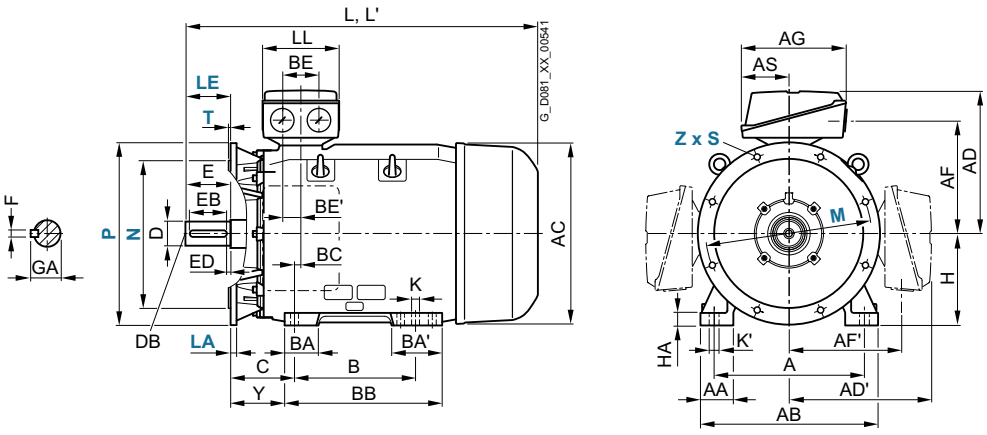

For motor	Type	No. of poles	Dimension designation acc. to **IEC**								DE shaft extension					
Frame size	1PC1433 1PC1443		H	HA	Y	HH	K	K'	L	LL	D	DB	E	EB	ED	F
180 M	All	4	180	20	95	155	15	19	669	165	48	M16	110	100	5	14
180 L	All	4, 6	180	20	95	155	15	19	699	165	48	M16	110	100	5	14
200 L	2AC4	6	200	25	108	164	19	25	721	197	55	M20	110	100	5	16
	2AB5, 2AC5	4, 6							746							
225 S	All	4	225	34	124	164	19	25	788	197	60	M20	140	125	10	18
225 M	All	4, 6	225	34	124	164	19	25	848	197	60	M20	140	125	10	18
250 M	All	4, 6	250	40	138	192	24	30	887	233	60	M20	140	125	10	18
280 S	All	4, 6	280	40	160	210	24	30	960	233	75	M20	140	125	10	20
280 M	All	4, 6	280	40	160	210	24	30	1070	233	75	M20	140	125	10	20

© Siemens AG 2015

Dimensional drawings

Type of construction IM B3

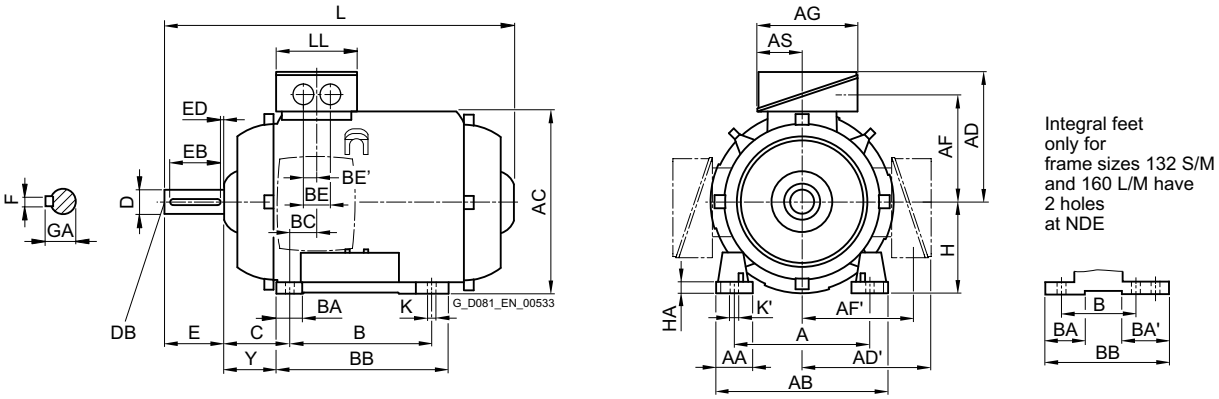

Types of construction IM B5 and IM V1

For flange dimensions, see Page 1/34 (**Z** = the number of retaining holes)

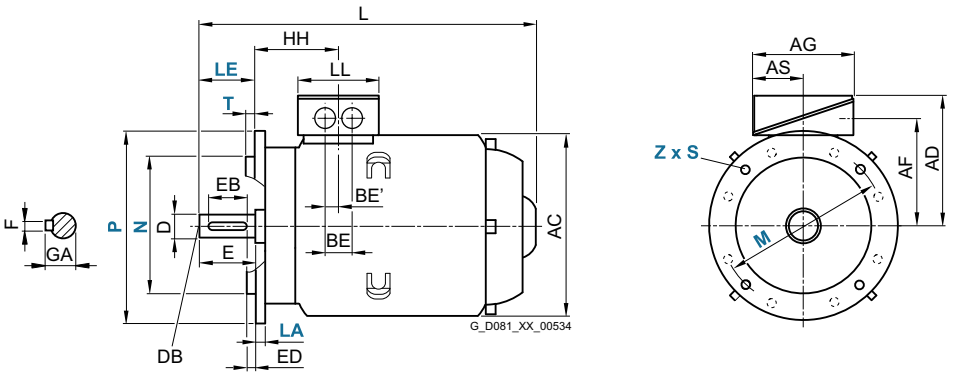

For motor	Type		Dimension designation acc. to IEC																	
Frame size	1PC1463-	No. of poles	A	AA	AB	AC	AD	AD'	AF	AF'	AG	AS	B*	BA	BA'	BB	BC	BE	BE'	C
132 S	All	4	216	53	256	262	214.5	214.5	169	169	163	80.5	140	44	81[1]	218[3]	26.5	48	24	89
132 M	All	4	216	53	256	262	214.5	214.5	169	169	163	80.5	178	44	81[1]	218	26.5	48	24	89
160 L	1DB4	4	254	60	300	314	265	265	213	213	190	92	210	51	95[2]	300[4]	37	60	30	108
	1DB6	4											254							
180 M	1EB2, 1EC4	4	279	65	339	356	286	286	234	234	190	92	241	85	120	328	34	60	30	121
180 L	1EB4	4	279	65	339	356	286	286	234	234	190	92	279	85	120	328	34	60	30	121
	1EC4	6											241							
200 L	2AC5	6	318	70	378	396	315	315	259	259	266	112	305	104	104	355	31	85	42.5	133
225 M	2BC2	6	356	80	436	449	338	338	282	282	266	112	311	92	117	361	15	85	42.5	149
250 M	2CC2	6	406	100	490	497	410	410	322	322	319	145	349	102	102	409	24	110	55	168
280 S	2DC0	6	457	100	540	551	433	433	345	345	319	145	368	101	152	479	20	110	55	190
280 M	2DC2	6	457	100	540	551	433	433	345	345	319	145	419	101	152	479	20	110	55	190

* This dimension is assigned in EN 50347 to the frame size listed.

[1] With screwed-on feet, dimension BA' is 43 mm.
[2] With screwed-on feet, dimension BA' is 51 mm.
[3] With screwed-on feet, dimension BB is 180 mm.
[4] With screwed-on feet, dimension BB is 256 mm.

© Siemens AG 2015

Dimensional drawings (continued)

Type of construction IM B35

For flange dimensions, see Page 1/34 (**Z** = the number of retaining holes)

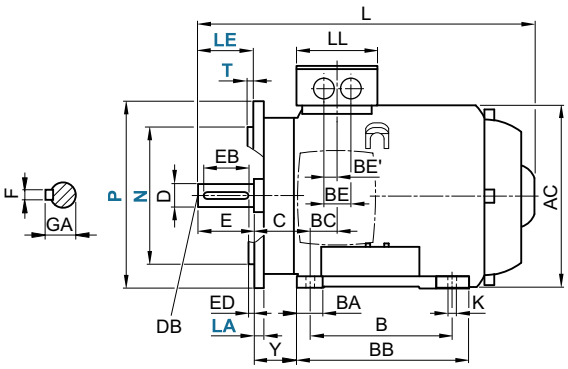

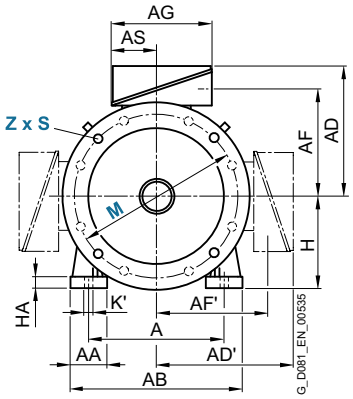

Integral feet only for frame sizes 132 S/M and 160 L/M have 2 holes at NDE

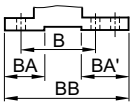

For motor	Type		Dimension designation acc. to IEC								DE shaft extension					
Frame size	1PC1463-	No. of poles	H	HA	Y	HH	K	K'	L	LL	D	DB	E	EB	ED	F
132 S	All	4	132	15	69	115.5	12	16	372	134	38	M12	80	70	5	10
132 M	All	4	132	15	69	115.5	12	16	422	134	38	M12	80	70	5	10
160 L	1DB4	4	160	18	85	145	15	19	500	165	42	M16	110	90	10	12
	1DB6	4							560							
180 M	1EB2	4	180	20	95	155	15	19	571	165	48	M16	110	100	5	14
180 L	1EB4	4	180	20	95	155	15	19	671	165	48	M16	110	100	5	14
	1EC4	6							571							
200 L	2AC5	6	200	25	108	164	19	25	652	197	55	M20	110	100	5	16
225 M	2BC2	6	225	34	124	164	19	25	728	197	60	M20	140	125	10	18
250 M	2CC2	6	250	40	138	192	24	30	762	233	65	M20	140	125	10	18
280 S	2DC0	6	280	40	160	210	24	30	830	233	75	M20	140	125	10	20
280 M	2DC2	6	280	40	160	210	24	30	830	233	75	M20	140	125	10	20

© Siemens AG 2015

Notes

© Siemens AG 2015

Appendix



6/2 NEMA motors
6/2 Motors according to NEMA standard

6/5 Industry Services
6/5 Your machines and plant can do more – with Industry Services.
6/6 – Online Support
6/6 – Technical Support
6/7 – Spare Parts
6/7 – Repair Services
6/7 – Field Services
6/8 – Training
6/8 – Technical Consulting & Engineering Support
6/8 – Energy & Environmental Services
6/9 – Modernization & Optimization Services
6/9 – Plant Maintenance & Condition Monitoring
6/9 – Service Contracts

6/10 Partners at Industry

6/11 Online Services
6/11 Information and Ordering in the Internet and on DVD
6/11 • Siemens Industry Automation and Drive Technologies in the WWW
6/11 • Product Selection Using Interactive Catalog CA 01 of Industry
6/11 • Easy Shopping with the Industry Mall
6/12 Information and Download Center
6/12 • Downloading Catalogs

6/13 Tools and engineering
6/13 Engineering Tool
SIZER WEB ENGINEERING
6/13 • Overview
6/13 • Function
6/13 • More information
6/14 Drive Technology Configurator selection tool
6/14 • Overview
6/14 • Selection and ordering data
6/14 • More information
6/15 SinaSave efficiency tool
6/15 • Overview
6/15 • More information
6/16 SIMOTICS EE-COMPARATOR
6/16 • Overview
6/16 • More information
6/17 SIZER for Siemens Drives configuration tool
6/17 • Overview
6/17 • Selection and ordering data
6/17 • More information
6/18 SIPLUS CMS condition monitoring systems for the continuous condition monitoring of motors
6/18 • Overview

6/19 Indexes
6/19 Subject index
6/23 Article number index
6/24 Index of order codes

6/33 Metal surcharges
6/33 • Explanation of the raw material/ metal surcharges
6/34 • Explanation of the raw material/ metal surcharges for dysprosium and neodym (rare earths)
6/35 • Values of the metal factor

6/36 Conditions of sale and delivery, Export regulations
6/36 • 1. General Provisions
6/36 • 2. Prices
6/36 • 3. Additional Terms and Conditions
6/36 • 4. Export regulations

© Siemens AG 2015

Motors according to NEMA standard

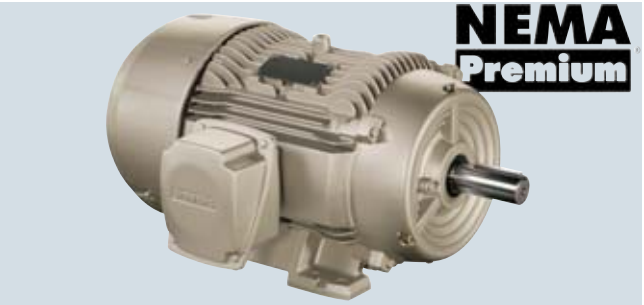

NEMA motors (National Electrical Manufacturers Association) for the North American market distinguish themselves as a result of their new design – and especially as a result of their efficiency. Siemens offers a complete line of General Purpose motors (aluminum and cast-iron design), Severe Duty motors, IEEE 841 and XP motors with NEMA Premium or higher efficiencies. Energy-saving motors with NEMA Premium efficiency class comply with the US EISA legislation (Energy Independence and Security Act) for minimum efficiencies. Our NEMA Premium + efficiency class exceeds the efficiencies specified in the EISA standards.
The motors are mechanically and electrically compliant with NEMA MG1. In addition to the minimum efficiencies specified in the US, these motors also fulfill the minimum efficiency requirements for Canada (CSA) and Mexico (NOM).

General technical specifications

Voltage and power range	208 ... 230/460 V, 575 V, 60 Hz 1 ... 400 hp (0.75 ... 300 kW)
Frame sizes and types	NEMA frame sizes 140 ... 440
Pole number and frequencies	2, 4, 6 and 8-pole, 60 Hz
Environmental conditions	Surface-cooled with degree of protection IP54/IP55

Customer benefits

Copper die-cast rotors optimize the efficiency
Copper die-cast rotors reduce the power loss and slightly reduce the motor length. This version reduces the motor life cycle costs as a result of the lower energy consumption.

Can be easily modified for high versatility
Unmounted feet (aluminum housing) or 8-hole foot mounting (cast-iron housing) make it easier to modify the motors, ensure a high degree of versatility and reduce inventory costs – for the OEM as well as for servicing and maintenance.

A design that fulfills each and every requirement
We offer motors suitable for any application in a lightweight aluminum design or with a rugged cast-iron housing. Both variants are available with NEMA Premium or NEMA Premium + efficiency. The perfect fit for any operating period.

Typical applications

NEMA motors are suitable throughout the industrial and commercial field, in the automobile, textile, printing and chemical industries as well as in cross-industry applications – for example in conveyor technology. The HVAC sector (Heating, Ventilating & Air Conditioning), for instance, which requires extremely light motors, provides typical applications for our so-called General Purpose motors – either with cast-iron or aluminum housings. Severe Duty motors in a fully cast-iron design are suitable for use under harsh environmental conditions – for instance in the pulp and paper industry. The Severe Duty SD100 IEEE 841 motor version even exceeds the stringent IEEE 841 standards applicable in the crude oil and chemical industries.

More information

The full range of products with all ordering data and technical information can be found in Catalog
D 81.2, US/Canada www.sea.siemens.com/motors.

General Purpose



	GP100A	
Power range	1 ... 20 hp (0.75 ... 15 kW)	FS 140 ... 250
Frame size (FS)	140 ... 250	
Degree of protection NEMA MG1	TEFC (totally enclosed fan cooled)	
Housing material	Die-cast aluminum	8-hole foot mounting
Efficiency	NEMA Premium NEMA Premium +	FS 140 ... 250 FS 140 ... 250
Power supply	3-phase, 60 Hz	
Voltage	208 ... 230/460 V 575 V	FS 140 ... 250 FS 140 ... 250
Service factor	1.15	Sinusoidal
Electrical design	NEMA design B	
Hazard classification	Not specified	
Insulation	Class F	NEMA MG1 Part 31
Utilization	Class B at 1.0 SF, Class F at 1.15 SF	Sinusoidal
Terminal box (oversized)	Die-cast aluminum	FS 140 ... 250
Fan cover	Plastic	FS 140 ... 250
Fan	Bi-directional - Polypropylene	
Seal	O ring	FS 140 ... 250
Rotor material	Die-cast aluminum Die-cast copper	FS 140 ... 250 FS 140 ... 250
Stator winding	Copper – random wound	
Shaft material	High-strength carbon steel	C1045
Shaft seal/ slinger	V-ring slinger meets IP54	(DE only)
Bearing housing	Cast aluminum	FS 140 ... 250
Bearing type	Double-shielded	FS 140 ... 250
Bearing inner cap	No	
Lubrication	Polyurea	Base grease
Oil filling nozzle	Not specified	
Oil drain valve	Not specified	
Vibrations	0.15 IPS	
Rating plate	Aluminum	Engraved
Condensation drainage hole	Condensation drainage holes – lowest point (2)	
Mountings	Rust-resistant	
Eyebolt	Cast	
Paint	ALKYED modified	RAL7030
Warranty	18 months	
Converter operation	VT 20:1 CT 4:1 CT 10:1	FS 140 ... 250 FS 140 ... 250 FS 140 ... 250 (Cu)
Catalog	**D 81.2, US/Canada**	

© Siemens AG 2015

			Severe Duty			
						
	GP100		**SD100**		**SD100 IEEE 841**	
	1 ... 200 hp (0.75 ... 132 kW)	FS 140 ... 440	1 ... 400 hp (0.75 ... 300 kW)	FS 140 ... S440	1 ... 400 hp (0.75 ... 300 kW)	FS 140 ... S440
	140 ... 440		140 ... S449		140 ... S449	
	TEFC (totally enclosed fan cooled)		TEFC (totally enclosed fan cooled)		TEFC (totally enclosed fan cooled)	
	Cast iron	8-hole foot	Cast iron	8-hole foot	Cast iron	8-hole foot
	NEMA Premium NEMA Premium +	FS 140 ... 440 FS 140 ... 250	NEMA Premium NEMA Premium +	FS 140 ... S440 FS 140 ... 250	NEMA Premium NEMA Premium +	FS 140 ... S440 FS 140 ... 250
	3-phase, 60 Hz		3-phase, 60 Hz		3-phase, 60 Hz	
	208 ... 230/460 V 230/460 V 460 V 575 V	FS 140 ... 250 FS 280 ... 360 100 ... 200 hp 1 ... 200 hp	208 ... 230/460 V 460 V 575 V	1 ... 20 hp 25 ... 400 hp 1 ... 400 hp	460 V 575 V	FS 140 ... S440 FS 140 ... S440
	1.15	Sinusoidal	1.15	Sinusoidal	1.15	Sinusoidal
	NEMA design B		NEMA design B		NEMA design B	
	Not specified		CL I Gr, C&D Div. 2	Optional	CL I Gr, C&D Div. 2	Optional
	Class F	NEMA MG1 Part 31	Class F	NEMA MG1 Part 31	Class F	NEMA MG1 Part 31
	Class B at 1.0 SF, Class F at 1.15 SF	Sinusoidal	Class B at 1.0 SF, Class F at 1.15 SF	Sinusoidal	Class B at 1.0 SF, Class F at 1.15 SF	Sinusoidal
	Die-cast aluminum Steel Cast iron	FS 140 ... 250 FS 280 ... 400 FS 440	Cast iron		Cast iron	
	Plastic Cast iron	FS 140 ... 250 FS 280 ... 440	Cast iron	FS 140 ... S440	Cast iron	FS 140 ... S440
	Bi-directional - Polypropylene		Bi-directional - Polypropylene - Bronze Counter-clockwise	FS 140 ... 440 FS S440 300 ... 400 hp 2P/4P	Bi-directional - Polypropylene - Bronze Counter-clockwise	FS 140 ... 440 FS S440 300 ... 400 hp 2P/4P
	O-ring Neoprene	FS 140 ... 250 FS 280 ... 440	Neoprene		Neoprene	
	Die-cast aluminum Die-cast copper	FS 140 ... 440 FS 140 ... 250	Die-cast aluminum Die-cast copper	FS 140 ... S440 FS 140 ... 250	Die-cast aluminum Die-cast copper	FS 140 ... S440 FS 140 ... 250
	Copper – random wound		Copper – random wound		Copper – random wound	
	High-strength carbon steel	C1045	High-strength carbon steel	C1045	High-strength carbon steel	C1045
	V-ring slinger meets IP54	(DE only)	V-ring slinger meets IP54	(DE, NDE)	Inpro/seal bearing insulation meets IP55	(DE, NDE)
	Cast iron	FS 140 ... 440	Cast iron	FS 140 ... S440	Cast iron	FS 140 ... S440
	Double-shielded Regreasable inlet and outlet	(FS 440 only)	Double-shielded Single-shielded Regreasable inlet and outlet	FS 140 ... 250 FS 280 ... S440	Double-shielded Single-shielded Regreasable inlet and outlet	FS 140 ... 250 FS 280 ... S440
	No		Cast iron		Cast iron	
	Polyurea	Base grease	Polyurea	Base grease	Polyurea	Base grease
	Alemite	FS 440 only	Alemite		Alemite	
	Plug	FS 440 only	Plug		Pressure relief (automatic)	
	0.15 IPS		0.08 IPS		0.06 IPS	
	Aluminum	Engraved	Stainless steel	Engraved	Stainless steel	Embossed
	Condensation drainage holes – lowest point (2)		T discharges – lowest point (2)		T discharges – lowest point (2)	
	Rust-resistant		Rust-resistant		Rust-resistant	
	Included	> 75 lb (> 34.0 kg)	Included	> 75 lb (> 34.0 kg)	Included	
	ALKYED modified	RAL7030	ALKYED modified	RAL7030	ALKYED modified	RAL7030
	18 months		36 months		60 months	
	VT 20:1 CT 4:1 CT 10:1	FS 140 ... 440 FS 140 ... 440 FS 140 ... 250 (Cu)	CT 20:1 CT 4:1 CT 10:1	FS 143 ... 365 FS 140 ... 440 FS 140 ... 250 (Cu)	CT 20:1 CT 4:1 CT 10:1	FS 143 ... 365 FS 140 ... 440 FS 140 ... 250 (Cu)
	D 81.2, US/Canada		**D 81.2, US/Canada**		**D 81.2, US/Canada**	

© Siemens AG 2015

Motors according to NEMA standard

	Explosion Proof				Definite Purpose	
						
	XP100		**XP100 ID1**		**SD10 MS**	
Power range	1 ... 300 hp (0.75 ... 200 kW)	FS 140 ... 440	1 ... 300 hp (0.75 ... 200 kW)	FS 140 ... 440	1 ... 200 hp (0.75 ... 160 kW)	4/8-pole – 1W VT
Frame size (FS)	140 ... 440		140 ... 440		140 ... 440	
Degree of protection NEMA MG1	TEFC (totally enclosed fan cooled)		TEFC (totally enclosed fan cooled)		TEFC (totally enclosed fan cooled)	
Housing material	Cast iron	8-hole foot	Cast iron	8-hole foot	Cast iron	8-hole foot
Efficiency	NEMA Premium	FS 140 ... 440	NEMA Premium	FS 140 ... 440	Standard	FS 140 ... 440
Power supply	3-phase, 60 Hz		3-phase, 60 Hz		3-phase, 60 Hz	
Voltage	208 ... 230/460 V 230/460 V 460 V 575 V	1 ... 20 hp 25 ... 100 hp 125 ... 300 hp 1 ... 300 hp	208 ... 230/460 V 230/460 V 460 V 575 V	1 ... 20 hp FS 280 ... 100 hp 125 ... 300 hp 1 ... 300 hp	460 V 575 V	FS 140 ... 440 FS 140 ... 440
Service factor	1.0	Sinusoidal	1.0	Sinusoidal	1.0	Sinusoidal
Electrical design	NEMA design B		NEMA design B		Not specified	
Hazard classification	CL I Gr. C&D, CL II F&G Div 1	Max. code T3C	CL I Gr. D, Div 1	Max. code T2A	Not specified	
Insulation	Class F	NEMA MG1 Part 31	Class F	NEMA MG1 Part 31	Class F	NEMA MG1 Part 31
Utilization	Class B at 1.0 SF, Class F at 1.15 SF	Sinusoidal	Class B at 1.0 SF, Class F at 1.15 SF	Sinusoidal not with 300, 250 hp, 4-pole	Class B at 1.0 SF, Class F at 1.15 SF	Sinusoidal not with 300, 250 hp, 4-pole
Terminal box (oversized)	Cast iron		Cast iron	FS 140 ... 440	Cast iron	FS 140 ... 440
Fan cover	Cast iron	FS 140 ... 440	Cast iron	FS 140 ... 440	Cast iron	FS 140 ... 440
Fan	Bi-directional - Polypropylene	FS 140 ... 440	Bi-directional - Polypropylene	FS 140 ... 440	Bi-directional - Polypropylene	FS 140 ... 440
Seal	Neoprene		Not specified	(lead seal)	Neoprene	
Rotor material	Die-cast aluminum		Die-cast aluminum		Die-cast aluminum	FS 140 ... 440
Stator winding	Copper – random wound NC protective device	FS 140 – 440 Included	Copper – random wound NC protective device	FS 140 – 440 Not specified	Copper – random wound	FS 140 ... 440
Shaft material	High-strength carbon steel	C1045	High-strength carbon steel	C1045	High-strength carbon steel	C1045
Shaft seal/ slinger	V-ring slinger meets IP54	(DE, NDE)	V-ring slinger meets IP54	(DE, NDE)	V-ring slinger meets IP54	(DE, NDE)
Bearing housing	Cast iron	FS 140 ... 440	Cast iron		Cast iron	FS 140 ... 440
Bearing type	Double-shielded Regreasable inlet and outlet	FS 140 ... 440	Double-shielded Regreasable inlet and outlet	FS 140 ... 440	Double-shielded Single-shielded Regreasable inlet and outlet	FS 140 ... 250 FS 280 ... S440
Bearing inner cap	Cast iron	FS 140 ... 440	Cast iron	FS 140 ... 440	Cast iron	FS 140 ... 440
Lubrication	Polyurea	Base grease	Polyurea	Base grease	Polyurea	Base grease
Oil filling nozzle	Alemite		Alemite		Alemite	
Oil drain valve	Plug		Plug		Plug	
Vibrations	0.08 IPS		0.08 IPS		0.08 IPS	
Rating plate	Stainless steel	Engraved	Stainless steel	Engraved	Stainless steel	Engraved
Condensation drainage hole	UL certification	FS 280 ... 440	UL certification	FS 280 ... 440	T discharges – lowest point (2)	
Mountings	Rust-resistant		Rust-resistant		Rust-resistant	
Eyebolt	Included	> 75 lb (> 34.0 kg)	Included	> 75 lb (> 34.0 kg)	Included	> 75 lb (> 34.0 kg)
Paint	ALKYED modified	RAL7030	ALKYED modified	RAL7030	ALKYED modified	RAL7030
Warranty	36 months		36 months		36 months	
Converter operation	VT 20:1 CT 4:1	FS 140 ... 440 FS 140 ... 320	VT 20:1 CT 4:1	FS 140 ... 440 FS 140 ... 440	Not specified	
Catalog	**D 81.2, US/Canada**		**D 81.2, US/Canada**		**D 81.2, US/Canada**	

© Siemens AG 2015

Your machines and plant can do more – with Industry Services.



Whether it is production or process industry - in view of rising cost pressure, growing energy costs, and increasingly stringent environmental regulations, services for industry are a crucial competitive factor in manufacturing as well as in process industries.

All over the world Siemens supports its customers with product, system, and application-related services throughout the entire life cycle of a plant. Right from the earliest stages of planning, engineering, and building, all the way to operation and modernization. These services enable customers to benefit from the Siemens experts' unique technological and product knowledge and industry expertise.

Thus downtimes are reduced and the utilization of resources is optimized. The bottom line: increased plant productivity, flexibility, and efficiency, plus reduced overall costs.

Discover all advantages of our service portfolio:
www.siemens.com/industry-services

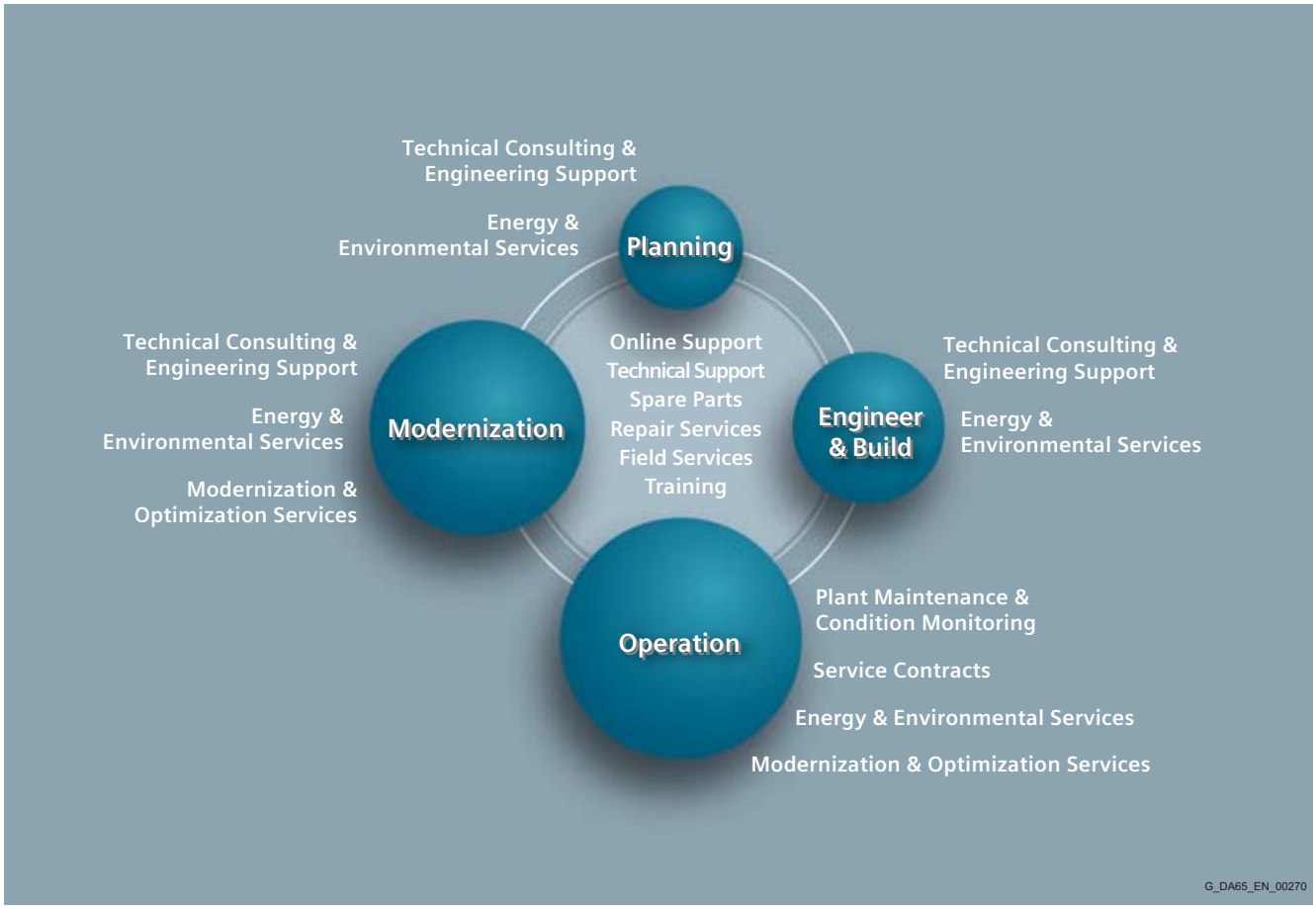

Siemens supports its clients with technology based Services across a plants entire life cycle.

© Siemens AG 2015

Industry Services for the entire life cycle

Online Support

Online support is a comprehensive information system for all questions relating to products, systems, and solutions that Siemens has developed for industry over time. With more than 300,000 documents, examples and tools, it offers users of automation and drive technology a way to quickly find up-to-date information. The 24-hour service enables direct, central access to detailed product information as well as numerous solution examples for programming, configuration and application.

The content, in six languages, is increasingly multimediabased – and now also available as a mobile app. Online support's "Technical Forum" offers users the opportunity to share information with each other. The "Support Request" option can be used to contact Siemens' technical support experts. The latest content, software updates, and news via newsletters and Twitter ensure that industry users are always up to date.



www.siemens.com/industry/onlinesupport

Online Support App

Using the Online Support app, you can access over 300,000 documents covering all Siemens industrial products - anywhere, any time. Regardless of whether you need help implementing your project, fault-finding, expanding your system or are planning a new machine.

You have access to FAQs, manuals, certificates, characteristics curves, application examples, product notices (e.g. announcements of new products) and information on successor products in the event that a product is discontinued.

Just scan the product code printed on the product directly using the camera of your mobile device to immediately see all technical information available on this product at a glance. The graphical CAx information (3D model, circuit diagrams or EPLAN macros) is also displayed. You can forward this information to your workplace using the e-mail function.

The search function retrieves product information and articles and supports you with a personalized suggestion list. You can find your favorite pages – articles you need frequently – under "mySupport". You also receive selected news on new functions, important articles or events in the News section.

Scan the QR code for information on our Online Support app.

The app is available free of charge from the Apple App Store (iOS) or from Google Play (Android).

www.siemens.com/industry/onlinesupportapp

Technical Support

The ability to quickly analyze system and error messages and take appropriate action are key factors in ensuring that plants run safely and efficiently. Questions can arise at any time and in any industry, whether it's an individual product or a complete automation solution. Siemens technical support offers individual technical assistance in matters related to functionality, how to operate, applications, and fault clearance in industrial products and systems – at any time and globally, over the phone, by e-mail, or via remote access. Experienced experts from Siemens answer incoming questions promptly. Depending on the requirements, they first consult specialists in the areas of development, on-site services, and sales. Technical support is also available for discontinued products that are no longer available. Using the support request number, any inquiry can be clearly identified and systematically tracked.



http://support.automation.siemens.com/WW/view/en/16605032

© Siemens AG 2015

Spare Parts

Drive and automation systems must be available at all times. Even a single missing spare part can bring the entire plant to a standstill – and result in substantial financial losses for the operator. The spare parts services from Siemens protects against such losses – with the aid of quickly available, original spare parts that ensure smooth interaction with all other system components. Spare parts are kept on hand for up to ten years; defective parts can be returned. For many products and solutions, individual spare parts packages ensure a preventive stock of spare parts on-site. The spare parts services is available around the world and around the clock. Optimum supply chain logistics ensure that replacement components reach their destination as quickly as possible. Siemens' logistics experts take care of planning and management as well as procurement, transportation, customs handling, warehousing, and complete order management for spare parts.



http://support.automation.siemens.com/WW/view/en/43502238

Repair Services

Reliable electrical and electronic equipment is crucial for operating continuous processes. That is why it is essential that motors and converters always undergo highly specialized repair and maintenance. Siemens offers complete customer and repair services – on site and in repair centers – as well as technical emergency services worldwide. The repair services include all measures necessary to quickly restore the functionality of defective units. In addition, services such as spare parts logistics, spare parts storage and rapid manufacturing are available to plant operators in all verticals. With a global network of certified repair shops operated by Siemens as well as third parties, Siemens handles the maintenance and overhaul of motors, converters, and other devices as an authorized service partner.



http://support.automation.siemens.com/WW/view/en/16610214

Field Services

It's a top priority in all industries: the availability of plants and equipment. Siemens offers specialized maintenance services such as inspection and upkeep as well as rapid fault clearance in industrial plants – worldwide, continuously, and even with emergency services as needed. The services include startup as well as maintenance and fault clearance during operation. The startup service includes checking the installation, function tests, parameterization, integration tests for machines and plants, trial operation, final acceptance, and employee training. All services, including remote maintenance of drives, are also available as elements of customized service contracts.



http://support.automation.siemens.com/WW/view/en/66012486

© Siemens AG 2015

Industry Services for the entire life cycle

Training

Increasingly, up-to-date knowledge is becoming a determining factor in success. One of the key resources of any company is well-trained staff that can make the right decision at the right moment and take full advantage of the potential. With SITRAIN – Training for Industry, Siemens offers comprehensive advanced training programs. The technical training courses convey expertise and practical knowledge directly from the manufacturer. SITRAIN covers Siemens' entire product and system portfolio in the field of automation and drives. Together with the customer, Siemens determines the company's individual training needs and then develops an advanced training program tailored to the desired requirements. Additional services guarantee that the knowledge of all Siemens partners and their employees is always up-to-date.



http://support.automation.siemens.com/WW/view/en/43514324

Technical Consulting & Engineering Support

The efficiency of plants and processes leads to sustainable economic success. Individual services from Siemens help save substantial time and money while also guaranteeing maximum safety. Technical consulting covers the selection of products and systems for efficient industrial plants. The services include planning, consulting, and conceptual design as well as product training, application support, and configuration verification – in all phases of a plant's lifecycle and in all questions related to product safety. Engineering support offers competent assistance throughout the entire project, from developing a precise structure for startup to product-specific preparation for implementation as well as support services in areas such as prototype development, testing and acceptance.



http://support.automation.siemens.com/WW/view/en/16605680

Energy & Environmental Services

Efficient energy use and resource conservation – these top sustainability concerns pay off – both for the environment and for companies. Siemens offers integrated solutions that unlock all technical and organizational potential for successful environmental management. Customized consulting services are aimed at sustainably lowering the cost of energy and environmental protection and thus increasing plant efficiency and availability. The experts provide support in the conceptual design and implementation of systematic solutions in energy and environmental management, enabling maximum energy efficiency and optimized water consumption throughout the entire company. Improved data transparency makes it possible to identify savings potential, reduce emissions, optimize production processes, and thereby noticeably cut costs.



http://support.automation.siemens.com/WW/view/en/42350774

© Siemens AG 2015

Modernization & Optimization Services

High machine availability, expanded functionality and selective energy savings – in all industries, these are decisive factors for increasing productivity and lowering costs. Whether a company wants to modernize individual machines, optimize drive systems, or upgrade entire plants, Siemens' experts support the projects from planning to commissioning.

Expert consulting and project management with solution responsibility lead to security and make it possible to specifically identify savings potential in production. This secures investments over the long term and increases economic efficiency in operation.



http://support.automation.siemens.com/WW/view/en/66005532

Plant Maintenance & Condition Monitoring

Modern industrial plants are complex and highly automated. They must operate efficiently in order to ensure the company's competitive strength. In addition, the steadily increasing networking of machines and plants require consistent security concepts. Maintenance and status monitoring as well as the implementation of integrated security concepts by Siemens' experts support optimum plant use and avoid downtime. The services include maintenance management as well as consulting on maintenance concepts, including the complete handling and execution of the necessary measures. Complete solutions also cover remote services, including analysis, remote diagnosis, and remote monitoring. These are based on the Siemens Remote Services platform with certified IT security.



http://support.automation.siemens.com/WW/view/en/59456862

Service Contracts

Making maintenance costs calculable, reducing interfaces, speeding up response times, and unburdening the company's resources – the reduced downtimes that these measures achieve increase the productivity of a plant. Service contracts from Siemens make maintenance and repairs more cost-effective and efficient. The service packages include local and remote maintenance for a system or product group in automation and drive technology. Whether you need extended service periods, defined response times, or special maintenance intervals, the services are compiled individually and according to need. They can be adjusted flexibly at any time and used independently of each other. The expertise of Siemens' specialists and the capabilities of remote maintenance thus ensure reliable and fast maintenance processes throughout a plant's entire lifecycle.



http://support.automation.siemens.com/WW/view/en/65961857

© Siemens AG 2015

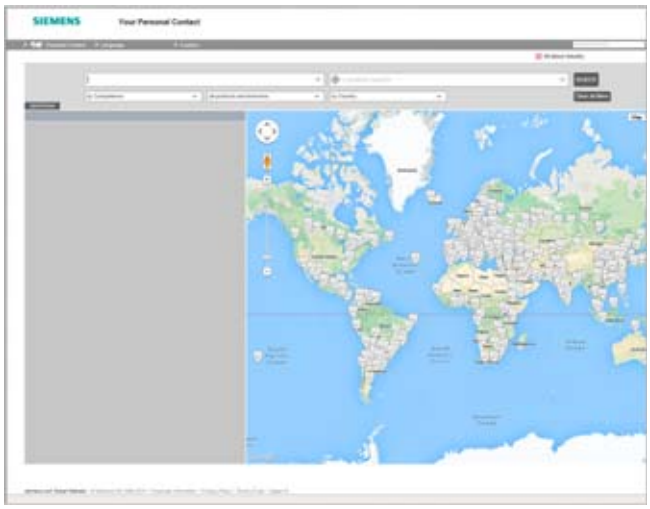



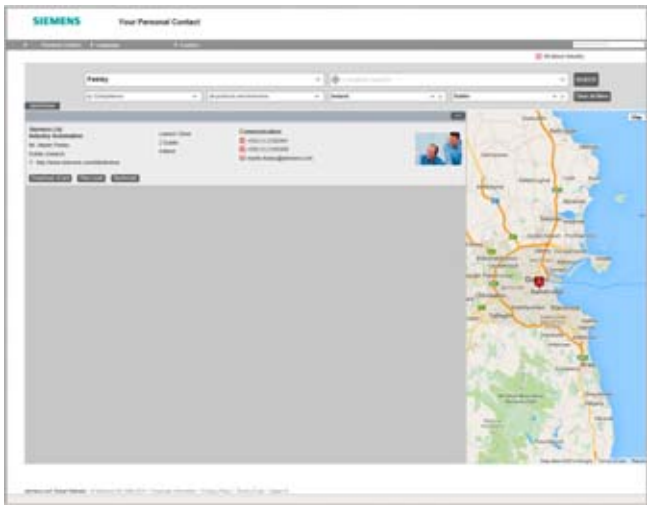

At Siemens we are resolutely pursuing the same goal: long-term improvement of your competitive ability.
We are committed to this goal. Thanks to our commitment, we continue to set new standards in automation and drive technology. In all industries – worldwide.

At your service locally, around the globe for consulting, sales, training, service, support, spare parts ... on the entire Industry Automation and Drive Technologies range.

Your personal contact can be found in our Contacts Database at:
www.siemens.com/automation/partner

You start by selecting

- the required competence,
- products and branches,
- a country,
- a city

or by a

- location search or
- person search.

© Siemens AG 2015

The Future of Manufacturing on the Internet

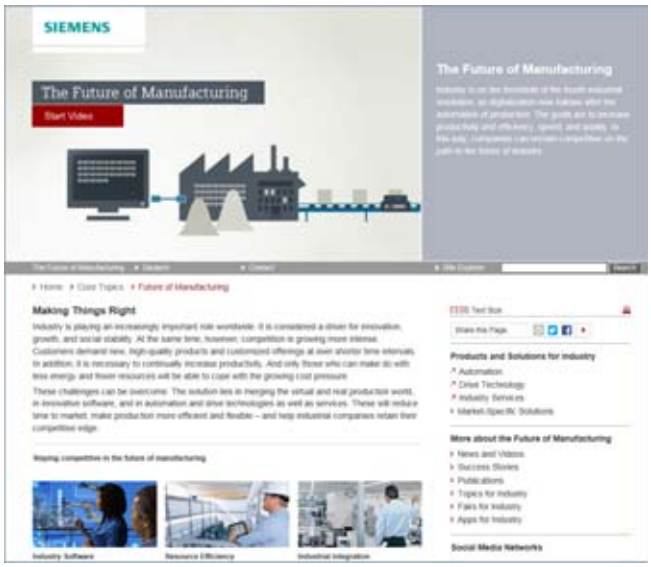

Detailed knowledge of the range of products and services available is essential when planning and engineering automation systems. It goes without saying that this information must always be as up-to-date as possible.

Industry is on the threshold of the fourth industrial revolution as digitization now follows after the automation of production. The goals are to increase productivity and efficiency, speed, and quality. In this way, companies can remain competitive on the path to the future of industry.

You will find everything you need to know about products, systems and services on the internet at:

www.siemens.com/industry

Product Selection Using the Interactive CA 01 Automation and Drives Catalog



Detailed information together with user-friendly interactive functions:
The CA 01 interactive catalog covers more than 100,000 products, thus providing a comprehensive overview of the product range provided by Siemens.

You will find everything you need here for solving tasks in the fields of automation, switching, installation and drives.
All information is provided over a user interface that is both user-friendly and intuitive.

You can order the CA 01 product catalog from your Siemens sales contact or in the Information and Download Center:

www.siemens.com/industry/infocenter

Information about the CA 01 interactive catalog can be found on the Internet at:

www.siemens.com/automation/ca01

or on DVD.

Easy Shopping with the Industry Mall



The Industry Mall is the electronic ordering platform of Siemens AG on the Internet. Here you have online access to a huge range of products presented in an informative and attractive way.

Data transfer via EDIFACT allows the whole procedure, from selection through ordering to tracking and tracing, to be carried out online. Availability checks, customer-specific discounts and bid creation are also possible.

Numerous additional functions are provided for your support. For example, powerful search functions make it easy to select the required products. Configurators enable you to configure complex product and system components quickly and easily. CAx data types are also provided here.

You can find the Industry Mall on the Internet at:

www.siemens.com/industrymall

© Siemens AG 2015

Downloading Catalogs

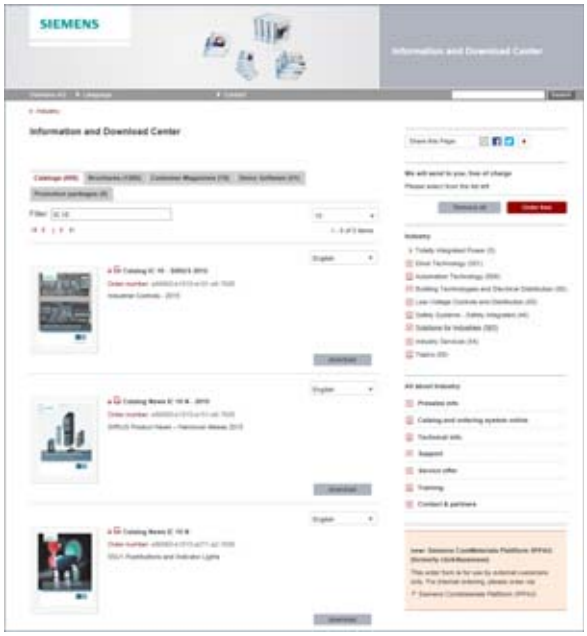

In addition to numerous other useful documents, you can also find the catalogs listed on the back inside cover of this catalog in the Information and Download Center. You can download these catalogs in PDF format without having to register.

The filter dialog above the first catalog displayed makes it possible to carry out targeted searches. If you enter "MD 3" for example, you will find both the MD 30.1 and MD 31.1 catalogs. If you enter "IC 10", both the IC 10 catalog and the associated news or add-ons are displayed.

Visit us at:

www.siemens.com/industry/infocenter

© Siemens AG 2015

Overview



The SIZER WEB ENGINEERING tool is used to engineer motors, converters/inverters and drive systems for a broad spectrum of applications within a wide power range starting below 1 kW up to 30 MW and above. To engineer a solution, you need to enter parameters for the motor, converter/inverter or the system – as well as parameters for your own specific application.

When the process is complete, you will receive comprehensive technical documentation (e.g. 3D models) including price information.

An inquiry function integrated in SIZER WEB ENGINEERING allows you to design special solutions for your drive task.

SIZER WEB ENGINEERING fully supports you from the inquiry stage, through the process of engineering products and drive systems, until your own individual quotation is ready. It supplies pricing information and then transfers the engineered products to your shopping cart in the Industry Mall. Seamless support during the engineering process enables you to save time and increase your productivity because you only need to enter the data once. You can use the entered data and the result as a basis for inquiries and orders.

SIZER WEB ENGINEERING is the platform for flexible engineering of your drive tasks and user-friendly management of your projects in conjunction with the engineering tools Drive Technology Configurator and SIZER for Siemens Drives.

Function



You can quickly find a solution for your drive task with the web-based tool: menu-prompted workflows navigate you through the technical selection and dimensioning of products and drive systems, including the accessories. Based on an integrated inquiry functionality, SIZER WEB ENGINEERING also offers you special customized solutions for applications which cannot be addressed using "Standard Products", i.e. the focus is on flexibility and customized solutions.

Furthermore, you can engineer high-voltage motors, medium-voltage systems and rectifiers for your projects in addition to products from the low-voltage range. Integral tool functions also include comprehensive documentation such as data sheets, start-up calculations for low and high-voltage motors, 2D dimensional drawings and 3D CAD models, offer documentation to name just a few.

Access to the engineering tool

SIZER WEB ENGINEERINGSIZER WEB ENGINEERING is available at the following website after registration and release:
www.siemens.com/sizer-we

More information

- Further information on the SIZER WEB ENGINEERING engineering tool is available on the Internet at www.siemens.com/sizer-we
- Home page Selection and Engineering Tools: http://www.siemens.com/engineering-tools

© Siemens AG 2015

Drive Technology Configurator selection tool

Overview

The Drive Technology (DT) Configurator supports you when configuring the optimum drive technology products for your application – starting with gear units, motors, inverters as well as the associated options and components and ending with controllers, software licenses and connection systems. With or without detailed knowledge of products: preselected product groups, deliberate navigation through selection menus and direct product selection through entry of the product number support quick, efficient and convenient configuration.

In addition to all this, comprehensive documentation comprising technical data sheets, 2D/3D dimensional drawings, operating instructions, certificates, etc. can be selected in the DT Configurator. Immediate ordering is possible by simply transferring a parts list to the shopping cart of the Industry Mall.

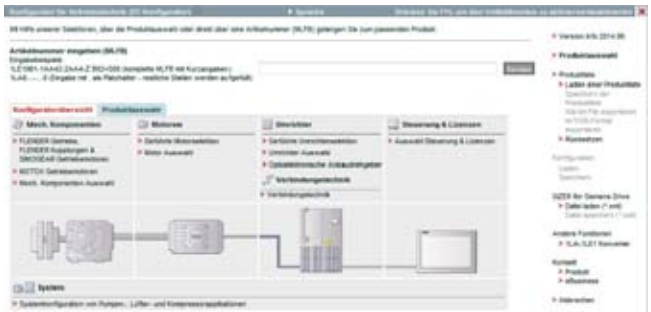

Drive Technology Configurator for efficient drive configuration with the following functions

- Fast, efficient configuration of drive products and associated components – gear units, motors, inverters, controllers, connection systems
- Configuration of drive systems for pumps, fans and compressor applications from 1 kW to 2.6 MW
- Displayable documentation for configured products and components, such as
  - Data sheets in up to 7 languages in PDF or RTF format
  - 2D/3D dimensional drawings in various formats
  - Terminal box drawing and terminal connection diagram
  - Operating instructions
  - Certificates
  - Start-up calculation for SIMOTICS motors
  - EPLAN macros
- Support with retrofitting in conjunction with Spares On Web (www.siemens.com/sow)
- Ability to order products directly in the Siemens Industry Mall

Access to the Drive Technology Configurator

The Drive Technology Configurator can be called up without registration and without a login:
www.siemens.com/dt-configurator

Selection and ordering data

Description	Article No.
Interactive Catalog CA 01 on DVD-ROM including Drive Technology Configurator, German	**E86060-D4001-A510-D6-7600**

More information

Online access to Drive Technology Configurator

More information about the Drive Technology Configurator is available on the Internet at
www.siemens.com/dtconfigurator

Offline access to the Drive Technology Configurator in the Interactive Catalog CA 01

In addition, the Drive Technology Configurator is also included in the Interactive Catalog CA 01 on DVD-ROM - the offline version of the Siemens Industry Mall.
The Interactive Catalog CA 01 can be ordered from the relevant Siemens sales office or via the Internet:
www.siemens.com/automation/CA01

© Siemens AG 2015

Overview

The SinaSave energy efficiency tool determines energy saving potential and amortization times based on your individual conditions of use and therefore offers practical assistance in making decisions about investments in energy-efficient technologies.

In SinaSave Version 6.0 and higher, the drive systems to be compared and the relevant drive component parameters are displayed graphically. An additional expansion is the numerous comparison possibilities for different control types and comprehensive product combinations for drive solutions for pump and fan applications. In addition to SIMOTICS motors and SINAMICS converters/inverters, the product portfolio comprises SIRIUS controls, offering a comprehensive range of comparison possibilities – according to your individual requirements.



SinaSave offers numerous comparison possibilities:

- Comparison of drive systems for pump and fan applications with
  - Reactor control (fixed speed; motor and switchgear)
  - Bypass control (fixed speed; motor and switchgear)
  - Speed control (variable speed; motor and inverter)
- Comparison and evaluation of products of different energy efficiency classes
- Comparison of Siemens drive systems with drive components from other manufacturers



Access to the SinaSave energy efficiency tool

SinaSave can be accessed without the need for registration or logging in:
www.automation.siemens.com/sinasave

More information

For more information about the amortization calculator for energy-efficient drive systems, visit
www.siemens.com/sinasave

More information about services for energy saving is available on the Internet at
www.siemens.com/energy-saving

© Siemens AG 2015

SIMOTICS EE-COMPARATOR

Overview

The SIMOTICS EE-COMPARATOR app enables you to calculate potential savings and amortization times by making direct comparisons between Siemens SIMOTICS low-voltage motors in line or converter operation. In line operation, motors with different IE classifications (IE1, IE2, IE3 and IE4) can be compared taking individual operating periods and motor loads into account. In the new module for converter operation, a sample pump application enables you to identify the most cost-effective drive system based on load profiles.

The Regulations module provides you with information about local minimum efficiency requirements (so-called MEPS – Minimum Efficiency Performance Standards) of low-voltage induction motors for selected countries.

You can send the results calculated by the SIMOTICS EE-COMPARATOR directly from the app by e-mail.

New with version V1.3.1:

- New module for calculating the most efficient drive system in converter operation
- Partial-load efficiency calculations have been added to the line operation module
- New countries:
  - Australia
  - Chile
  - Peru
  - Philippines
  - Saudi Arabia
  - Switzerland
  - South Africa
  - Taiwan

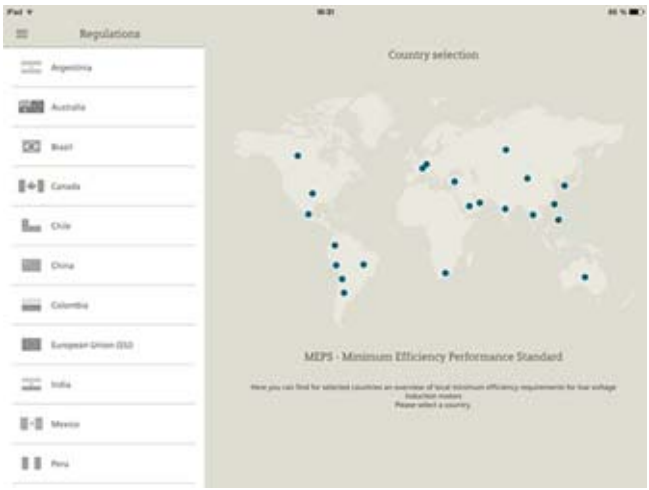



More information

Access to the SIMOTICS EE-COMPARATOR app:
www.siemens.com/simotics-ee-comparator

Download on the App Store

ANDROID APP ON Google play

© Siemens AG 2015

Overview

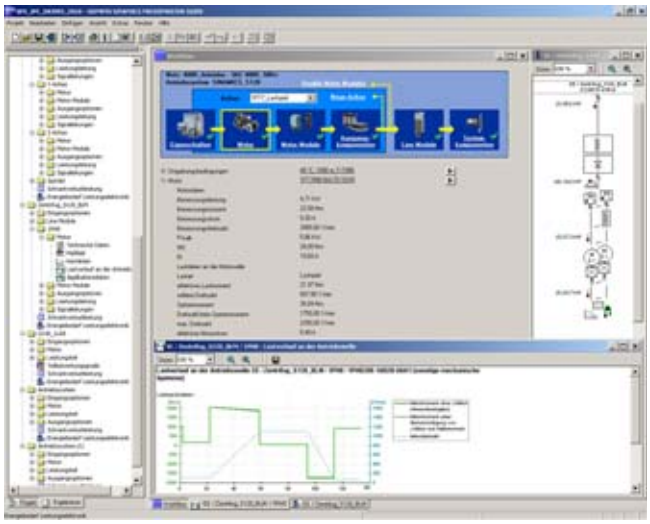

The following drives and controls can be engineered in a user-friendly way using the SIZER for Siemens Drives configuration tool:

- SIMOTICS low-voltage motors including servo geared motors
- SINAMICS low-voltage drive systems
- Motor starters
- SINUMERIK CNCs
- SIMOTION Motion Control System
- SIMATIC Technology

It provides support when selecting the technologies involved in the hardware and firmware components required for a drive task. SIZER for Siemens Drives covers the full range of operations required to configure a complete drive system, from basic single drives to complex multi-axis applications.

SIZER for Siemens Drives supports all of the engineering steps in a workflow:

- Configuring the power supply
- Designing the motor and gearbox, including calculation of mechanical transmission elements
- Configuring the drive components
- Selecting the required accessories
- Selecting the line-side and motor-side power options, e.g. cables, filters, and reactors

When SIZER for Siemens Drives was being designed, particular importance was placed on a high degree of usability and a universal, function-based approach to the drive application. The extensive user guidance makes using the tool easy. Status information keeps you continually informed about the progress of the configuration process.

The SIZER for Siemens Drives user interface is available in English, French, German and Italian.

The drive configuration is saved in a project. In the project, the components and functions used are displayed in a hierarchical tree structure.

The project view permits the engineering of drive systems and the copying/inserting/modifying of drives already configured.

The configuration process produces the following results:

- A parts list of the required components (export to Excel, use of the Excel data sheet for import to SAP)
- Technical specifications of the system
- Characteristic curves
- Comments on system reactions
- Mounting arrangement of drive and control components and dimensional drawings of motors
- Energy requirements of the configured application

These results are displayed in a results tree and can be reused for documentation purposes.

Support is provided by the technological online help menu:

- Detailed technical specifications
- Information about the drive systems and their components
- Decision-making criteria for the selection of components
- Online help in English, French, German, Italian, Chinese and Japanese

System requirements

- PG or PC with Pentium III min. 800 MHz (recommended > 1 GHz)
- 512 MB RAM (1 GB RAM recommended)
- At least 4.1 GB of free hard disk space
- An additional 100 MB of free hard disk space on the Windows system drive
- Screen resolution 1024 × 768 pixels (1280 × 1024 pixels recommended)
- Operating system:
  - Windows 7 Professional (32/64 bit)
  - Windows 7 Enterprise (32/64 bit)
  - Windows 7 Ultimate (32/64 bit)
  - Windows 7 Home (32/64 bit)
  - Windows 8.1 Professional (32/64 bit)
  - Windows 8.1 Enterprise (32/64 bit)
- Microsoft Internet Explorer V5.5 SP2

Selection and ordering data

Description	Article No.
SIZER for Siemens Drives configuration tool on DVD-ROM English, French, German, Italian	**6SL3070-0AA00-0AG0**

More information

The SIZER for Siemens Drives engineering tool is available free on the Internet at:
www.siemens.com/sizer

© Siemens AG 2015

SIPLUS CMS condition monitoring systems for the continuous condition monitoring of motors

Overview

The SIPLUS CMS condition monitoring systems continuously monitor the condition of wear-prone drive components such as motors. Depending on the system, individual motors can be monitored as well as complete drive trains, or even the entire plant. IEPE sensors are used for acquisition of the motor vibrations for analysis, visualization and archiving by SIPLUS CMS. Information is supplied regularly and event-driven – even in remote operation. SIPLUS CMS can also be retrofitted.

More information on SIPLUS CMS is available on the Internet at:
www.siemens.com/siplus-cms

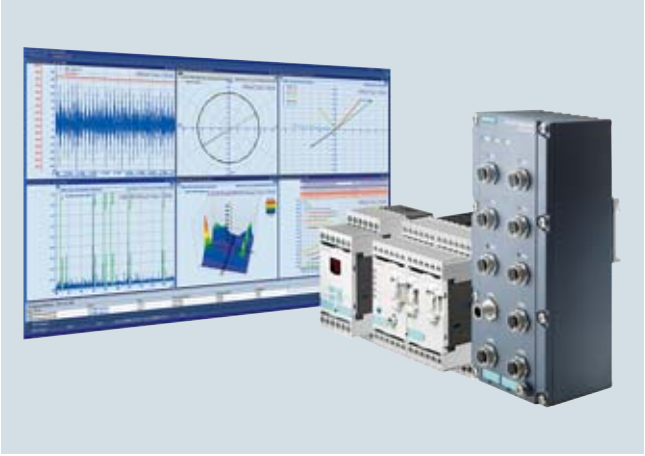

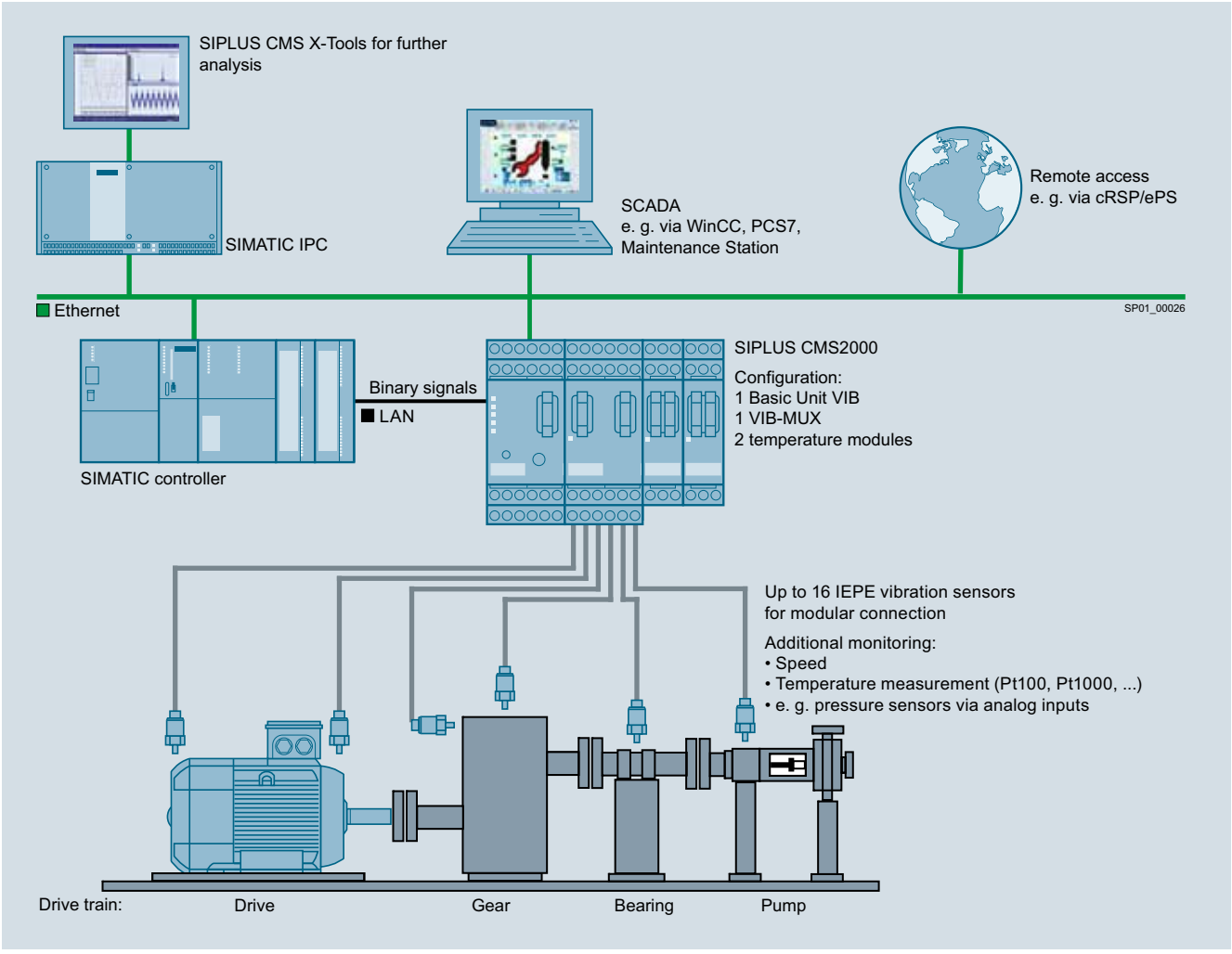

© Siemens AG 2015

Numerical

1XP8 012 rotary pulse encoder 1/82

A

Acceptance test certificate 5/46
Accessories 2/88, 4/38, 5/26, 5/67
Additional versions 1/81
Admissible axial load 1/60
Admissible axial load 1/60
Admissible cantilever forces 1/54
Admissible cantilever forces 1/54
Aluminum series spectrum 1/6
Ambient temperature 1/72
Answers for industry 2
Appendix 6/1
Article number code 2/7, 4/8, 5/7
Article number index 6/23

B

Balance 1/46
Basic versions 1/82
Bearing plates 5/4
Bearings 1/49, 5/5, 5/53
Brakes 1/74

C

Cast-iron series 1PC1443 self-ventilated 5/58
Cast-iron series 1PC1463 self ventilated 5/60
Cast-iron series spectrum 1/7
Catalog orientation 1/4
Certifications 1/18, 4/3
Circuit 1/35
Classification of zones 4/2
Classification societies 5/42
Colors 1/14
COMPARATOR 6/16
Condition monitoring of motors 6/18
Condition Monitoring 6/9
Conditions of sale and delivery, Export regulations 6/36
- Additional Terms and Conditions 6/36
- Export regulations 6/36
- General Provisions 6/36
- Prices 6/36

Configurator 6/14
Connection box 1/35
Connection system 5/4
Converter operation 2/6, 4/6, 5/46
Coolant temperature 1/72, 4/7, 5/46
Currents 1/25
Cut-away diagram of a low-voltage motor 1/13

D

Degree of protection 5/46, 5/53
Degrees of protection 1/44
Designs in accordance with standards and specifications 1/18
Diagrams of bearings 1/54
Dimension sheet generator 2/91, 4/41, 5/29, 5/69
Dimensions and weights Special technology 1/87
Dimensions 2/89, 4/40, 5/28, 5/68
- Aluminum series 2/92, 4/42, 5/30
  - 1LE1001, 1LE1002 Self-ventilated, with increased output, frame sizes 80 M to 200 L 2/94
  - 1LE1001, 1LE1002, 1LE1011, 1LE1012, 1LE1021 Self-ventilated, frame sizes 100 L (80 M) to 200 L 2/92
  - 1LE1001, 1PC1001, 1LE1002, 1PC1002, 1LE1021 Forced-air cooled/naturally cooled, frame sizes 80 M to 200 L 2/96
  - 1LE1003 Self-ventilated, with increased output, frame sizes 100 L to 200 L 2/102
  - 1LE1003, 1LE1023 Self-ventilated, frame sizes 80 M to 90 L 2/98
  - 1LE1003, 1LE1023 Self-ventilated, frame sizes 100 L to 200 L 2/100
  - 1LE1004 Self-ventilated, frame sizes 100 L to 160 L 2/108
  - 1LE1023, 1LE1043 Forced-air cooled, frame sizes 80 M to 90 L 2/104
  - 1LE1023, 1LE1043 Forced-air cooled, frame sizes 100 L to 200 L 2/106
  - 1MB1011, 1MB1012, 1MB1021, 1MB1022, 1MB1031, 1MB1032 self-ventilated, frame sizes 80 M to 160 L 4/42
  - 1MB1013, 1MB1023, 1MB1033 self-ventilated, frame sizes 80 M to 160 L 4/44
  - 1PC1300, 1PC1303 self ventilated, frame sizes 80 M to 160 L 5/30
  - 1PC1300, 1PC1303 forced-air cooled, frame sizes 80 M to 160 L 5/32
- Cast-iron series 2/110, 4/46, 5/34, 5/70
  - 1LE1501, 1LE1521, 1LE1541, 1LE1601, 1LE1621 Self-ventilated, frame sizes 71 M to 160 L 2/110
  - 1LE1501, 1LE1521, 1LE1541, 1LE1601, 1LE1621 Self-ventilated, frame sizes 180 M to 250 M 2/112
  - 1LE1501, 1LE1521, 1LE1541, 1LE1601, 1LE1621 Self-ventilated, frame sizes 280 S to 315 L 2/114
  - 1LE1503, 1LE1523, 1LE1543, 1LE1603, 1LE1623, 1LE1643 Self-ventilated, frame sizes 71 M to 160 L 2/116
  - 1LE1503, 1LE1523, 1LE1543, 1LE1603, 1LE1623, 1LE1643 Self-ventilated, frame sizes 180 M to 315 L 2/118
  - 1LE1504, 1LE1604 Self-ventilated, frame sizes 100 L to 160 L 2/120
  - 1LE1504, 1LE1604 Self-ventilated, frame sizes 180 M to 315 L 2/122
  - 1PC1301, 1PC1304 self ventilated, frame sizes 180 M to 250 M 5/34
  - 1PC1301, 1PC1304 self-ventilated, frame sizes 280 S to 315 L 5/36
  - 1PC1301, 1PC1304 forced-air cooled, frame sizes 180 M to 250 M 5/38
  - 1PC1301, 1PC1304 forced-air cooled, frame sizes 280 S to 315 L 5/40
  - 1PC1433, 1PC1443 self-ventilated, frame sizes 112 M to 160 L 5/70
  - 1PC1433, 1PC1443 self-ventilated, frame sizes 180 M to 280 M 5/72
  - 1PC1463 self-ventilated, frame sizes 132 S to 280 M 5/74
  - 1MB1511, 1MB1521, 1MB1531, 1MB1611, 1MB1621, 1MB1631 self-ventilated, frame sizes 100 L to 160 L 4/46
  - 1MB1511, 1MB1521, 1MB1531, 1MB1611, 1MB1621, 1MB1631 self-ventilated, frame sizes 180 M to 250 M 4/48
  - 1MB1511, 1MB1521, 1MB1531, 1MB1611, 1MB1621, 1MB1631 self-ventilated, frame sizes 280 S to 315 L 4/50
  - 1MB1513, 1MB1523, 1MB1533, 1MB1613, 1MB1623, 1MB1633 self-ventilated, frame sizes 100 L to 160 L 4/52
  - 1MB1513, 1MB1523, 1MB1533, 1MB1613, 1MB1623, 1MB1633 self-ventilated, frame sizes 180 M to 315 L 4/54
- Dimension sheet generator 2/91, 4/41, 5/29, 5/69
- Notes on the dimensions 2/91, 4/41, 5/29, 5/69
- Overall dimensions 2/89, 4/40, 5/28, 5/68

© Siemens AG 2015

Subject index

Direction of rotation ... 1/27
Documentation ... 1/17
Download Center ... 6/12
Downloading Catalogs ... 6/12
Drainage holes ... 5/4
Drive selection ... 1/4
Drive Technology Configurator selection tool ... 6/14
Drive Technology Configurator ... 6/14
Duty type ... 5/3

E

Easy Shopping with the Industry Mall ... 6/11
EE-COMPARATOR ... 6/16
Efficiency classes and efficiencies according to IEC 60034-30 ... 1/2
Efficiency ... 1/27
Electrical design ... 5/53
Energy ... 6/8
Engineering Support ... 6/8
Engineering Tool SIZER WEB ENGINEERING ... 6/13
Engineering ... 6/13
Environmental Services ... 6/8
Essential Service for Propulsion ... 5/42
Essential Service ... 5/42
Ex certification EAC for the Eurasian customs union ... 4/7
Export regulations ... 6/36
Extension of liability for defects ... 1/17
Extra rating plates ... 1/26
Eyebolts ... 1/44

F

Fan / fan cowl ... 5/44
Fan cover for textile industry ... 1/30
Field Services ... 6/7
Flange dimensions ... 1/34
Foot design ... 5/53
Frequencies ... 1/25, 5/3

G

Gear mounting ... 1/44
General Information regarding efficiency in accordance with International Efficiency ... 1/2
General Information ... 4/6
General technical specifications ... 1/13
Grease ... 5/5
Guide to selecting and ordering the motors ... 1/4

H

Heating ... 1/30
Higher coolant temperatures ... 5/53
HOG9 D 1024 I rotary pulse encoder ... 1/84
HOG10 D 1024 I rotary pulse encoder ... 1/86
Housing design ... 5/44, 5/53

I

Index of order codes ... 6/24
Indexes ... 6/19
Industry Services ... 6/5
Information and Download Center ... 6/12
Information and Ordering in the Internet and on DVD ... 6/11
Information Center ... 6/12
Installation altitude ... 1/72
Insulation system ... 5/4
Insulation ... 1/28, 5/53
Integrated Drive Systems ... 8
Introduction ... 1/1

L

Liability for defects ... 1/17
LL 861 900 220 rotary pulse encoder ... 1/83
Loading on the shaft extension ... 5/5
Low-voltage motor, cut-away diagram ... 1/13
Lubrication ... 1/49

M

Marine motors ... 5/42
Mechanical design ... 1/44
Mechanical limit speeds ... 1/50
Metal factor ... 6/35
Metal surcharges ... 6/33
Minimum cooling air flow ... 1/31
Minimum cooling air flow ... 6/9
Modular technology ... 1/73
- Brakes ... 1/74
- 1XP8 012 rotary pulse encoder ... 1/82
- Separately driven fan ... 1/73
- Basic versions ... 1/82
- Additional versions ... 1/81

Motor connection ... 1/35, 5/44, 5/53
Motor protection ... 1/22, 2/70, 4/27, 5/20, 5/46, 5/63
- Aluminum series
  - 1LE10, 1PC10 ... 2/70
  - 1MB10 ... 4/27
  - 1PC1300, 1PC1303 ... 5/20
- Cast-iron series
  - 1LE15, 1LE16 ... 2/71
  - 1MB15 Basic Line, 1MB16 Performance Line ... 4/28
  - 1PC1301, 1PC1304 ... 5/20
  - 1PC1433, 1PC1443, 1PC1463 ... 5/63

Motors according to NEMA Standard ... 6/2
Motors for converter operation ... 5/58
Motors for Zone 21/22 or 2 in type of protection Ex t or Ex n ... 4/9
Motors with High Efficiency IE2 ... 2/8, 4/11, 5/8
- Aluminum series
  - 1MB10 self-ventilated ... 4/11
  - 1LE1001 self-ventilated or forced-air cooled ... 2/8
  - 1LE1001 self-ventilated with increased output ... 2/11
  - 1LE1041 self-ventilated or forced-air cooled ... 2/13
  - 1LE1041 self-ventilated with increased output ... 2/14
  - 1PC1300 self-ventilated or forced-air cooled ... 5/8
- Cast-iron series
  - 1LE1501/1LE1601 self-ventilated or forced-air cooled ... 2/15
  - 1LE1501/1LE1601 self-ventilated with increased output ... 2/19
  - 1LE1541 self-ventilated or forced-air cooled ... 2/21
  - 1LE1541 self-ventilated or forced-air cooled with increased output ... 2/23
  - 1MB15, 1MB16 self-ventilated ... 4/13
  - 1PC1301 self-ventilated or forced-air cooled ... 5/10

Motors with IE3 Premium Efficiency for line operation ... 5/57
- Cast-iron series
  - 1PC1433 self ventilated ... 5/57

Motors with Premium Efficiency IE3 ... 2/24, 4/17, 5/13
- Aluminum series
  - 1MB10 self-ventilated ... 4/17
  - 1LE1003 self-ventilated ... 2/24
  - 1LE1003 self-ventilated with increased output ... 2/27
  - 1LE1043 self-ventilated or forced-air cooled ... 2/28
  - 1LE1043 self-ventilated or forced-air cooled with increased output ... 2/29
  - 1PC1303 self-ventilated or forced-air cooled ... 5/13
- Cast-iron series
  - 1LE1503/1LE1603 self-ventilated or forced-air cooled ... 2/30
  - 1LE1503/1LE1603 self-ventilated with increased output ... 2/33
  - 1LE1543/1LE1643 self-ventilated or forced-air cooled ... 2/34
  - 1LE1543/1LE1643 self-ventilated or forced-air cooled ... 2/36
  - 1MB15, 1MB16 self-ventilated ... 4/18
  - 1PC1304 self-ventilated or forced-air cooled ... 5/14

© Siemens AG 2015

Motors with Standard Efficiency IE1 ..... 2/40, 4/9
- Aluminum series
  - 1LE1002 self-ventilated or forced-air cooled 2/40
  - 1LE1002 self-ventilated with increased output 2/41
  - 1MB10 self-ventilated 4/9

Motors with Super Premium Efficiency IE4 ..... 2/37
- Aluminum series
  - 1LE1004 self-ventilated or forced-air cooled 2/37
- Cast-iron series
  - 1LE1504/1LE1604 self-ventilated or forced-air cooled 2/38

Moutings (encoder, separately driven fan, brake) 5/44

N

NEMA Energy Efficient motors 2/42
- Aluminum series
  - 1LE1021 self-ventilated or forced-air cooled 2/42
- Cast-iron series
  - 1LE1521/1LE1621 self-ventilated or forced-air cooled 2/45

NEMA motors 6/2

NEMA Premium Efficient motors 2/49
- Aluminum series
  - 1LE1023 self-ventilated or forced-air cooled 2/49
- Cast-iron series
  - 1LE1523/1LE1623 self-ventilated or forced-air cooled 2/51

Noise levels 1/45

Non-essential Service 5/42

Notes on the dimensions 2/91, 4/41, 5/29, 5/69

Number of poles 5/3

O

Online Services 6/11

Online Support 6/6

Optimization Services 6/9

Options 2/7, 4/8, 5/7, 5/47

Options 2/74, 4/31, 5/22, 5/48, 5/65
- Aluminum series
  - 1LE10 ..... 2/74, 5/48
  - 1MB10 ..... 4/31, 5/50
  - 1PC10 ..... 2/74
  - 1PC1300, 1PC1303 ..... 5/22
- Cast-iron series
  - 1LE15 Basic Line, 1LE16 Performance Line 2/80, 5/49
  - 1MB15 Basic Line, 1MB16 Performance Line 4/34, 5/50
  - 1PC1301, 1PC1304 ..... 5/24
  - 1PC1433, 1PC1443, 1PC1463 ..... 5/65

Ordering example 5/47

Orientation 2/2, 4/2, 5/2, 5/42, 5/51

Outputs 1/25

Overall dimensions 2/89, 4/40, 5/28, 5/68

Overview of SIMOTICS XP 1MA/1MB1/1MJ/1LA/1LG/1PQ8 explosion-proof motors 4/4

Overview of SIMOTICS XP 1MA/1MB1/1MJ/1LA/1LG/1PQ8 explosion-proof motors 4/4

Overview of technical specifications 2/5, 5/54

P

Packaging 1/17

Paint finish 1/14, 5/46, 5/53

Partners at Industry 6/10

Plant Maintenance 6/9

POG10 rotary pulse encoder 1/85

POG9 rotary pulse encoder 1/85

Pole-changing motors 2/54
- Aluminum series 2/54
  - 1LE1011 self-ventilated, constant load torque 2/54
  - 1LE1011/1LE1012 self-ventilated, square-law load torque 2/55

Power factor 1/27

Product Selection Using Interactive Catalog CA01 of Industry 6/11

R

Rated output 5/3

Rated speed 1/27

Rated torque 1/27

Rating plate 1/26, 5/46, 5/55

Raw material/metal surcharges for dysprosium and neodym (rare earths), explanation 6/34

Raw material/metal surcharges, explanation 6/33

Repair Services 6/7

Rotor 1/47

S

Safety notes 1/17

Separately driven fan 1/73

Service Contracts 6/9

Shaft extension 1/47, 5/5

Shaft 1/47

Siemens Industry Automation and Drive Technologies in the WWW 6/11

SIMOTICS DP Application-Specific Motors 5/1

SIMOTICS EE-COMPARATOR 6/16

SIMOTICS XP 1MB1 Explosion-Proof Motors 4/1

SinaSave energy efficiency tool 6/15

SinaSave 6/15

SIPLUS CMS condition monitoring systems for the continuous condition monitoring of motors 6/18

SIPLUS CMS 6/18

SIZER for Siemens Drives configuration tool 6/17

SIZER for Siemens Drives 6/17

SIZER WEB ENGINEERING 6/13

Smoke-extraction motors 5/2

Spare Parts 6/7

Special technology 1/83
- HOG10 D 1024 I rotary pulse encoder 1/86
- HOG9 D 1024 I rotary pulse encoder 1/84
- LL 861 900 220 rotary pulse encoder 1/83
- POG10 rotary pulse encoder 1/85
- POG9 rotary pulse encoder 1/85
- Dimensions and weights 1/87

Special versions 1/8, 2/74, 4/31, 5/22, 5/48, 5/65
- Options 4/31, 5/22, 5/48, 5/65
  - Aluminum series 1LE10 ..... 5/48
  - Aluminum series 1MB10 ..... 4/31
  - Aluminum series 1LE10, 1PC10 ..... 2/74
  - Aluminum series 1MB10 ..... 5/50
  - Aluminum series 1PC1300, 1PC1303 ..... 5/22
  - Cast iron series 1PC1433, 1PC1443, 1PC1463 ..... 5/65
  - Cast-iron series 1LE15 Basic Line, 1LE16 Performance Line 5/49
  - Cast-iron series 1LE15, 1LE16 ..... 2/80
  - Cast-iron series 1MB15 Basic Line, 1MB16 Performance Line 4/34
  - Cast-iron series 1MB15/1MB16 ..... 5/50
  - Cast-iron series 1PC1301, 1PC1304 ..... 5/24

Specifications 1/18

Standard Motors SIMOTICS GP/SD 1LE1/1PC1 ..... 2/1

Standards and regulations 5/3

Standards 1/18

Steel plant motors 1PC14 ..... 5/51

© Siemens AG 2015

Subject index

Supplements to article numbers 2/57, 4/21, 5/16, 5/61
- Terminal box position 4/29, 5/21, 5/64
  - Aluminum series 1MB10 ..... 4/29
  - Aluminum series 1LE10, 1PC10 ..... 2/72
  - Aluminum series 1PC1300, 1PC1303 ..... 5/21
  - Cast-iron series 1LE15 , 1LE16 ..... 2/73
  - Cast-iron series 1MB15 Basic Line, 1MB16 Performance Line 4/30
  - Cast-iron series 1PC1301, 1PC1304 ..... 5/21
  - Cast iron series 1PC1433, 1PC1443, 1PC1463 ..... 5/64
- Types of construction 4/23, 5/17, 5/62
  - Aluminum series 1MB10 ..... 4/23
  - Aluminum series 1LE10, 1PC10 ..... 2/62
  - Aluminum series 1PC1300, 1PC1303 ..... 5/17
  - Cast-iron series 1LE15, 1LE16 ..... 2/66
  - Cast-iron series 1MB15 Basic Line, 1MB16 Performance Line 4/25
  - Cast-iron series 1PC1301, 1PC1304 ..... 5/19
  - Cast iron series 1PC1433, 1PC1443, 1PC1463 ..... 5/62
- Motor protection 4/27, 5/20, 5/63
  - Aluminum series 1MB10 ..... 4/27
  - Aluminum series 1LE10, 1PC10 ..... 2/70
  - Aluminum series 1PC1300, 1PC1303 ..... 5/20
  - Cast-iron series 1LE15, 1LE16 ..... 2/71
  - Cast-iron series 1MB15 Basic Line, 1MB16 Performance Line 4/28
  - Cast-iron series 1PC1301, 1PC1304 ..... 5/20
  - Cast iron series 1PC1433, 1PC1443, 1PC1463 ..... 5/63
- Voltages 4/21, 5/16, 5/61
  - Aluminum series 1MB10 ..... 4/21
  - Aluminum series 1LE10, 1PC10 ..... 2/57
  - Aluminum series 1LE1011, 1PC1012 ..... 2/59
  - Aluminum series 1PC1300, 1PC1303 ..... 5/16
  - Cast-iron series 1LE15, 1LE16 ..... 2/60
  - Cast-iron series 1MB15 Basic Line, 1MB16 Performance Line 4/22
  - Cast-iron series 1PC1301, 1PC1304 ..... 5/16
  - Cast iron series 1PC1433, 1PC1443, 1PC1463 ..... 5/61

T

Technical Consulting 6/8
Technical specifications 1/13
Technical Support 6/6
Technology - Dimensions and weights 1/87
Temperature class 5/46
Temperature/time classes 5/2
Terminal box position 2/72, 4/29, 5/21, 5/64
- Aluminum series 1MB10 ..... 4/29
- Aluminum series 1LE10, 1PC10 ..... 2/72
- Aluminum series 1PC1300, 1PC1303 ..... 5/21
- Cast-iron series 1LE15 , 1LE16 ..... 2/73
- Cast-iron series 1MB15 Basic Line, 1MB16 Performance Line 4/30
- Cast-iron series 1PC1301, 1PC1304 ..... 5/21
- Cast iron series 1PC1433, 1PC1443, 1PC1463 ..... 5/64

Test certificates 1/17
Tolerances for electrical data 1/18
Tools and engineering 6/13
Torque/frequency characteristics 5/56
Totally Integrated Automation 4
Totally Integrated Power 6
Train-compatible version 1/21
Training 6/8
Transport 1/44
Type of protection Ex nA for use in Zone 2 ..... 4/6
Type of protection Ex nA/Ex tc for use in Zone 2/22 ..... 4/6
Type of protection Ex tb IIIC and Ex tc IIIB for use in Zones 21 and 22 ..... 4/6
Type test 5/43
Types of construction 1/32, 2/62, 4/23, 5/17, 5/62
- Aluminum series 1MB10 ..... 4/23
- Aluminum series 1LE10, 1PC10 ..... 2/62
- Aluminum series 1PC1300, 1PC1303 ..... 5/17
- Cast-iron series 1LE15, 1LE16 ..... 2/66
- Cast-iron series 1MB15 Basic Line, 1MB16 Performance Line 4/25
- Cast-iron series 1PC1301, 1PC1304 ..... 5/19
- Cast iron series 1PC1433, 1PC1443, 1PC1463 ..... 5/62

Types of protection 4/3

V

Values of the metal factor 6/35
Ventilation 1/30
Vibration quantity 1/46
VIK version 1/21, 4/7
Voltage 5/3
Voltages 1/25, 2/57, 4/21, 5/16, 5/61
- Aluminum series
  - 1LE10, 1PC10 ..... 2/57
  - 1LE1011, 1PC1012 ..... 2/59
  - 1MB10 ..... 4/21
  - 1PC1300, 1PC1303 ..... 5/16
- Cast-iron series
  - 1LE15, 1LE16 ..... 2/60
  - 1MB15 Basic Line, 1MB16 Performance Line 4/22
  - 1PC1301, 1PC1304 ..... 5/16
  - 1PC1433, 1PC1443, 1PC1463 ..... 5/61

W

Winding protection 5/46
Winding temperature monitoring 5/53
Winding 1/28

Y

Your machines and plant can do more - with Industry Services. 6/5

Z

Zone 1 with type of protection Ex e II increased safety "e" 4/6
Zone 1 with type of protection Ex de IIC explosion-proof enclosure "d" 4/6

© Siemens AG 2015

1LE10

1LE1001 ..... 2/8, 2/9, 2/10, 2/11, 2/12
1LE1002 ..... 2/40, 2/41
1LE1003 ..... 2/24, 2/25, 2/26, 2/27
1LE1004 ..... 2/37,
1LE1011 ..... 2/54, 2/55, 2/56
1LE1012 ..... 2/55
1LE1021 ..... 2/42, 2/43, 2/44
1LE1023 ..... 2/49, 2/50
1LE1041 ..... 2/13, 2/14
1LE1043 ..... 2/28, 2/29

1LE15

1LE1501 ..... 2/15, 2/16, 2/17, 2/18, 2/19, 2/20
1LE1503 ..... 2/30, 2/31, 2/32, 2/33
1LE1504 ..... 2/38, 2/39
1LE1521 ..... 2/45, 2/46, 2/47, 2/48
1LE1523 ..... 2/51, 2/52, 2/53
1LE1541 ..... 2/21, 2/22, 2/23
1LE1543 ..... 2/34, 2/35, 2/36

1LE16

1LE1601 ..... 2/15, 2/16, 2/17, 2/18, 2/19, 2/20
1LE1603 ..... 2/30, 2/31, 2/32, 2/33
1LE1604 ..... 2/38, 2/39
1LE1621 ..... 2/45, 2/46, 2/47, 2/48
1LE1623 ..... 2/51, 2/52, 2/53
1LE1643 ..... 2/34, 2/35, 2/36

1MB10

1MB1011 ..... 4/11, 4/12
1MB1012 ..... 4/9, 4/10
1MB1013 ..... 4/17
1MB1021 ..... 4/11, 4/12
1MB1022 ..... 4/9, 4/10
1MB1023 ..... 4/17
1MB1031 ..... 4/11, 4/12
1MB1032 ..... 4/9, 4/10
1MB1033 ..... 4/17

1MB15

1MB1511 ..... 4/13, 4/14, 4/15, 4/16
1MB1513 ..... 4/18, 4/19, 4/20
1MB1521 ..... 4/13, 4/14, 4/15, 4/16
1MB1523 ..... 4/18, 4/19, 4/20
1MB1531 ..... 4/13, 4/14, 4/15, 4/16
1MB1533 ..... 4/18, 4/19, 4/20

1MB16

1MB1611 ..... 4/13, 4/14, 4/15, 4/16
1MB1613 ..... 4/18, 4/19, 4/20
1MB1621 ..... 4/13, 4/14, 4/15, 4/16
1MB1623 ..... 4/18, 4/19, 4/20
1MB1631 ..... 4/13, 4/14, 4/15, 4/16
1MB1633 ..... 4/18, 4/19, 4/20

1PC13

1PC1300 ..... 5/8, 5/9
1PC1301 ..... 5/10, 5/11, 5/12
1PC1303 ..... 5/13
1PC1304 ..... 5/14, 5/15

1PC14

1PC1433 ..... 5/57
1PC1443 ..... 5/58
1PC1463 ..... 5/60

6SL3

6SL3070-0AA00-0AG0 ..... 6/17

E86060

E86060-D4001-A510-D6-7600 ..... 6/14

© Siemens AG 2015

Index of order codes

Order codes for 1LE, 1MB1, 1PC motors

All options are listed alphanumerically according to order codes in the following table.

A list of all the options available arranged according to category can be found in Catalog Section 1 "Introduction", "Guide to selecting and ordering the motors".

Order code	Special versions	Category	For further information, see Page
B01	Printed German/English Operating Instructions (Compact) enclosed in each wire-lattice pallet	Packaging, safety notes, documentation and test certificates	2/78
B02	Acceptance test certificate 3.1 in accordance with EN 10204		2/78, 2/86, 4/33, 4/36, 5/23, 5/25, 5/66
B04	Printed German/English Operating Instructions enclosed		2/78, 2/86, 4/33, 4/36, 5/23, 5/25, 5/66
B07	Extra rating plate for voltage tolerance	Rating plate and extra rating plates	2/78, 2/86, 5/23, 5/25
B10	Individual acceptance by marine classification society	Marine version – Acceptance/certification	
B30	Design (IP55) for Zone 2 in Ex nA II C and 22 in Ex tc IIIB, for non-conductive dust	Design for Zones according to ATEX	4/31, 4/34
B31	Design for Zone 2 in Ex nA IIB T3 Gc		4/31, 4/34
B60	Document - Electrical data sheet	Packaging, safety notes, documentation and test certificates	2/78, 2/86
B61	Document - Order dimensional drawing		2/78, 2/86
B65	Standard test (routine test) with acceptance		2/86, 5/23, 5/25
B82	Type test with heat run for horizontal motors, without acceptance		2/86
B83	Type test with heat run for horizontal motors, with acceptance		2/78, 2/86, 4/33, 4/36, 5/23, 5/25
B99	Wire-lattice pallet packaging		2/78, 4/33, 4/36
C02	VIK design marked with Ex nA II on rating plate	Design for Zones according to ATEX	4/31, 4/34
C02	VIK version	Designs in accordance with standards and specifications	2/77, 2/84
D02	Coolant temperature –50 to +40 °C	Coolant temperature and installation altitude	2/84
D03	Coolant temperature -40 to +40 °C		2/77, 2/84, 4/32, 4/35
D04	Coolant temperature –30 to +40 °C		2/77, 2/84, 5/22, 5/24
D22	Motor without CE marking for export outside EEA (see EU Directive 640/2009)	Designs in accordance with standards and specifications	2/77, 2/84
D30	Electrical according to NEMA MG1-12		2/77, 2/84
D31	Design according to UL with "Recognition Mark"		2/77, 2/84
D33	KEMCO Korea Energy Efficiency Label		2/77, 2/84
D34	China Energy Efficiency Label		2/77, 2/84
D35	Ex certificate EAC for the Eurasian customs union		4/32, 4/35
D37	IEC Ex certification		4/32, 4/35
D40	Canadian regulations (CSA)		2/77, 2/84
D47	TR CU product safety certificate EAC for Eurasian customs union		2/77, 2/84
E11	With type test certificate according to Germanischer Lloyd (GL), CT45°C, temperature class 155 (F) utilized according to 155 (F)	Marine version – Basic version	
E21	With type test certificate according to Lloyds Register (LR), CT45 °C, temperature class 155 (F) utilized according to 155 (F)		
E31	With type test certificate according to Bureau Veritas (BV), CT45 °C, temperature class 155 (F) utilized according to 155 (F)		
E41	With type test certificate according to Registro Italiano Navale (RINA), CT45 °C, temperature class 155 (F) utilized according to 155 (F)		
E46	With type test certificate according to Russian Maritime Register (RS), CT45 °C, temperature class 155 (F) utilized according to 155 (F)		
E51	With type test certificate according to Det Norske Veritas (DNV), CT45 °C, temperature class 155 (F) utilized according to 155 (F)		
E52	With type test certificate according to American Bureau of Shipping (ABS), CT50 °C, temperature class 155 (F) utilized according to 155 (F)		
E54	With type test certificate according to Korean Register of Shipping (KR), CT45 °C, temperature class 155 (F) utilized according to 155 (F)		
F01	Mounting of holding brake (standard assignment)	Modular technology – Basic versions	2/76, 2/83
F02	Mounting of brake for higher switching frequency (operating brake)		2/76

© Siemens AG 2015

Order code	Special versions	Category	For further information, see Page
F10	Brake supply voltage 24 V DC	Modular technology – Additional versions	2/76, 2/83
F11	Brake supply voltage 230 V AC, 50/60 Hz		2/76, 2/83
F12	Brake supply voltage 400 V AC, 50/60 Hz		2/76, 2/83
F50	Mechanical manual brake release with lever (no locking)	Modular technology – Additional versions	2/76, 2/83
F70	Mounting of separately driven fan	Modular technology - Basic versions	2/76, 2/83, 5/65
F74	Sheet metal fan cover	Heating and ventilation	2/78, 2/86, 4/32, 4/36
F75	Fan cover for textile industry		2/78
F76	Metal external fan		2/78, 2/86, 4/32, 4/36, 5/66
F77	Low-noise version for 2-pole motors with clockwise direction of rotation	Mechanical design and degrees of protection	2/76, 2/84, 4/32, 4/35
F78	Low-noise version for 2-pole motors with counter-clockwise direction of rotation		2/76, 2/84, 4/32, 4/35
F90	Without external fan and without fan cover	Heating and ventilation	2/78, 2/86, 5/23, 5/25
G01	Mounting of 1XP8012-10 (HTL) rotary pulse encoder	Modular technology - Basic versions	2/76, 2/83
G02	Mounting of 1XP8012-20 (TTL) rotary pulse encoder		2/76, 2/83
G04	Mounting of LL 861 900 220 rotary pulse encoder	Special technology	2/76, 2/83, 5/65
G05	Mounting of HOG 9 D 1024 I rotary pulse encoder		2/76, 2/83, 5/65
G06	Mounting of HOG 10 D 1024 I rotary pulse encoder		2/76, 2/83, 5/65
G07	Mounting of POG10D rotary pulse encoder (only in combination with separately driven fan or brake)		2/83
G08	Mounting of POG9 rotary pulse encoder (only in combination with separately driven fan or brake)		2/83
G15	Mounting of rotary pulse encoder HOG 10 DN 1024 I, terminal box moisture protection		2/83
G16	Mounting of rotary pulse encoder HOG 10 DN 1024 I, terminal box dust protection		2/83
G40	Prepared for mountings, center hole only	Mechanical design and degrees of protection	2/76, 2/84
G41	Prepared for mountings with D12 shaft		2/76, 2/84
G42	Prepared for mountings with D16 shaft		2/76, 2/84, 5/65
G43	Protective cover for encoder (supplied loose – only for mountings with order codes **G40**, **G41** and **G42**)		2/76, 2/84
H00	Protective cover		2/76, 2/84, 4/32, 4/35, 5/22, 5/65
H01	Screwed-on (instead of cast) feet		2/76, 2/84, 5/22, 5/24
H02	Vibration-proof version; vibration resistance to Class 3M4 according to IEC 60721-3-3		2/76, 2/84, 4/32, 4/35
H03	Condensation drainage holes		2/76, 2/84, 4/32, 5/65
H04	External grounding	Motor connection and terminal box	2/74, 2/80, 5/22
H07	Rust-resistant screws (externally)	Mechanical design and degrees of protection	2/76, 2/84, 4/32, 4/35, 5/22, 5/24, 5/65
H08	Terminal box on NDE	Motor connection and terminal box	2/74, 2/80, 5/22, 5/24, 5/65
H10	Housing with screw mounting	Mechanical design and degrees of protection	2/76,
H20	IP65 degree of protection		2/76, 2/84, 4/32, 4/35, 5/22, 5/24, 5/65
H21	IP54 degree of protection		2/84
H22	IP56 degree of protection		2/76, 2/84, 4/32, 4/35, 5/22, 5/24
H23	Drive-end seal for flange-mounting motors, oil-tight to 0.1 bar		2/76, 2/84, 4/32, 4/35
H70	Second external grounding	Motor connection and terminal box	2/80, 5/65

© Siemens AG 2015

Index of order codes

Order code	Special versions	Category	For further information, see Page
L00	Vibration quantity level B	Balance and vibration quantity	2/77, 2/85, 4/32, 4/36, 5/22, 5/24, 5/66
L01	Balancing without feather key, feather key is supplied		2/77, 2/85, 4/32, 4/36, 5/22, 5/24, 5/66
L02	Full-key balancing		2/77, 2/85, 4/32, 4/36, 5/22, 5/24, 5/66
L04	Shaft extension with standard dimensions, without feather keyway	Shaft and rotor	2/77, 2/85, 4/32, 4/36, 5/23, 5/25, 5/66
L05	Standard cylindrical shaft extension		2/77, 2/85, 4/32, 4/36, 5/23, 5/25
L06	Standard shaft made of stainless steel (e.g. 1.4021)		2/77, 2/85, 4/32, 4/36, 5/66
L07	Concentricity of shaft extension in accordance with DIN 42955 Tolerance R		2/77, 2/85, 4/32, 4/36, 5/23, 5/25, 5/66
L08	Concentricity of shaft extension, coaxiality and linear movement in accordance with DIN 42955 Tolerance R for flange-mounting motors		2/77, 2/85, 4/32, 4/36, 5/23, 5/25, 5/66
L19	Regreasing device with M10X1 grease nipple according to DIN 71412-A	Bearings and lubrication	2/77, 2/85, 4/35, 5/24
L20	Located bearing DE		2/77, 2/85, 4/32, 4/35
L21	Located bearing NDE		2/77, 2/85, 4/32, 4/35
L22	Bearing design for increased cantilever forces		2/77, 2/85, 4/32, 4/35, 5/22, 5/24
L23	Regreasing device		2/77, 2/85, 4/32, 4/35, 5/22, 5/24, 5/65
L25	Deep-groove bearings reinforced at both ends for DE and NDE, bearing size 63		2/77, 2/85, 4/32, 4/35
L28	Reinforced bearings at both DE and NDE, DE bearing for increased cantilever forces		2/85
L50	Bearing insulation DE		2/85
L51	Bearing insulation NDE		2/85, 5/65
L52	Grounding brush for converter operation	Mechanical design and degrees of protection	2/84
L82	Train-compatible version	Designs in accordance with standards and specifications	2/77
M01	Connected in star for dispatch	Packaging, safety notes, documentation and test certificates	2/78, 2/86, 4/33, 4/36
M02	Connected in delta for dispatch		2/78, 2/86, 4/33, 4/36
M10	Extra rating plate(s), supplied loose	Rating plate and extra rating plates	2/78, 2/86, 4/33, 4/36, 5/23, 5/25, 5/66
M11	Plate(s) made of stainless steel		2/78, 2/86, 4/33, 4/36

© Siemens AG 2015

Order code	Special versions	Category	For further information, see Page
N01	Temperature class 155 (F), utilized acc. to 155 (F), with service factor (SF)	Windings and insulation	2/74, 2/81
N02	Temperature class 155 (F), utilized acc. to 155 (F), with increased output		2/74, 2/81
N03	Temperature class 155 (F), utilized acc. to 155 (F), with increased coolant temperature		2/74, 2/81
N05	Temperature class 155 (F), utilized acc. to 130 (B), coolant temperature 45 °C, derating approx. 4 %		2/74, 2/81, 4/31, 4/34
N06	Temperature class 155 (F), utilized acc. to 130 (B), coolant temperature 50 °C, derating approx. 8 %		2/74, 2/81, 4/31, 4/34
N07	Temperature class 155 (F), utilized acc. to 130 (B), coolant temperature 55 °C, derating approx. 13 %		2/74, 2/81, 4/31, 4/34
N08	Temperature class 155 (F), utilized acc. to 130 (B), coolant temperature 60 °C, derating approx. 18 %		2/75, 2/82, 4/31, 4/34
N10	Temperature class H		2/75, 2/82
N11	Temperature class 180 (H) at rated output and max. CT 60 °C		2/75, 2/82, 5/65
N20	Increased air humidity/temperature with 30 to 60 g water per m^3 of air		2/75, 2/82, 4/31, 4/34, 5/22, 5/24
N21	Increased air humidity/temperature with 60 to 100 g water per m^3 of air		2/75, 2/82, 4/31, 4/34
P01	Next larger standard flange	Mechanical design and degrees of protection	5/22
P02	Next smaller standard flange		
Q01	Measuring nipple for SPM shock pulse measurement for bearing inspection	Motor protection (bearing protection)	5/22, 5/24
Q01	Measuring nipple for SPM shock pulse measurement for bearing inspection	Bearings and lubrication	2/77, 2/85, 4/32, 4/35
Q02	Anti-condensation heating for 230 V	Heating and ventilation	2/78, 2/86, 4/32, 4/36, 5/66
Q03	Anti-condensation heating for 115 V		2/78, 2/86, 4/32, 4/36, 5/66
Q05	Prepared for mounting a SIPLUS CMS 1000 vibration sensor	Motor protection (bearing protection)	2/80, 5/22, 5/24, 5/65
Q11	Motor protection with PTC thermistor with 3 embedded temperature sensors for tripping		2/80
Q12	Motor protection with PTC thermistor with 6 embedded temperature sensors for tripping and alarm		2/80
Q23	Motor temperature detection with embedded temperature sensor KTY 84-130		2/80
Q25	Motor temperature detection with 2 × embedded temperature sensors KTY 84-130		2/80
Q31	Temperature detectors for tripping		2/80
Q32	2 × 3 temperature detectors for alarm and tripping		2/80
Q60	Installation of 3 Pt100 resistance thermometers in stator winding (2-wire circuit)		2/80
Q61	Installation of 6 Pt100 resistance thermometers in stator winding (2-wire circuit)		2/80
Q62	Installation of 1 Pt100 resistance thermometer in stator winding, 2-wire circuit		2/80
Q63	Installation of 3 Pt100 resistance thermometers in stator winding, 3-wire circuit		2/80
Q64	Installation of 6 Pt100 resistance thermometers in stator winding, 3-wire circuit		2/80
Q72	Installation of 2 Pt100 screw-in resistance thermometers in basic circuit for monitoring bearing temperature with rolling-contact bearings		2/80, 4/34
Q78	Installation of 2 Pt100 screw-in resistance thermometers in 3-wire circuit for monitoring bearing temperature with rolling-contact bearings		2/80, 4/34
Q79	Installation of 2 Pt100 double screw-in resistance thermometers in 3-wire circuit for monitoring bearing temperature with rolling-contact bearings		2/80, 4/34
Q80	Extension of the liability for defects period by 12 months to a total of 24 months (2 years) from delivery	Extension of the liability for defects	2/86
Q82	Extension of the liability for defects period by 24 months to a total of 36 months (3 years) from delivery		2/86

© Siemens AG 2015

Index of order codes

Order code	Special versions	Category	For further information, see Page
R10	Rotation of the terminal box through 90°, entry from DE	Motor connection and terminal box	2/74, 2/80, 4/31, 4/34, 5/65
R11	Rotation of the terminal box through 90°, entry from NDE		2/74, 2/80, 4/31, 4/34, 5/65
R12	Rotation of the terminal box through 180°		2/74, 2/81, 4/31, 4/34, 5/22, 5/24, 5/65
R13	Terminal box in position 0°; connection from right		5/22, 5/24
R14	One EMC cable gland		2/81
R15	One metal cable gland		2/74, 2/81, 5/65
R16	EMC cable gland, maximum configuration		2/81, 5/65
R17	Stud terminal for cable connection, accessories pack (3 items)		2/81, 4/34
R18	Cable gland, maximum configuration		2/74, 2/81, 4/31, 4/34, 5/65
R19	Saddle terminal for connection without cable lug, accessories pack		2/81, 4/34
R20	3 cables protruding, 0.5 m long		2/74, 2/81
R21	3 cables protruding, 1.5 m long		2/74, 2/81
R22	6 cables protruding, 0.5 m long		2/74, 2/81
R23	6 cables protruding, 1.5 m long		2/74, 2/81
R24	6 cables protruding, 3 m long		2/74, 2/81
R30	Reduction piece for M cable gland in accordance with British Standard, both cable entries mounted		2/74, 2/81
R50	Larger terminal box		2/74, 2/81, 4/31, 4/34, 5/65
R51	Terminal box without cable entry opening		2/81, 5/65
R52	Drilled removable entry plate		2/81
R53	Undrilled removable entry plate		2/81
R60	Auxiliary terminal box, aluminum		2/74
R62	Cast-iron auxiliary terminal box (small)		2/81, 4/34
R70	Motor connector Han-Drive 10e for 230 VΔ/400 VY		2/74
R71	Motor connector EMC Han-Drive 10e for 230 VΔ/400 VY		2/74
R72	Small motor connector CQ12 with EMC		2/74
R73	Small motor connector CQ12 without EMC		2/74
R74	Silicon-free version		2/81, 5/65
R76	6-piece terminal board		2/74
S00	Unpainted (only cast-iron parts primed)	Colors and paint finish	2/75, 2/82, 4/31, 4/35, 5/22, 5/24
S01	Unpainted, only primed		2/75, 2/82, 4/31, 4/35, 5/22, 5/24
S02	Special finish		2/75, 2/82, 4/35, 5/24, 5/65
S03	Special finish sea air resistant		2/75, 2/82, 4/31, 4/35, 5/22, 5/24
S04	Special paint for use offshore		2/82, 4/35
S05	Internal coating		2/82, 5/24
S06	Top coat polyurethane		2/75, 2/82, 4/31, 4/35, 5/22, 5/24
Y50	Temperature class 155 (F), utilized acc. to 130 (B), with higher coolant temperature and/or installation altitude	Windings and insulation	2/75, 2/82, 4/31, 4/34,
Y52	Temperature class 155 (F), utilized according to 155 (F), other requirements	Windings and insulation	2/75, 2/82
Y53	Finish in other standard RAL colors: RAL 1002, 1013, 1015, 1019, 2003, 2004, 3000, 3007, 5007, 5009, 5010, 5012, 5015, 5017, 5018, 5019, 6011, 6019, 6021, 7000, 7001, 7004, 7011, 7016, 7022, 7031, 7032, 7033, 7035, 9001, 9002, 9005 (see Catalog Section 1 "Introduction")	Colors and paint finish	2/75, 2/82, 4/31, 4/35, 5/22, 5/24, 5/65
Y56	Finish in special RAL colors: For RAL colors, see "Special finish in special RAL colors" (see Catalog Section 1 "Introduction")		2/75, 2/82, 4/31, 4/35, 5/22, 5/24, 5/65
Y58	Non-standard shaft extension, DE	Shaft and rotor	2/77, 2/85, 4/32, 4/36, 5/23, 5/25, 5/66
Y59	Non-standard shaft extension, NDE		2/77, 2/85, 4/32, 4/36, 5/23, 5/25
Y60	Special shaft steel as requested by customer		2/85, 5/66

© Siemens AG 2015

Order code	Special versions	Category	For further information, see Page
Y61	Non-standard threaded through hole (NPT or G thread)	Motor connection and terminal box	2/81
Y74	Mounting of rotary pulse encoder HOG 10 DN 1024 I + FSL, (integrated centrifugal switch, speed ... rpm), terminal box moisture protection	Special technology	2/83
Y75	Temperature class 180 (H), utilized according to 155 (F)	Windings and insulation	2/75, 2/82
Y76	Mounting of rotary pulse encoder HOG 10 DN 1024 I + FSL, (integrated centrifugal switch, speed .... rpm), terminal box dust protection	Special technology	2/83
Y79	Mounting of rotary pulse encoder HOG 10 DN 1024 I + ESL 93, (integrated electronic speed switch, speed .... rpm), terminal box dust protection		2/83
Y80	Extra rating plate or rating plate with deviating rating plate data	Rating plate and extra rating plates	2/78, 2/86, 4/33, 4/36, 5/23, 5/25, 5/66
Y81	Separately driven fan with non-standard voltage and/or frequency	Heating and ventilation	2/86
Y82	Extra rating plate with customer specifications	Rating plate and extra rating plates	2/78, 2/86, 4/33, 4/36, 5/23, 5/25, 5/66
Y84	Additional information on rating plate and on package label (max. 20 characters)		2/78, 2/86, 4/33, 4/36, 5/23, 5/25
Y85	Adhesive label, supplied loose		2/78, 2/86
Y98	Printed Operating Instructions (Compact) for explosion-proof motors enclosed in other official EU languages	Packaging, safety notes, documentation and test certificates	4/33, 4/36

© Siemens AG 2015

Notes

© Siemens AG 2015

© Siemens AG 2015

Notes

© Siemens AG 2015

Explanation of the raw material/metal surcharges[1)]

Surcharge calculation

To compensate for variations in the price of the raw materials silver, copper, aluminum, lead, gold, dysprosium[2)] and/or neodym[2)], surcharges are calculated on a daily basis using the so-called metal factor for products containing these raw materials. A surcharge for the respective raw material is calculated as a supplement to the price of a product if the basic official price of the raw material in question is exceeded.

The surcharges are calculated in accordance with the following criteria:

- Basic official price of the raw material
  Basic official price from the day prior to receipt of the order or prior to release order (daily price) for[3)]
  - Silver (sales price, processed)
  - Gold (sales price, processed)

  and for[4)]
  - Copper (lower DEL notation + 1 %)
  - Aluminum (aluminum in cables)
  - Lead (lead in cables)
- Metal factor of the products
  Certain products are displayed with a metal factor. The metal factor determines the official price (for those raw materials concerned) as of which the metal surcharges are applied and the calculation method used (weight or percentage method). An exact explanation is given below.

Structure of the metal factor

The metal factor consists of several digits; the first digit indicates whether the percentage method of calculation refers to the list price or a possible discounted price (customer net price) (L = list price / N = customer net price).

The remaining digits indicate the method of calculation used for the respective raw material. If no surcharge is added for a raw material, a "-" is used.

1st digit	List or customer net price using the percentage method
2nd digit	for silver (AG)
3rd digit	for copper (CU)
4th digit	for aluminum (AL)
5th digit	for lead (PB)
6th digit	for gold (AU)
7th digit	for dysprosium (Dy)[2)]
8th digit	for neodym (Nd)[2)]

Weight method

The weight method uses the basic official price, the daily price and the raw material weight. In order to calculate the surcharge, the basic official price must be subtracted from the daily price. The difference is then multiplied by the raw material weight.

The basic official price can be found in the table below using the number (1 to 9) of the respective digit of the metal factor. The raw material weight can be found in the respective product descriptions.

Percentage method

Use of the percentage method is indicated by the letters A-Z at the respective digit of the metal factor.

The surcharge is increased - dependent on the deviation of the daily price compared with the basic official price - using the percentage method in "steps" and consequently offers surcharges that remain constant within the framework of this "step range". A higher percentage rate is charged for each new step. The respective percentage level can be found in the table below.

Metal factor examples

L E A – – – – –

Basis for % surcharge: List price
Silver Basis 150 €, Step 50 €, 0.5 %
Copper Basis 150 €, Step 50 €, 0.1 %
No surcharge for aluminum
No surcharge for lead
No surcharge for gold
No surcharge for dysprosium
No surcharge for neodym

N – A 6 – – – –

Basis for % surcharge: Customer net price
No surcharge for silver
Copper Basis 150 €, Step 50 €, 0.1 %
Aluminum acc. to weight, basic offic. price 225 €
No surcharge for lead
No surcharge for gold
No surcharge for dysprosium
No surcharge for neodym

– – 3 – – – – –

No basis necessary
No surcharge for silver
Copper acc. to weight, basic official price 150 €
No surcharge for aluminum
No surcharge for lead
No surcharge for gold
No surcharge for dysprosium
No surcharge for neodym

1) Refer to the separate explanation on the next page regarding the raw materials dysprosium and neodym (= rare earths).
2) For a different method of calculation, refer to the separate explanation for these raw materials on the next page.
3) Source: Umicore, Hanau (www.metalsmanagement.umicore.com).
4) Source: Schutzvereinigung DEL-Notiz e.V. (www.del-notiz.org).

© Siemens AG 2015

Explanation of the raw material/metal surcharges for dysprosium and neodym (rare earths)

Surcharge calculation

To compensate for variations in the price of the raw materials silver[1], copper[1], aluminum[1], lead[1], gold[1], dysprosium and/or neodym, surcharges are calculated on a daily basis using the so-called metal factor for products containing these raw materials. The surcharge for dysprosium and neodym is calculated as a supplement to the price of a product if the basic official price of the raw material in question is exceeded.

The surcharge is calculated in accordance with the following criteria:

- Basic official price of the raw material[2]
  Three-month basic average price (see below) in the period before the quarter in which the order was received or the release order took place (= average official price) for
  - dysprosium (Dy metal, 99 % min. FOB China; USD/kg)
  - neodym (Nd metal, 99 % min. FOB China; USD/kg)
- Metal factor of the products
  Certain products are displayed with a metal factor. The metal factor indicates (for those raw materials concerned) the basic official price as of which the surcharges for dysprosium and neodym are calculated using the weight method. An exact explanation of the metal factor is given below.

Three-month average price

The prices of rare earths vary according to the foreign currency, and there is no freely accessible stock exchange listing. This makes it more difficult for all parties involved to monitor changes in price. In order to avoid continuous adjustment of the surcharges, but to still ensure fair, transparent pricing, an average price is calculated over a three-month period using the average monthly foreign exchange rate from USD to EUR (source: European Central Bank). Since not all facts are immediately available at the start of each month, a one-month buffer is allowed before the new average price applies.

Examples of calculation of the average official price:

Period for calculation of the average price:	Period during which the order/release order is effected and the average price applies:
Sep 2012 - Nov 2012	Q1 in 2013 (Jan - Mar)
Dec 2012 - Feb 2013	Q2 in 2013 (Apr - Jun)
Mar 2013 - May 2013	Q3 in 2013 (Jul - Sep)
Jun 2013 - Aug 2013	Q4 in 2013 (Oct - Dec)

Structure of the metal factor

The metal factor consists of several digits; the first digit is not relevant to the calculation of dysprosium and neodym.

The remaining digits indicate the method of calculation used for the respective raw material. If no surcharge is added for a raw material, a "-" is used.

1st digit	List or customer net price using the percentage method
2nd digit	for silver (AG)[1]
3rd digit	for copper (CU)[1]
4th digit	for aluminum (AL)[1]
5th digit	for lead (PB)[1]
6th digit	for gold (AU)[1]
7th digit	for dysprosium (Dy)
8th digit	for neodym (Nd)

Weight method

The weight method uses the basic official price, the average price and the raw material weight. In order to calculate the surcharge, the basic official price must be subtracted from the average price. The difference is then multiplied by the raw material weight.

The basic official price can be found in the table below using the number (1 to 9) of the respective digit of the metal factor. Your Sales contact can inform you of the raw material weight.

Metal factor examples

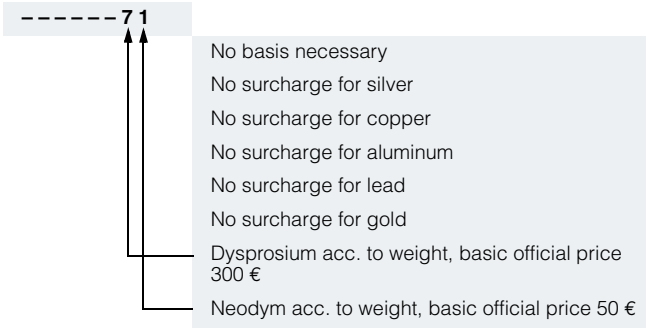

6

[1] For a different method of calculation, refer to the separate explanation for these raw materials on the previous page.
[2] Source: Asian Metal Ltd (www.asianmetal.com)

© Siemens AG 2015

Values of the metal factor

Percentage method	Basic official price in €	Step range in €	% surcharge 1st step	% surcharge 2nd step	% surcharge 3rd step	% surcharge 4th step	% surcharge per additional step
			Price in €	Price in €	Price in €	Price in €	
			150.01 - 200.00	200.01 - 250.00	250.01 - 300.00	300.01 - 350.00	
A	150	50	0.1	0.2	0.3	0.4	0.1
B	150	50	0.2	0.4	0.6	0.8	0.2
C	150	50	0.3	0.6	0.9	1.2	0.3
D	150	50	0.4	0.8	1.2	1.6	0.4
E	150	50	0.5	1.0	1.5	2.0	0.5
F	150	50	0.6	1.2	1.8	2.4	0.6
G	150	50	1.0	2.0	3.0	4.0	1.0
H	150	50	1.2	2.4	3.6	4.8	1.2
I	150	50	1.6	3.2	4.8	6.4	1.6
J	150	50	1.8	3.6	5.4	7.2	1.8
			175.01 - 225.00	225.01 - 275.00	275.01 - 325.00	325.01 - 375.00	
O	175	50	0.1	0.2	0.3	0.4	0.1
P	175	50	0.2	0.4	0.6	0.8	0.2
R	175	50	0.5	1.0	1.5	2.0	0.5
			225.01 - 275.00	275.01 - 325.00	325.01 - 375.00	375.01 - 425.00	
S	225	50	0.2	0.4	0.6	0.8	0.2
U	225	50	1.0	2.0	3.0	4.0	1.0
V	225	50	1.0	1.5	2.0	3.0	1.0
W	225	50	1.2	2.5	3.5	4.5	1.0
			150.01 - 175.00	175.01 - 200.00	200.01 - 225.00	225.01 - 250.00	
Y	150	25	0.3	0.6	0.9	1.2	0.3
			400.01 - 425.00	425.01 - 450.00	450.01 - 475.00	475.01 - 500.00	
Z	400	25	0.1	0.2	0.3	0.4	0.1
	Price basis (1st digit)						
L	Calculation based on the list price						
N	Calculation based on the customer net price (discounted list price)						
Weight method	**Basic official price in €**						
1	50	Calculation based on raw material weight					
2	100						
3	150						
4	175						
5	200						
6	225						
7	300						
8	400						
9	555						
Miscellaneous							
-	No metal surcharge						

© Siemens AG 2015

1. General Provisions

By using this catalog you can acquire hardware and software products described therein from Siemens AG subject to the following Terms and Conditions of Sale and Delivery (hereinafter referred to as "T&C"). Please note that the scope, the quality and the conditions for supplies and services, including software products, by any Siemens entity having a registered office outside Germany, shall be subject exclusively to the General Terms and Conditions of the respective Siemens entity. The following T&C apply exclusively for orders placed with Siemens Aktiengesellschaft, Germany.

1.1 For customers with a seat or registered office in Germany

For customers with a seat or registered office in Germany, the following applies subordinate to the T&C:

- the "General Terms of Payment"[1)] and,
- for software products, the "General License Conditions for Software Products for Automation and Drives for Customers with a Seat or Registered Office in Germany"[1)] and,
- for other supplies and services, the "General Conditions for the Supply of Products and Services of the Electrical and Electronics Industry"[1)].

1.2 For customers with a seat or registered office outside Germany

For customers with a seat or registered office outside Germany, the following applies subordinate to the T&C:

- the "General Terms of Payment"[1)] and,
- for software products, the "General License Conditions for Software Products for Automation and Drives for Customers with a Seat or Registered Office outside of Germany"[1)] and
- for other supplies and/or services, the "General Conditions for Supplies of Siemens Industry for Customers with a Seat or Registered Office outside of Germany"[1)].

2. Prices

The prices are in € (Euro) ex point of delivery, exclusive of packaging.

The sales tax (value added tax) is not included in the prices. It shall be charged separately at the respective rate according to the applicable statutory legal regulations.

Prices are subject to change without prior notice. We will charge the prices valid at the time of delivery.

To compensate for variations in the price of raw materials (e.g. silver, copper, aluminum, lead, gold, dysprosium and neodym), surcharges are calculated on a daily basis using the so-called metal factor for products containing these raw materials. A surcharge for the respective raw material is calculated as a supplement to the price of a product if the basic official price of the raw material in question is exceeded.

The metal factor of a product indicates the basic official price (for those raw materials concerned) as of which the surcharges on the price of the product are applied, and with what method of calculation.

You will find a detailed explanation of the metal factor on the page headed "Metal surcharges".

To calculate the surcharge (except in the cases of dysprosium and neodym), the official price from the day prior to that on which the order was received or the release order was effected is used.

To calculate the surcharge applicable to dysprosium and neodym ("rare earths"), the corresponding three-month basic average price in the quarter prior to that in which the order was received or the release order was effected is used with a one-month buffer (details on the calculation can be found in the explanation of the metal factor).

3. Additional Terms and Conditions

The dimensions are in mm. In Germany, according to the German law on units in measuring technology, data in inches apply only to devices for export.

Illustrations are not binding.

Insofar as there are no remarks on the individual pages of this catalog - especially with regard to data, dimensions and weights given - these are subject to change without prior notice.

4. Export regulations

We shall not be obligated to fulfill any agreement if such fulfillment is prevented by any impediments arising out of national or international foreign trade or customs requirements or any embargoes and/or other sanctions.

Export of goods listed in this catalog may be subject to licensing requirements. We will indicate in the delivery details whether licenses are required under German, European and US export lists. Goods labeled with "AL" not equal to "N" are subject to European or German export authorization when being exported out of the EU. Goods labeled with "ECCN" not equal to "N" are subject to US re-export authorization.

The export indications can be viewed in advance in the description of the respective goods on the Industry Mall, our online catalog system. Only the export labels "AL" and "ECCN" indicated on order confirmations, delivery notes and invoices are authoritative.

Even without a label, or with label "AL:N" or "ECCN:N", authorization may be required i.a. due to the final disposition and intended use of goods.

If you transfer goods (hardware and/or software and/or technology as well as corresponding documentation, regardless of the mode of provision) delivered by us or works and services (including all kinds of technical support) performed by us to a third party worldwide, you must comply with all applicable national and international (re-)export control regulations.

If required for the purpose of conducting export control checks, you (upon request by us) shall promptly provide us with all information pertaining to the particular end customer, final disposition and intended use of goods delivered by us respectively works and services provided by us, as well as to any export control restrictions existing in this relation.

The products listed in this catalog may be subject to European/German and/or US export regulations. Any export requiring approval is therefore subject to authorization by the relevant authorities.

Errors excepted and subject to change without prior notice.

1) The text of the Terms and Conditions of Siemens AGcan be downloaded at
www.siemens.com/automation/salesmaterial-as/catalog/en/terms_of_trade_en.pdf

© Siemens AG 2015

Catalogs

Digital Factory, Process Industries and Drives and Energy Management

Further information can be obtained from our branch offices listed at www.siemens.com/automation/partner

Interactive Catalog on DVD	*Catalog*
Products for Automation and Drives	**CA 01**

Building Control	
GAMMA Building Control	ET G1

Drive Systems	
SINAMICS G130 Drive Converter Chassis Units SINAMICS G150 Drive Converter Cabinet Units	D 11
SINAMICS GM150, SINAMICS SM150 Medium-Voltage Converters	D 12
SINAMICS PERFECT HARMONY GH180 Medium-Voltage Air-Cooled Drives Germany Edition	D 15.1
SINAMICS G180 Converters – Compact Units, Cabinet Systems, Cabinet Units Air-Cooled and Liquid-Cooled	D 18.1
SINAMICS S120 Chassis Format Units and Cabinet Modules SINAMICS S150 Converter Cabinet Units	D 21.3
SINAMICS DCM DC Converter, Control Module	D 23.1
SINAMICS DCM Cabinet	D 23.2
SINAMICS Inverters for Single-Axis Drives and SIMOTICS Motors	D 31
SINAMICS G120P and SINAMICS G120P Cabinet pump, fan, compressor converters	D 35
LOHER VARIO High Voltage Motors Flameproof, Type Series 1PS4, 1PS5, 1MV4 and 1MV5 Frame Size 355 to 1000, Power Range 80 to 7100 kW	D 83.2
Three-Phase Induction Motors SIMOTICS HV, SIMOTICS TN • Series H-compact • Series H-compact PLUS	D 84.1
High Voltage Three-phase Induction Motors SIMOTICS HV Series A-compact PLUS	D 84.9
Three-Phase Induction Motors SIMOTICS HV, Series H-compact	D 86.1
Synchronous Motors with Permanent-Magnet Technology, HT-direct	D 86.2
DC Motors	DA 12
SIMOREG DC MASTER 6RA70 Digital Chassis Converters	DA 21.1
SIMOREG K 6RA22 Analog Chassis Converters	DA 21.2
Digital: SIMOREG DC MASTER 6RM70 Digital Converter Cabinet Units	*DA 22*
SIMOVERT PM Modular Converter Systems	DA 45
SIEMOSYN Motors	DA 48
MICROMASTER 420/430/440 Inverters	DA 51.2
MICROMASTER 411/COMBIMASTER 411	DA 51.3
Low-Voltage Three-Phase-Motors	
SIMOTICS Low-Voltage Motors	D 81.1
SIMOTICS FD Low-Voltage Motors	D 81.8
LOHER Low-Voltage Motors	D 83.1
MOTOX Geared Motors	D 87.1
SIMOGEAR Geared Motors	MD 50.1
SIMOGEAR Gearboxes with adapter	MD 50.11
Mechanical Driving Machines	
FLENDER Standard Couplings	MD 10.1
FLENDER High Performance Couplings	MD 10.2
FLENDER Backlash-free Couplings	MD 10.3
FLENDER SIG Standard industrial gear units	MD 30.1
FLENDER SIP Standard industrial planetary gear units	MD 31.1

Process Instrumentation and Analytics	
Digital: Field Instruments for Process Automation	*FI 01*
Digital: SIPART Controllers and Software	*MP 31*
Products for Weighing Technology	WT 10
Digital: Process Analytical Instruments	*AP 01*
Digital: Process Analytics, Components for Continuous Emission Monitoring	*AP 11*

Low-Voltage Power Distribution and Electrical Installation Technology	*Catalog*
SENTRON · SIVACON · ALPHA Protection, Switching, Measuring and Monitoring Devices, Switchboards and Distribution Systems	LV 10
Standards-Compliant Components for Photovoltaic Plants	LV 11
Electrical Components for the Railway Industry	LV 12
Digital: TÜV-certified Power Monitoring System	*LV 14*
Components for Industrial Control Panels according to UL Standards	LV 16
3WT Air Circuit Breakers up to 4000 A	LV 35
3VT Molded Case Circuit Breakers up to 1600 A	LV 36
Digital: SIVACON System Cubicles, System Lighting and System Air-Conditioning	*LV 50*
Digital: ALPHA Distribution Systems	*LV 51*
ALPHA FIX Terminal Blocks	LV 52
SIVACON S4 Power Distribution Boards	LV 56
SIVACON 8PS Busbar Trunking Systems	LV 70
Digital: DELTA Switches and Socket Outlets	*ET D1*

Motion Control	
SINUMERIK 840D sl Type 1B Equipment for Machine Tools	NC 62
SINUMERIK 808 Equipment for Machine Tools	NC 81.1
SINUMERIK 828 Equipment for Machine Tools	NC 82
SIMOTION, SINAMICS S120 & SIMOTICS Equipment for Production Machines	PM 21
Digital: Drive and Control Components for Cranes	*CR 1*

Power Supply	
SITOP Power supply	KT 10.1

Safety Integrated	
Safety Technology for Factory Automation	SI 10

SIMATIC HMI / PC-based Automation	
Human Machine Interface Systems/ PC-based Automation	ST 80/ ST PC

SIMATIC Ident	
Industrial Identification Systems	ID 10

SIMATIC Industrial Automation Systems	
Products for Totally Integrated Automation	ST 70
SIMATIC PCS 7 Process Control System System components	ST PCS 7
SIMATIC PCS 7 Process Control System Technology components	ST PCS 7 T
Add-ons for the SIMATIC PCS 7 Process Control System	ST PCS 7 AO

SIMATIC NET	
Industrial Communication	IK PI

SIRIUS Industrial Controls	
SIRIUS Industrial Controls	IC 10

Digital: These catalogs are only available as a PDF.

Information and Download Center

Digital versions of the catalogs are available on the Internet at:
www.siemens.com/industry/infocenter
There you'll find additional catalogs in other languages.

Please note the section "Downloading catalogs" on page "Online services" in the appendix of this catalog.

© Siemens AG 2015

Security information

Siemens provides products and solutions with industrial security functions that support the secure operation of plants, solutions, machines, equipment and/or networks. They are important components in a holistic industrial security concept. With this in mind, Siemens' products and solutions undergo continuous development. Siemens recommends strongly that you regularly check for product updates.

For the secure operation of Siemens products and solutions, it is necessary to take suitable preventive action (e.g. cell protection concept) and integrate each component into a holistic, state-of-the-art industrial security concept. Third-party products that may be in use should also be considered. For more information about industrial security, visit
http://www.siemens.com/industrialsecurity.

To stay informed about product updates as they occur, sign up for a product-specific newsletter. For more information, visit
http://support.automation.siemens.com.

Get more information

Siemens Motors:
www.siemens.com/motors

Local partners worldwide:
www.siemens.com/automation/partner

Please scan the QR code for more information on Siemens Motors.

Siemens AG
Process Industries and Drives
Postfach 4848
90026 NUERNBERG
GERMANY

Subject to change without prior notice
Article No. E86060-K5581-A111-A8-7600
V6.MKKATA.LDT.141 / Dispo 18400
KG 1115 5.0 HOF/AUM 392 En
Printed in Germany
© Siemens AG 2015

The information provided in this catalog contains merely general descriptions or characteristics of performance which in case of actual use do not always apply as described or which may change as a result of further development of the products. An obligation to provide the respective characteristics shall only exist if expressly agreed in the terms of contract.
Availability and technical specifications are subject to change without notice. All product designations may be trademarks or product names of Siemens AG or supplier companies whose use by third parties for their own purposes could violate the rights of the owners.

www.siemens.com/drives

Token fee: 5.00 €